Prepare for installation (SG5600)

StorageGRID

NetApp
February 20, 2024

This PDF was generated from https://docs.netapp.com/us-en/storagegrid-116/sg5600/preparing-site-sg5600.html on February 20, 2024. Always check docs.netapp.com for the latest.

Table of Contents

Prepare for installation (SG5600) . . . 1
- Prepare site (SG5600) . . . 1
- Unpack boxes (SG5600) . . . 1
- Obtain additional equipment and tools (SG5600) . . . 4
- Service laptop requirements . . . 5
- Review appliance network connections (SG5600) . . . 5
- Gather installation information (SG5600) . . . 10

Prepare for installation (SG5600)

Preparing to install a StorageGRID appliance entails preparing the site and obtaining all required hardware, cables, and tools. You should also gather IP addresses and network information.

Related information

Web browser requirements

Prepare site (SG5600)

Before installing the appliance, you must make sure that the site and the cabinet or rack you plan to use meet the specifications for a StorageGRID appliance.

Steps

1. Confirm that the site meets the requirements for temperature, humidity, altitude range, airflow, heat dissipation, wiring, power, and grounding. See the NetApp Hardware Universe for more information.
2. Obtain a 19-inch (48.3-cm) cabinet or rack to fit shelves of this size (without cables):

Appliance model	Height	Width	Depth	Maximum weight
SG5612 (12 drives)	3.40 in. (8.64 cm)	19.0 in. (48.26 cm)	21.75 in. (55.25 cm)	59.5 lb (27 kg)
SG5660 (60 drives)	7.00 in. (17.78 cm)	17.75 in. (45.08 cm)	32.50 in. (82.55 cm)	236.2 lb. (107.1 kg)

3. Install any required network switches. See the NetApp Interoperability Matrix Tool for compatibility information.

Related information

NetApp Hardware Universe

NetApp Interoperability

Unpack boxes (SG5600)

Before installing the StorageGRID appliance, unpack all boxes and compare the contents to the items on the packing slip.

- **SG5660 enclosure, a 4U chassis with 60 drives**

- **SG5612 enclosure, a 2U chassis with 12 drives**

- **4U bezel or 2U endcaps**

- **NL-SAS drives**

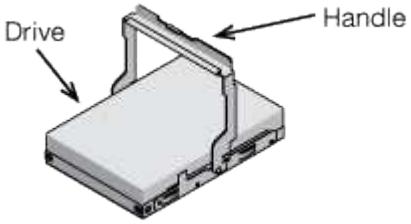

Drives are preinstalled in the 2U SG5612, but not in the 4U SG5660 for shipment safety.

- **E5600SG controller**

- **E2700 controller**

- **Mounting rails and screws**

- **Enclosure handles (4U enclosures only)**

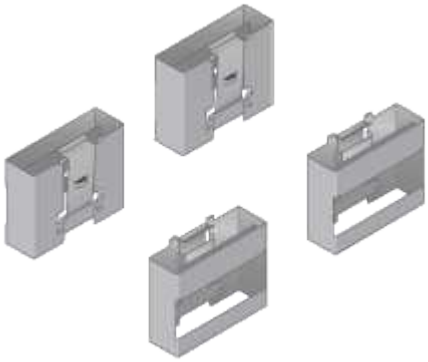

Cables and connectors

The shipment for the StorageGRID appliance includes the following cables and connectors:

- **Power cords for your country**

The appliance ships with two AC power cords for connecting to an external power source, such as a wall plug. Your cabinet might have special power cords that you use instead of the power cords that ship with the appliance.

- **SAS interconnect cables**

Two 0.5-meter SAS interconnect cables with mini-SAS-HD and mini-SAS connectors.

The square connector plugs into the E2700 controller, and the rectangular connector plugs into the E5600SG controller.

Obtain additional equipment and tools (SG5600)

Before installing the SG5600 appliance, confirm you have all of the additional equipment and tools that you need.

- **Screwdrivers**

Phillips No. 2 screwdriver

Medium flat-blade screwdrivers

- **ESD wrist strap**

- **Ethernet cables**

- **Ethernet switch**

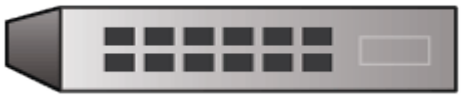

- **Service laptop** Supported web browser

Service laptop requirements

Before you install the StorageGRID appliance hardware, you should check to see if the service laptop has the minimum required resources.

The service laptop, which is needed for the hardware installation, must meet the following requirements:

- Microsoft Windows operating system
- Network port
- Supported web browser
- NetApp SANtricity Storage Manager version 11.40 or later
- SSH client (for example, PuTTY)

Related information

Web browser requirements

NetApp Documentation: SANtricity Storage Manager

Review appliance network connections (SG5600)

Before installing the StorageGRID appliance, you should understand which networks can be connected to the appliance and how the ports on each controller are used.

StorageGRID appliance networks

When you deploy a StorageGRID appliance as a Storage Node, you can connect it to the following networks:

- **Grid Network for StorageGRID**: The Grid Network is used for all internal StorageGRID traffic. It provides connectivity between all nodes in the grid, across all sites and subnets. The Grid Network is required.
- **Admin Network for StorageGRID**: The Admin Network is a closed network used for system administration and maintenance. The Admin Network is typically a private network and does not need to be routable between sites. The Admin Network is optional.
- **Client Network for StorageGRID**: The Client Network is an open network used to provide access to client applications, including S3 and Swift. The Client Network provides client protocol access to the grid, so the Grid Network can be isolated and secured. The Client Network is optional.
- **Management network for SANtricity Storage Manager** (optional): The E2700 controller connects to the management network where SANtricity Storage Manager is installed, allowing you to monitor and manage the hardware components in the appliance. This management network can be the same as the Admin Network for StorageGRID, or it can be an independent management network.

  If the optional SANtricity Storage Manager network is not connected, you might be unable to use some SANtricity features.

For detailed information about StorageGRID networks, see the *Grid Primer*.

StorageGRID appliance connections

When you install a StorageGRID appliance, you must connect the two controllers to each other and to the required networks. The figure shows the two controllers in the SG5660, with the E2700 controller on the top and the E5600SG controller on the bottom. In the SG5612, the E2700 controller is to the left of the E5600SG controller.

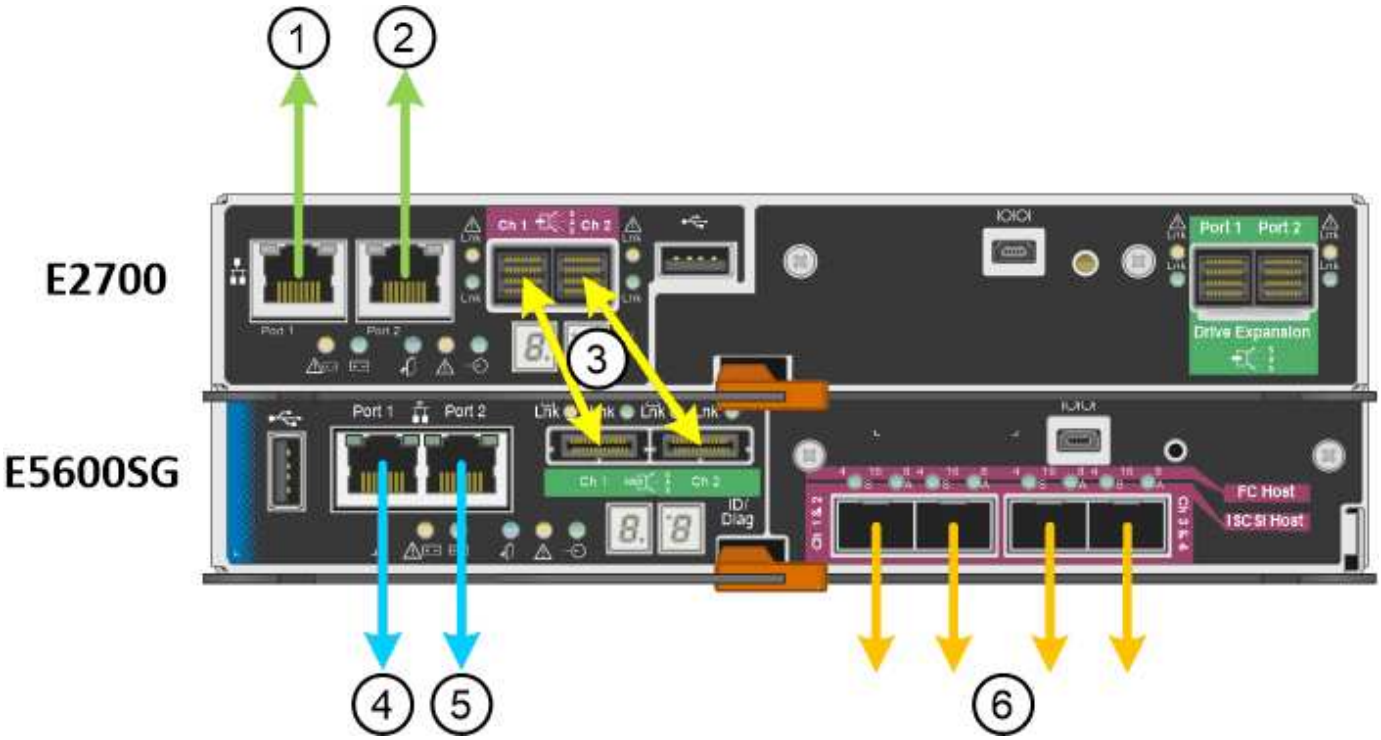

Item	Port	Type of port	Function
1	Management port 1 on the E2700 controller	1-Gb (RJ-45) Ethernet	Connects the E2700 controller to the network where SANtricity Storage Manager is installed.
2	Management port 2 on the E2700 controller	1-Gb (RJ-45) Ethernet	Connects the E2700 controller to a service laptop during installation.
3	Two SAS interconnect ports on each controller, labelled Ch 1 and Ch 2	E2700 controller: mini-SAS-HD E5600SG controller: mini-SAS	Connect the two controllers to each other.
4	Management port 1 on the E5600SG controller	1-Gb (RJ-45) Ethernet	Connects the E5600SG controller to the Admin Network for StorageGRID.
5	Management port 2 on the E5600SG controller	1-Gb (RJ-45) Ethernet	• Can be bonded with management port 1 if you want a redundant connection to the Admin Network. • Can be left unwired and available for temporary local access (IP 169.254.0.1). • Can be used to connect the E5600SG controller to a service laptop during installation, if a DHCP-assigned IP address is not available.
6	Four network ports on the E5600SG controller	10-GbE (optical)	Connect to the Grid Network and the Client Network for StorageGRID. See “10-GbE port connections for the E5600SG controller.”

Related information

Port bond modes for the E5600SG controller ports

Gather installation information (SG5600)

Cable appliance (SG5600)

Networking guidelines

Install VMware

Install Red Hat Enterprise Linux or CentOS

Install Ubuntu or Debian

Port bond modes for the E5600SG controller ports

When configuring network links for the E5600SG controller ports, you can use port bonding for the 10-GbE ports that connect to the Grid Network and optional Client Network, and the 1-GbE management ports that connect to the optional Admin Network. Port bonding helps protect your data by providing redundant paths between StorageGRID networks and the appliance.

Related information

Configure network links (SG5600)

Network bond modes for 10-GbE ports

The 10-GbE networking ports on the E5600SG controller support Fixed port bond mode or Aggregate port bond mode for the Grid Network and Client Network connections.

Fixed port bond mode

Fixed mode is the default configuration for the 10-GbE networking ports.

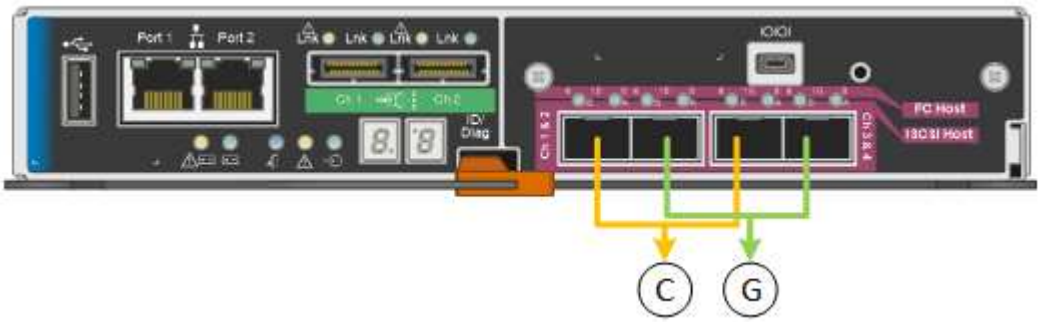

Callout	Which ports are bonded
C	Ports 1 and 3 are bonded together for the Client Network, if this network is used.
G	Ports 2 and 4 are bonded together for the Grid Network.

When using Fixed port bond mode, the ports can be bonded using active-backup mode or Link Aggregation

Control Protocol mode (LACP 802.3ad).

- In active-backup mode (default), only one port is active at a time. If the active port fails, its backup port automatically provides a failover connection. Port 4 provides a backup path for port 2 (Grid Network), and port 3 provides a backup path for port 1 (Client Network).
- In LACP mode, each pair of ports forms a logical channel between the controller and the network, allowing for higher throughput. If one port fails, the other port continues to provide the channel. Throughput is reduced, but connectivity is not impacted.

> If you do not need redundant connections, you can use only one port for each network. However, be aware that an alarm will be raised in the Grid Manager after StorageGRID is installed, indicating that a cable is unplugged. You can safely acknowledge this alarm to clear it.

Aggregate port bond mode

Aggregate port bond mode significantly increases the throughout for each StorageGRID network and provides additional failover paths.

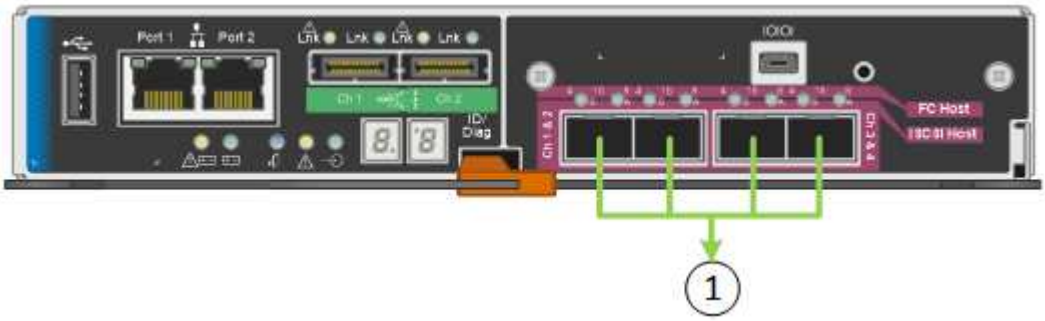

Callout	Which ports are bonded
1	All connected ports are grouped in a single LACP bond, allowing all ports to be used for Grid Network and Client Network traffic.

If you plan to use Aggregate port bond mode:

- You must use LACP network bond mode.
- You must specify a unique VLAN tag for each network. This VLAN tag will be added to each network packet to ensure that network traffic is routed to the correct network.
- The ports must be connected to switches that can support VLAN and LACP. If multiple switches are participating in the LACP bond, the switches must support multi-chassis link aggregation groups (MLAG), or equivalent.
- You must understand how to configure the switches to use VLAN, LACP, and MLAG, or equivalent.

If you do not want to use all four 10-GbE ports, you can use one, two, or three ports. Using more than one port maximizes the chance that some network connectivity will remain available if one of the 10-GbE ports fails.

> If you choose to use fewer than four ports, be aware that a **Services appliance link down** alert might be triggered in the Grid Manager after the appliance node is installed, indicating that a cable is unplugged. You can safely disable this alert rule for the triggered alert. From the Grid Manager, select **ALERTS** > **Rules**, select the rule, and click **Edit rule**. Then, uncheck the **Enabled** check box.

Network bond modes for 1-GbE management ports

For the two 1-GbE management ports on the E5600SG controller, you can choose Independent network bond mode or Active-Backup network bond mode to connect to the optional Admin Network.

In Independent mode, only management port 1 is connected to the Admin Network. This mode does not provide a redundant path. Management port 2 is left unwired and available for temporary local connections (use IP address 169.254.0.1)

In Active-Backup mode, both management ports 1 and 2 are connected to the Admin Network. Only one port is active at a time. If the active port fails, its backup port automatically provides a failover connection. Bonding these two physical ports into one logical management port provides a redundant path to the Admin Network.

> If you need to make a temporary local connection to the E5600SG controller when the 1-GbE management ports are configured for Active-Backup mode, remove the cables from both management ports, plug your temporary cable into management port 2, and access the appliance using IP address 169.254.0.1.

Gather installation information (SG5600)

As you install and configure the StorageGRID appliance, you must make decisions and gather information about Ethernet switch ports, IP addresses, and port and network bond modes.

About this task

You can use the following tables to record information for each network you connect to the appliance. These values are required to install and configure the hardware.

Information needed to connect E2700 controller to SANtricity Storage Manager

You must connect the E2700 controller to the management network you will use for SANtricity Storage Manager.

Information needed	Your value
Ethernet switch port you will connect to management port 1	

Information needed	Your value
MAC address for management port 1 (printed on a label near port P1)	
DHCP-assigned IP address for management port 1, if available after power on **Note:** If the network you will connect to the E2700 controller includes a DHCP server, the network administrator can use the MAC address to determine the IP address that was assigned by the DHCP server.	
Speed and duplex mode **Note:** You must make sure the Ethernet switch for the SANtricity Storage Manager management network is set to autonegotiate.	Must be: • Autonegotiate (default)
IP address format	Choose one: • IPv4 • IPv6
Static IP address you plan to use for the appliance on the management network	For IPv4: • IPv4 address: • Subnet mask: • Gateway: For IPv6: • IPv6 address: • Routable IP address: • E2700 controller router IP address:

Information needed to connect E5600SG controller to Admin Network

The Admin Network for StorageGRID is an optional network, used for system administration and maintenance. The appliance connects to the Admin Network using the 1-GbE management ports on the E5600SG controller.

Information needed	Your value
Admin Network enabled	Choose one: • No • Yes (default)

Information needed	Your value
Network bond mode	Choose one: • Independent • Active-Backup
Switch port for management port 1 (P1)	
Switch port for management port 2 (P2; Active-Backup network bond mode only)	
MAC address for management port 1 (printed on a label near port P1)	
DHCP-assigned IP address for management port 1, if available after power on **Note:** If the Admin Network includes a DHCP server, the E5600SG controller displays the DHCP-assigned IP address on its seven-segment display after it boots up. You can also determine the DHCP-assigned IP address by using the MAC address to look up the assigned IP.	• IPv4 address (CIDR): • Gateway:
Static IP address you plan to use for the appliance Storage Node on the Admin Network **Note:** If your network does not have a gateway, specify the same static IPv4 address for the gateway.	• IPv4 address (CIDR): • Gateway:
Admin Network subnets (CIDR)	

Information needed to connect and configure 10-GbE ports on E5600SG controller

The four 10-GbE ports on the E5600SG controller connect to the StorageGRID Grid Network and Client Network.

See "10-GbE port connections for the E5600SG controller" for more information about the options for these ports.

Information needed	Your value
Port bond mode	Choose one: • Fixed (default) • Aggregate

Information needed	Your value
Switch port for port 1 (Client Network for Fixed mode)	
Switch port for port 2 (Grid Network for Fixed mode)	
Switch port for port 3 (Client Network for Fixed mode)	
Switch port for port 4 (Grid Network for Fixed mode)	

Information needed to connect E5600SG controller to Grid Network

The Grid Network for StorageGRID is a required network, used for all internal StorageGRID traffic. The appliance connects to the Grid Network using the 10-GbE ports on the E5600SG controller.

> See "10-GbE port connections for the E5600SG controller" for more information about the options for these ports.

Information needed	Your value
Network bond mode	Choose one: • Active-Backup (default) • LACP (802.3ad)
VLAN tagging enabled	Choose one: • No (default) • Yes
VLAN tag(if VLAN tagging is enabled)	Enter a value between 0 and 4095:
DHCP-assigned IP address for the Grid Network, if available after power on **Note:** If the Grid Network includes a DHCP server, the E5600SG controller displays the DHCP-assigned IP address for the Grid Network on its seven-segment display after it boots up.	• IPv4 address (CIDR): • Gateway:
Static IP address you plan to use for the appliance Storage Node on the Grid Network **Note:** If your network does not have a gateway, specify the same static IPv4 address for the gateway.	• IPv4 address (CIDR): • Gateway:

Information needed	Your value
Grid Network subnets (CIDR) **Note:** If the Client Network is not enabled, the default route on the controller will use the gateway specified here.	

Information needed to connect E5600SG controller to Client Network

The Client Network for StorageGRID is an optional network, used to provides client protocol access to the grid. The appliance connects to the Client Network using the 10-GbE ports on the E5600SG controller.

> See "10-GbE port connections for the E5600SG controller" for more information about the options for these ports.

Information needed	Your value
Client Network enabled	Choose one: • No (default) • Yes
Network bond mode	Choose one: • Active-Backup (default) • LACP (802.3ad)
VLAN tagging enabled	Choose one: • No (default) • Yes
VLAN tag(if VLAN tagging is enabled)	Enter a value between 0 and 4095:
DHCP-assigned IP address for the Client Network, if available after power on	• IPv4 address (CIDR): • Gateway:
Static IP address you plan to use for the appliance Storage Node on the Client Network **Note:** If the Client Network is enabled, the default route on the controller will use the gateway specified here.	• IPv4 address (CIDR): • Gateway:

Related information

Review appliance network connections (SG5600)

Configure hardware (SG5600)

Port bond modes for E5600SG controller ports

Copyright information

Copyright © 2024 NetApp, Inc. All Rights Reserved. Printed in the U.S. No part of this document covered by copyright may be reproduced in any form or by any means—graphic, electronic, or mechanical, including photocopying, recording, taping, or storage in an electronic retrieval system—without prior written permission of the copyright owner.

Software derived from copyrighted NetApp material is subject to the following license and disclaimer:

THIS SOFTWARE IS PROVIDED BY NETAPP “AS IS” AND WITHOUT ANY EXPRESS OR IMPLIED WARRANTIES, INCLUDING, BUT NOT LIMITED TO, THE IMPLIED WARRANTIES OF MERCHANTABILITY AND FITNESS FOR A PARTICULAR PURPOSE, WHICH ARE HEREBY DISCLAIMED. IN NO EVENT SHALL NETAPP BE LIABLE FOR ANY DIRECT, INDIRECT, INCIDENTAL, SPECIAL, EXEMPLARY, OR CONSEQUENTIAL DAMAGES (INCLUDING, BUT NOT LIMITED TO, PROCUREMENT OF SUBSTITUTE GOODS OR SERVICES; LOSS OF USE, DATA, OR PROFITS; OR BUSINESS INTERRUPTION) HOWEVER CAUSED AND ON ANY THEORY OF LIABILITY, WHETHER IN CONTRACT, STRICT LIABILITY, OR TORT (INCLUDING NEGLIGENCE OR OTHERWISE) ARISING IN ANY WAY OUT OF THE USE OF THIS SOFTWARE, EVEN IF ADVISED OF THE POSSIBILITY OF SUCH DAMAGE.

NetApp reserves the right to change any products described herein at any time, and without notice. NetApp assumes no responsibility or liability arising from the use of products described herein, except as expressly agreed to in writing by NetApp. The use or purchase of this product does not convey a license under any patent rights, trademark rights, or any other intellectual property rights of NetApp.

The product described in this manual may be protected by one or more U.S. patents, foreign patents, or pending applications.

LIMITED RIGHTS LEGEND: Use, duplication, or disclosure by the government is subject to restrictions as set forth in subparagraph (b)(3) of the Rights in Technical Data -Noncommercial Items at DFARS 252.227-7013 (FEB 2014) and FAR 52.227-19 (DEC 2007).

Data contained herein pertains to a commercial product and/or commercial service (as defined in FAR 2.101) and is proprietary to NetApp, Inc. All NetApp technical data and computer software provided under this Agreement is commercial in nature and developed solely at private expense. The U.S. Government has a non-exclusive, non-transferrable, nonsublicensable, worldwide, limited irrevocable license to use the Data only in connection with and in support of the U.S. Government contract under which the Data was delivered. Except as provided herein, the Data may not be used, disclosed, reproduced, modified, performed, or displayed without the prior written approval of NetApp, Inc. United States Government license rights for the Department of Defense are limited to those rights identified in DFARS clause 252.227-7015(b) (FEB 2014).

Trademark information

NETAPP, the NETAPP logo, and the marks listed at http://www.netapp.com/TM are trademarks of NetApp, Inc. Other company and product names may be trademarks of their respective owners.