View SG5700 boot-up status codes

StorageGRID

NetApp
February 20, 2024

This PDF was generated from https://docs.netapp.com/us-en/storagegrid-116/sg5700/status-indicators-on-e5700sg-controller.html on February 20, 2024. Always check docs.netapp.com for the latest.

Table of Contents

View SG5700 boot-up status codes 1
Status indicators on E5700SG controller 2

View SG5700 boot-up status codes

The seven-segment displays on each controller show status and error codes as the appliance powers up.

About this task

The E2800 controller and the E5700SG controller display different statuses and error codes.

To understand what these codes mean, see the following resources:

Controller	Reference
E2800 controller	*E5700 and E2800 System Monitoring Guide* **Note:** The codes listed for the E-Series E5700 controller do not apply to the E5700SG controller in the appliance.
E5700SG controller	“Status indicators on the E5700SG controller”

Steps

1. During boot-up, monitor progress by viewing the codes shown on the seven-segment displays.
   - The seven-segment display on the E2800 controller shows the repeating sequence **OS**, **Sd**, ***blank*** to indicate that it is performing start-of-day processing.
   - The seven-segment display on the E5700SG controller shows a sequence of codes, ending with **AA** and **FF**.
2. After the controllers have booted up, confirm the seven-segment displays show the following:

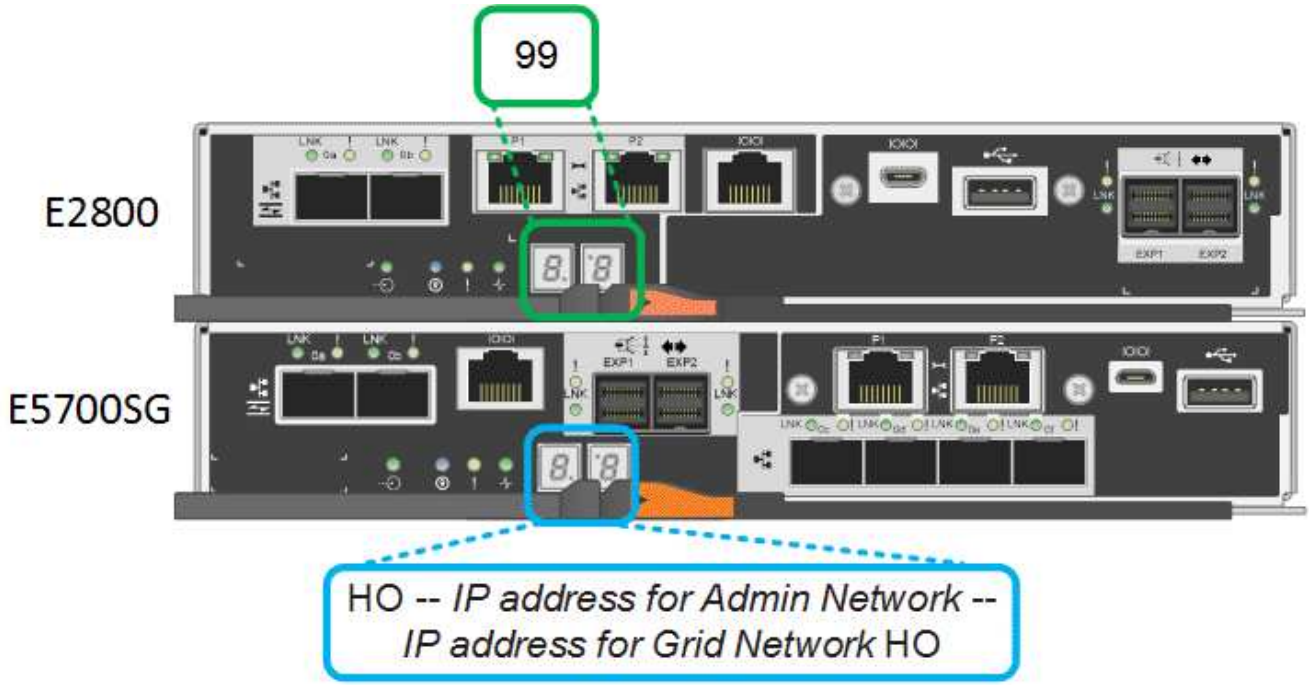

Controller	Seven-segment display
E2800 controller	Shows 99, which is the default ID for an E-Series controller shelf.
E5700SG controller	Shows **HO**, followed by a repeating sequence of two numbers. `HO -- IP address for Admin Network -- IP address for Grid Network HO` In the sequence, the first set of numbers is the DHCP-assigned IP address for the controller's management port 1. This address is used to connect the controller to the Admin Network for StorageGRID. The second set of numbers is the DHCP-assigned IP address used to connect the appliance to the Grid Network for StorageGRID. **Note:** If an IP address could not be assigned using DHCP, 0.0.0.0 is displayed.

3. If the seven-segment displays show other values, see Troubleshoot hardware installation (SG5700) and confirm you completed the installation steps correctly. If you are unable to resolve the problem, contact technical support.

Related information

Status indicators on the E5700SG controller

E5700 and E2800 System Monitoring Guide

Status indicators on E5700SG controller

The seven-segment display and the LEDs on the E5700SG controller show status and error codes while the appliance powers up and while the hardware is initializing. You can use these displays to determine status and troubleshoot errors.

After the StorageGRID Appliance Installer has started, you should periodically review the status indicators on the E5700SG controller.

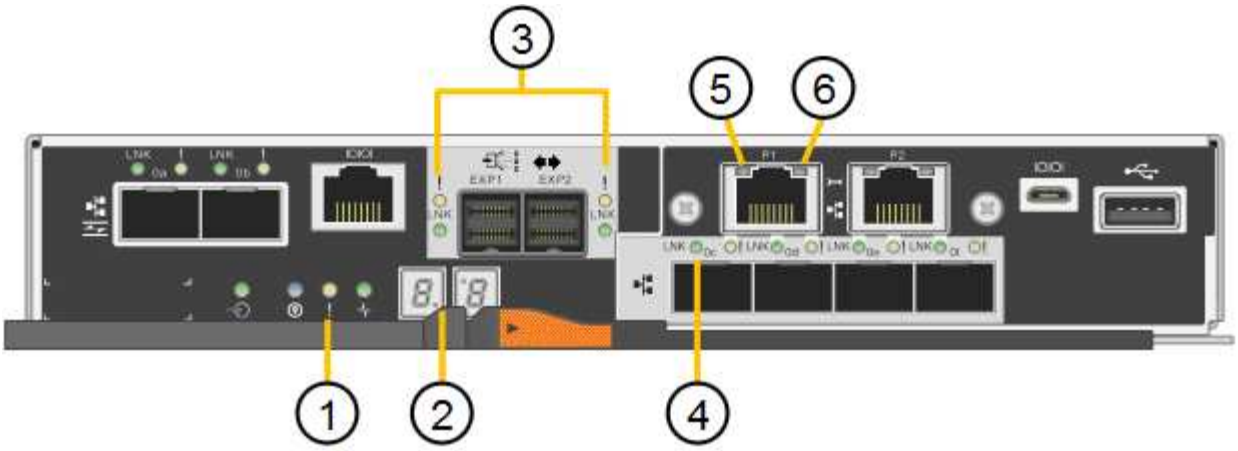

	Display	Description
1	Attention LED	Amber: The controller is faulty and requires operator attention, or the installation script was not found. Off: The controller is operating normally.
2	Seven-segment display	Shows a diagnostic code Seven-segment display sequences enable you to understand errors and the operational state of the appliance.
3	Expansion Port Attention LEDs	Amber: These LEDs are always amber (no link established) because the appliance does not use the expansion ports.
4	Host Port Link Status LEDs	Green: The link is up. Off: The link is down.
5	Ethernet Link State LEDs	Green: A link is established. Off: No link is established.

	Display	Description
6	Ethernet Activity LEDs	Green: The link between the management port and the device to which it is connected (such as an Ethernet switch) is up. Off: There is no link between the controller and the connected device. Blinking Green: There is Ethernet activity.

General boot-up codes

During boot-up or after a hard reset of the appliance, the following occurs:

1. The seven-segment display on the E5700SG controller shows a general sequence of codes that is not specific to the controller. The general sequence ends with the codes AA and FF.
2. Boot-up codes that are specific to the E5700SG controller appear.

E5700SG controller boot-up codes

During a normal boot-up of the appliance, the seven-segment display on the E5700SG controller shows the following codes in the order listed:

Code	Indicates
HI	The master boot script has started.
PP	The system is checking to see if the FPGA needs to be updated.
HP	The system is checking to see if the 10/25-GbE controller firmware needs to be updated.
RB	The system is rebooting after applying firmware updates.
FP	The hardware subsystem firmware update checks have been completed. Inter-controller communication services are starting.

Code	Indicates
HE	The system is awaiting connectivity with the E2800 controller and synchronizing with the SANtricity operating system. **Note:** If this boot procedure does not progress past this stage, check the connections between the two controllers.
HC	The system is checking for existing StorageGRID installation data.
HO	The StorageGRID Appliance Installer is running.
HA	StorageGRID is running.

E5700SG controller error codes

These codes represent error conditions that might be shown on the E5700SG controller as the appliance boots up. Additional two-digit hexadecimal codes are displayed if specific low-level hardware errors occur. If any of these codes persists for more than a second or two, or if you are unable to resolve the error by following one of the prescribed troubleshooting procedures, contact technical support.

Code	Indicates
22	No master boot record found on any boot device.
23	The internal flash disk is not connected.
2A, 2B	Stuck bus, unable to read DIMM SPD data.
40	Invalid DIMMs.
41	Invalid DIMMs.
42	Memory test failed.
51	SPD reading failure.
92 to 96	PCI bus initialization.
A0 to A3	SATA drive initialization.
AB	Alternate boot code.
AE	Booting OS.

Code	Indicates
EA	DDR4 training failed.
E8	No memory installed.
EU	The installation script was not found.
EP	Installation or communication with the E2800 controller has failed.

Related information

Troubleshoot hardware installation (SG5700)

NetApp Support

Copyright information

Copyright © 2024 NetApp, Inc. All Rights Reserved. Printed in the U.S. No part of this document covered by copyright may be reproduced in any form or by any means—graphic, electronic, or mechanical, including photocopying, recording, taping, or storage in an electronic retrieval system—without prior written permission of the copyright owner.

Software derived from copyrighted NetApp material is subject to the following license and disclaimer:

THIS SOFTWARE IS PROVIDED BY NETAPP “AS IS” AND WITHOUT ANY EXPRESS OR IMPLIED WARRANTIES, INCLUDING, BUT NOT LIMITED TO, THE IMPLIED WARRANTIES OF MERCHANTABILITY AND FITNESS FOR A PARTICULAR PURPOSE, WHICH ARE HEREBY DISCLAIMED. IN NO EVENT SHALL NETAPP BE LIABLE FOR ANY DIRECT, INDIRECT, INCIDENTAL, SPECIAL, EXEMPLARY, OR CONSEQUENTIAL DAMAGES (INCLUDING, BUT NOT LIMITED TO, PROCUREMENT OF SUBSTITUTE GOODS OR SERVICES; LOSS OF USE, DATA, OR PROFITS; OR BUSINESS INTERRUPTION) HOWEVER CAUSED AND ON ANY THEORY OF LIABILITY, WHETHER IN CONTRACT, STRICT LIABILITY, OR TORT (INCLUDING NEGLIGENCE OR OTHERWISE) ARISING IN ANY WAY OUT OF THE USE OF THIS SOFTWARE, EVEN IF ADVISED OF THE POSSIBILITY OF SUCH DAMAGE.

NetApp reserves the right to change any products described herein at any time, and without notice. NetApp assumes no responsibility or liability arising from the use of products described herein, except as expressly agreed to in writing by NetApp. The use or purchase of this product does not convey a license under any patent rights, trademark rights, or any other intellectual property rights of NetApp.

The product described in this manual may be protected by one or more U.S. patents, foreign patents, or pending applications.

LIMITED RIGHTS LEGEND: Use, duplication, or disclosure by the government is subject to restrictions as set forth in subparagraph (b)(3) of the Rights in Technical Data -Noncommercial Items at DFARS 252.227-7013 (FEB 2014) and FAR 52.227-19 (DEC 2007).

Data contained herein pertains to a commercial product and/or commercial service (as defined in FAR 2.101) and is proprietary to NetApp, Inc. All NetApp technical data and computer software provided under this Agreement is commercial in nature and developed solely at private expense. The U.S. Government has a non-exclusive, non-transferrable, nonsublicensable, worldwide, limited irrevocable license to use the Data only in connection with and in support of the U.S. Government contract under which the Data was delivered. Except as provided herein, the Data may not be used, disclosed, reproduced, modified, performed, or displayed without the prior written approval of NetApp, Inc. United States Government license rights for the Department of Defense are limited to those rights identified in DFARS clause 252.227-7015(b) (FEB 2014).

Trademark information

NETAPP, the NETAPP logo, and the marks listed at http://www.netapp.com/TM are trademarks of NetApp, Inc. Other company and product names may be trademarks of their respective owners.