Cable appliance

StorageGRID 11.7

NetApp
March 05, 2024

This PDF was generated from https://docs.netapp.com/us-en/storagegrid-117/installconfig/cabling-appliance-sgf6112.html on March 05, 2024. Always check docs.netapp.com for the latest.

Table of Contents

Cable appliance 1
Cable appliance (SGF6112) 1
Cable appliance (SG6000) 3
Cable appliance (SG5700) 7
Cable appliance (SG100 and SG1000) 10

Cable appliance

Cable appliance (SGF6112)

You connect the management port on the appliance to the service laptop and connect the network ports on the appliance to the Grid Network and optional Client Network for StorageGRID.

Before you begin

- You have an RJ-45 Ethernet cable for connecting the management port.
- You have one of the following options for the network ports. These items aren't provided with the appliance.
  - One to four TwinAx cables for connecting the four network ports.
  - One to four SFP+ or SFP28 transceivers if you plan to use optical cables for the ports.

> **Risk of exposure to laser radiation** — Don't disassemble or remove any part of an SFP transceiver. You might be exposed to laser radiation.

About this task

The following figures show the ports on the back of the SGF6112.

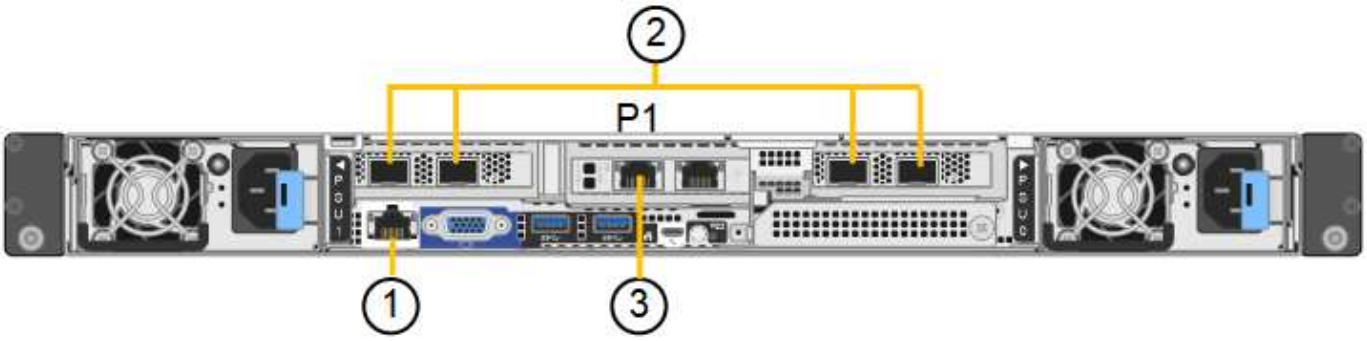

Callout	Port	Type of port	Use
1	BMC management port on the appliance	1-GbE (RJ-45)	Connects to the network where you access the BMC interface.
2	Four 10/25-GbE network ports on the appliance		Connect to the Grid Network and the Client Network for StorageGRID.
3	Admin Network port on the appliance (labeled P1 in the figure)	1-GbE (RJ-45) **Important:** This port operates only at 1/10-GbE (RJ-45) and does not support 100-megabit speeds.	Connects the appliance to the Admin Network for StorageGRID.

Callout	Port	Type of port	Use
	Rightmost RJ-45 port on the appliance	1-GbE (RJ-45) **Important:** This port operates only at 1/10-GbE (RJ-45) and does not support 100-megabit speeds.	• Can be bonded with management port 1 if you want a redundant connection to the Admin Network. • Can be left disconnected and available for temporary local access (IP 169.254.0.1). • During installation, can be used to connect the appliance to a service laptop if DHCP-assigned IP addresses aren't available.

Steps

1. Connect the BMC management port on the appliance to the management network, using an Ethernet cable.

   Although this connection is optional, it is recommended to facilitate support.

2. Connect the network ports on the appliance to the appropriate network switches, using TwinAx cables or optical cables and transceivers.

   All four network ports must use the same link speed.

SGF6112 link speed (GbE)	Required equipment
10	SFP+ transceiver
25	SFP28 transceiver

   - If you plan to use Fixed port bond mode (default), connect the ports to the StorageGRID Grid and Client Networks, as shown in the table.

Port	Connects to…
Port 1	Client Network (optional)
Port 2	Grid Network
Port 3	Client Network (optional)
Port 4	Grid Network

   - If you plan to use the Aggregate port bond mode, connect one or more of the network ports to one or more switches. You should connect at least two of the four ports to avoid having a single point of failure. If you use more than one switch for a single LACP bond, the switches must support MLAG or equivalent.

3. If you plan to use the Admin Network for StorageGRID, connect the Admin Network port on the appliance

to the Admin Network, using an Ethernet cable.

Cable appliance (SG6000)

You connect the storage controllers to the SG6000-CN controller, connect the management ports on all three controllers, and connect the network ports on the SG6000-CN controller to the Grid Network and optional Client Network for StorageGRID.

Before you begin

- You have the four optical cables provided with the appliance for connecting the two storage controllers to the SG6000-CN controller.
- You have RJ-45 Ethernet cables (four minimum) for connecting the management ports.
- You have one of the following options for the network ports. These items aren't provided with the appliance.
  - One to four TwinAx cables for connecting the four network ports.
  - One to four SFP+ or SFP28 transceivers if you plan to use optical cables for the ports.

> **Risk of exposure to laser radiation** — Don't disassemble or remove any part of an SFP transceiver. You might be exposed to laser radiation.

About this task

The following figures show the three controllers in the SG6060 and SG6060X appliances, with the SG6000-CN compute controller on the top and the two E2800 storage controllers on the bottom. The SG6060 uses E2800A controllers, and the SG6060X uses E2800B controllers.

> Both versions of the E2800 controller have identical specifications and function except for the location of the interconnect ports.

> Don't use an E2800A and E2800B controller in the same appliance.

SG6060 connections:

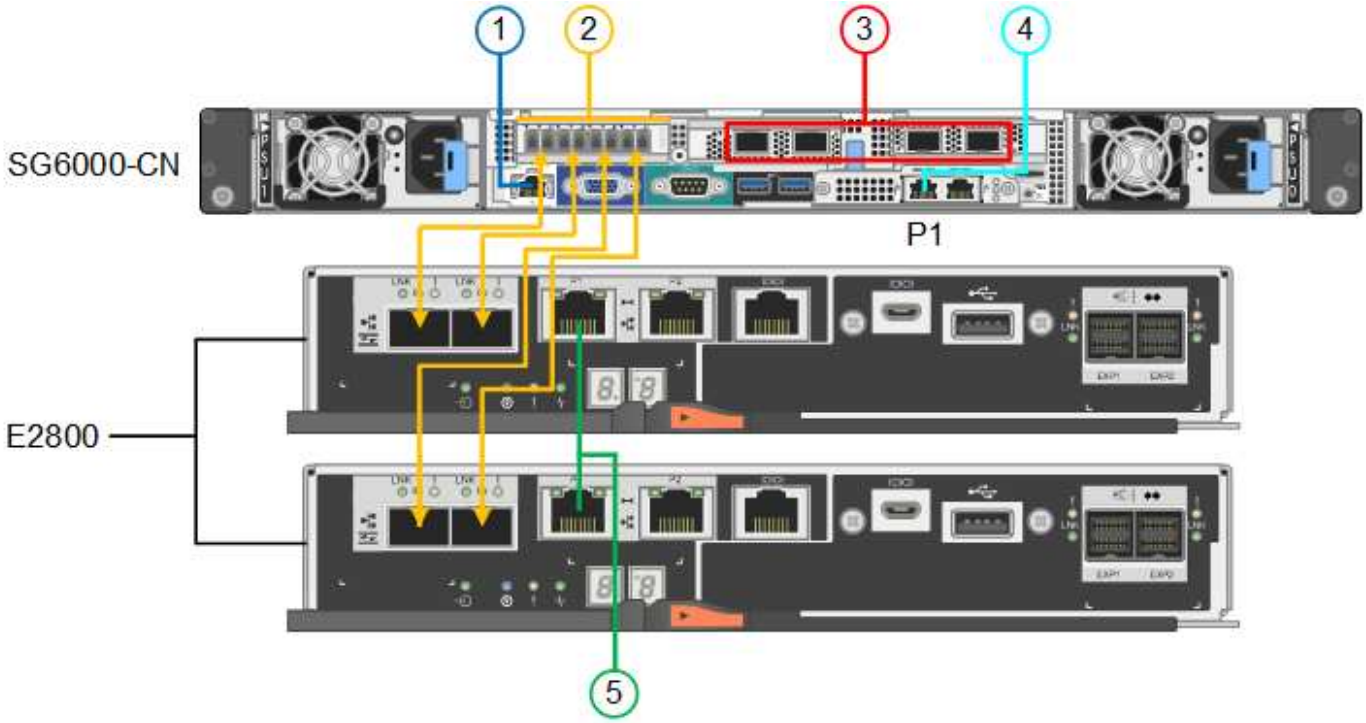

SG6060X connections:

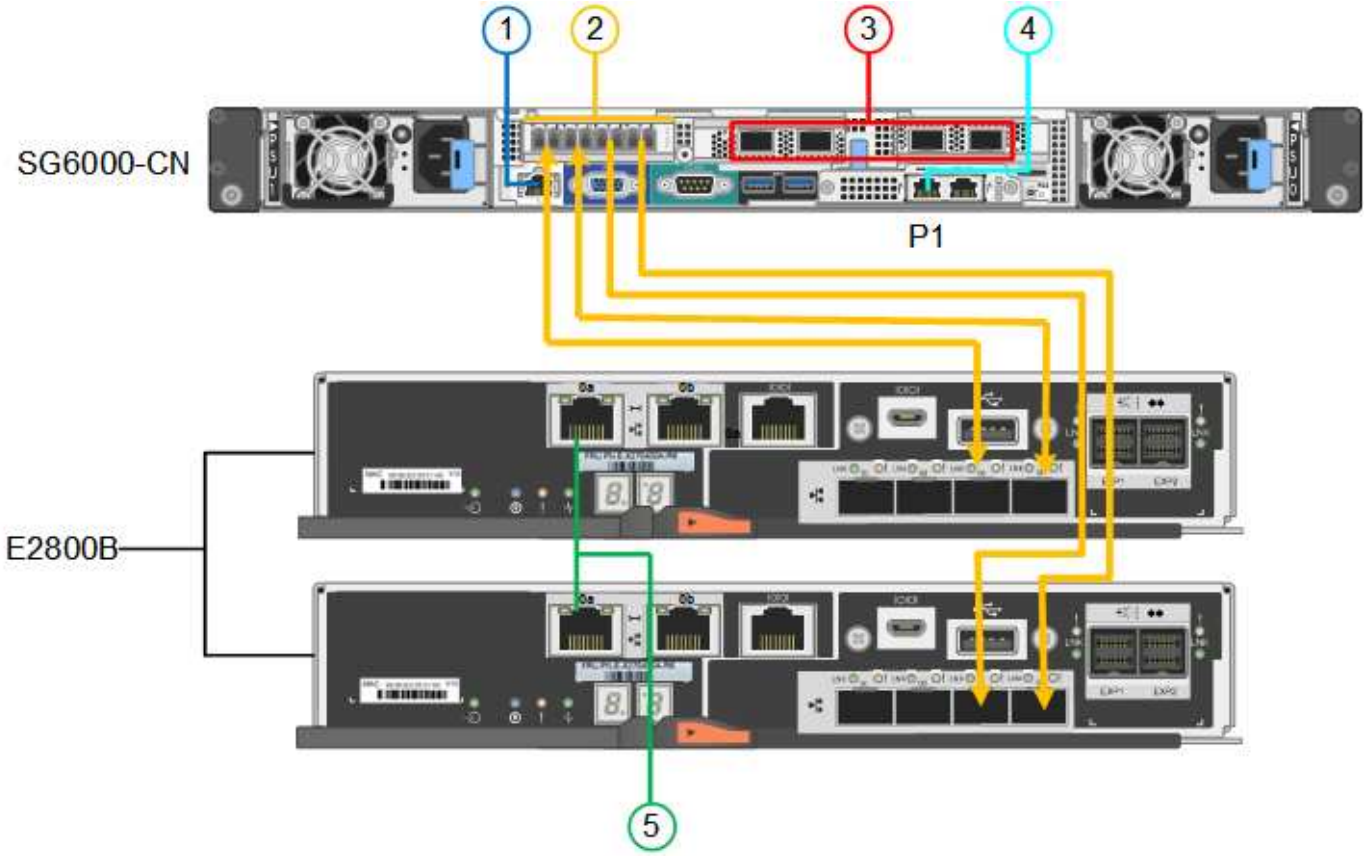

The following figure shows the three controllers in the SGF6024 appliance, with the SG6000-CN compute controller on the top and the two EF570 storage controllers side by side below the compute controller.

SGF6024 connections:

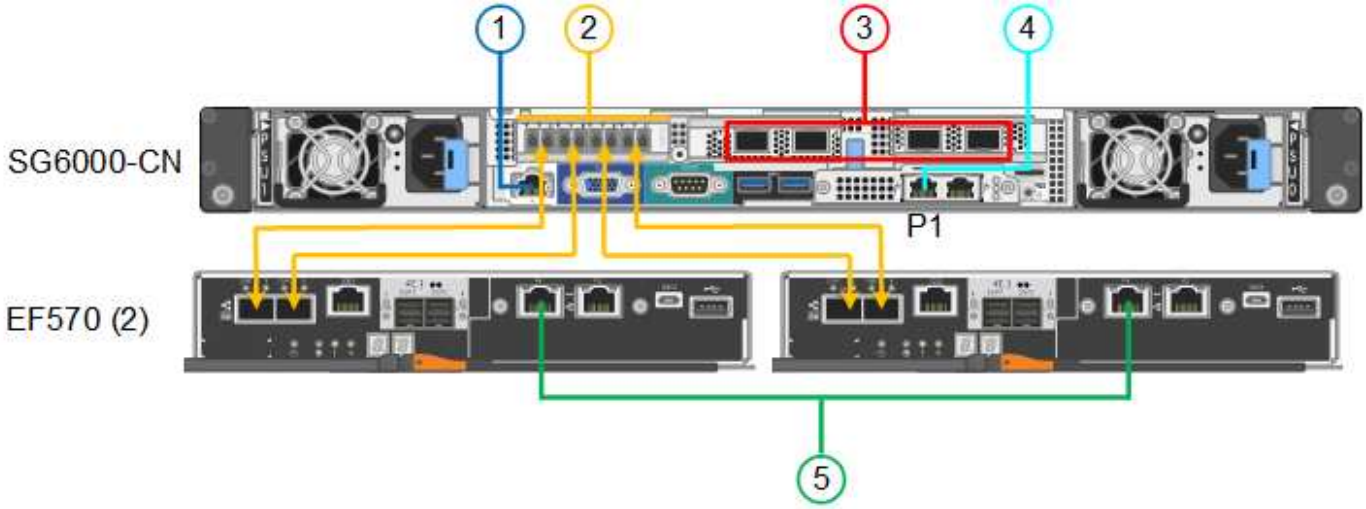

Callout	Port	Type of port	Use
1	BMC management port on the SG6000-CN controller	1-GbE (RJ-45)	Connects to the network where you access the BMC interface.
2	FC connection ports: • 4 on the SG6000-CN controller • 2 on each storage controller	16-Gb/s FC optical SFP+	Connect each storage controller to the SG6000-CN controller.
3	Four network ports on the SG6000-CN controller	10/25-GbE	Connect to the Grid Network and the Client Network for StorageGRID.
4	Admin Network port on the SG6000-CN controller (labeled P1 in the figure)	1-GbE (RJ-45) **Important:** This port operates only at 1000 baseT/full and does not support 10- or 100-megabit speeds.	Connects the SG6000-CN controller to the Admin Network for StorageGRID.
	Rightmost RJ-45 port on the SG6000-CN controller	1-GbE (RJ-45) **Important:** This port operates only at 1000 baseT/full and does not support 10- or 100-megabit speeds.	• Can be bonded with management port 1 if you want a redundant connection to the Admin Network. • Can be left unwired and available for temporary local access (IP 169.254.0.1). • During installation, can be used to connect the SG6000-CN controller to a service laptop if DHCP-assigned IP addresses aren't available.

Callout	Port	Type of port	Use
5	Management port 1 on each storage controller	1-GbE (RJ-45)	Connects to the network where you access SANtricity System Manager.
	Management port 2 on each storage controller	1-GbE (RJ-45)	Reserved for technical support.

Steps

1. Connect the BMC management port on the SG6000-CN controller to the management network, using an Ethernet cable.

   Although this connection is optional, it is recommended to facilitate support.

2. Connect the two FC ports on each storage controller to the FC ports on the SG6000-CN controller, using four optical cables and four SFP+ transceivers for the storage controllers.
3. Connect the network ports on the SG6000-CN controller to the appropriate network switches, using TwinAx cables or optical cables and SFP+ or SFP28 transceivers.

   > The four network ports must use the same link speed. Install SFP+ transceivers if you plan to use 10-GbE link speeds. Install SFP28 transceivers if you plan to use 25-GbE link speeds.

   - If you plan to use Fixed port bond mode (default), connect the ports to the StorageGRID Grid and Client Networks, as shown in the table.

Port	Connects to…
Port 1	Client Network (optional)
Port 2	Grid Network
Port 3	Client Network (optional)
Port 4	Grid Network

   - If you plan to use the Aggregate port bond mode, connect one or more of the network ports to one or more switches. You should connect at least two of the four ports to avoid having a single point of failure. If you use more than one switch for a single LACP bond, the switches must support MLAG or equivalent.
4. If you plan to use the Admin Network for StorageGRID, connect the Admin Network port on the SG6000-CN controller to the Admin Network, using an Ethernet cable.
5. If you plan to use the management network for SANtricity System Manager, connect management port 1 (P1) on each storage controller (the RJ-45 port on the left) to the management network for SANtricity System Manager, using an Ethernet cable.

   Don’t use management port 2 (P2) on the storage controllers (the RJ-45 port on the right). This port is reserved for technical support.

Related information

Port bond modes (SG6000-CN controller)

Cable appliance (SG5700)

You connect the two controllers to each other, connect the management ports on each controller, and connect the 10/25-GbE ports on the E5700SG controller to the Grid Network and optional Client Network for StorageGRID.

Before you begin

- You have unpacked the following items, which are included with the appliance:
  - Two power cords.
  - Two optical cables for the FC interconnect ports on the controllers.
  - Eight SFP+ transceivers, which support either 10-GbE or 16-Gbps FC. The transceivers can be used with the two interconnect ports on both controllers and with the four 10/25-GbE network ports on the E5700SG controller, assuming you want the network ports to use a 10-GbE link speed.
- You have obtained the following items, which aren't included with the appliance:
  - One to four optical cables for the 10/25-GbE ports you plan to use.
  - One to four SFP28 transceivers, if you plan to use 25-GbE link speed.
  - Ethernet cables for connecting the management ports.

Risk of exposure to laser radiation — Don't disassemble or remove any part of an SFP transceiver. You might be exposed to laser radiation.

About this task

The figures show the two controllers in the SG5760 and SG5760X, with the E2800 series storage controller on the top and the E5700SG controller on the bottom. In the SG5712 and SG5712X, the E2800 series storage controller is to the left of the E5700SG controller when viewed from the back.

SG5760 connections:

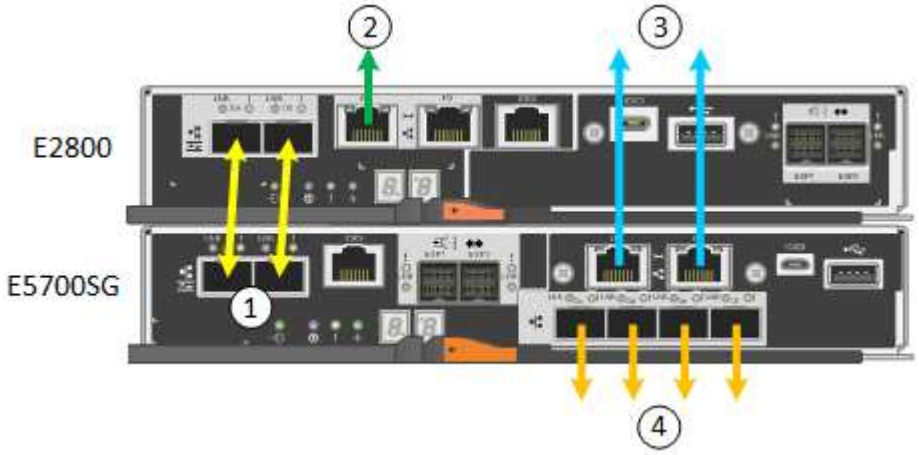

SG5760X connections:

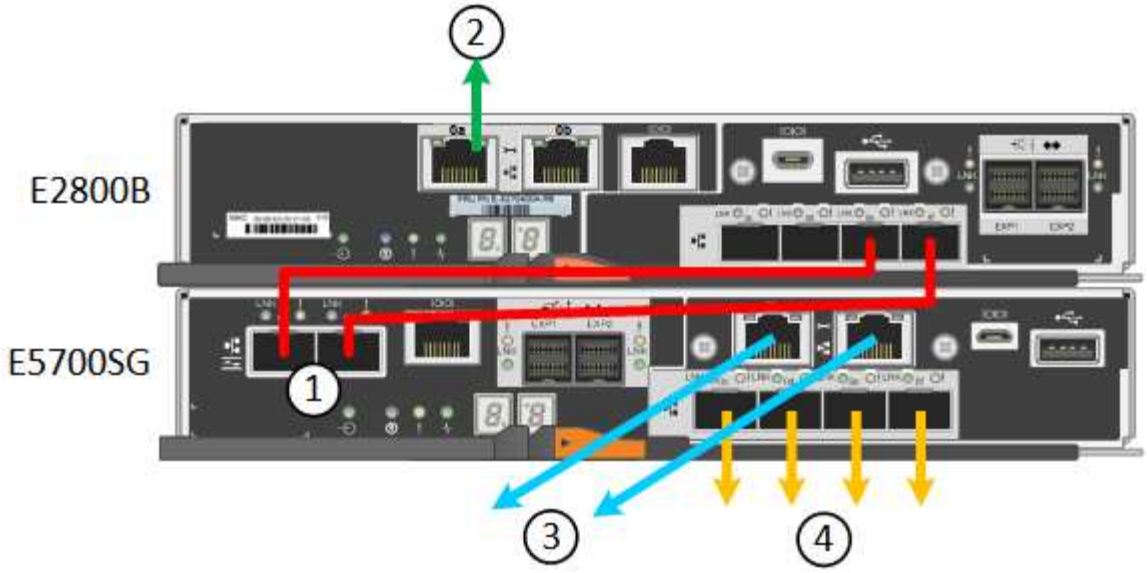

Callout	Port	Type of port	Use
1	Two interconnect ports on each controller	16Gb/s FC optical SFP+	Connect the two controllers to each other.
2	Management port 1 on the E2800 series controller	1-GbE (RJ-45)	Connects to the network where you access SANtricity System Manager. You can use the Admin Network for StorageGRID or an independent management network.
2	Management port 2 on the E2800 series controller	1-GbE (RJ-45)	Reserved for technical support.
3	Management port 1 on the E5700SG controller	1-GbE (RJ-45)	Connects the E5700SG controller to the Admin Network for StorageGRID.

Callout	Port	Type of port	Use
3	Management port 2 on the E5700SG controller	1-GbE (RJ-45)	• Can be bonded with management port 1 if you want a redundant connection to the Admin Network. • Can be left unwired and available for temporary local access (IP 169.254.0.1). • During installation, can be used to connect the E5700SG controller to a service laptop if DHCP-assigned IP addresses aren't available.
4	10/25-GbE ports 1-4 on the E5700SG controller	10-GbE or 25-GbE **Note:** The SFP+ transceivers included with the appliance support 10-GbE link speeds. If you want to use 25-GbE link speeds for the four network ports, you must provide SFP28 transceivers.	Connect to the Grid Network and the Client Network for StorageGRID. See Port bond modes (E5700SG controller).

Steps

1. Connect the E2800 controller to the E5700SG controller, using two optical cables and four of the eight SFP+ transceivers.

Connect this port…	To this port…
Interconnect port 1 on the E2800 controller	Interconnect port 1 on the E5700SG controller
Interconnect port 2 on the E2800 controller	Interconnect port 2 on the E5700SG controller

2. If you plan to use SANtricity System Manager, connect management port 1 (P1) on the E2800 controller (the RJ-45 port on the left) to the management network for SANtricity System Manager, using an Ethernet cable.

   Don't use management port 2 (P2) on the E2800 controller (the RJ-45 port on the right). This port is reserved for technical support.

3. If you plan to use the Admin Network for StorageGRID, connect management port 1 on the E5700SG controller (the RJ-45 port on the left) to the Admin Network, using an Ethernet cable.

   If you plan to use active-backup network bond mode for the Admin Network, connect management port 2 on the E5700SG controller (the RJ-45 port on the right) to the Admin Network, using an Ethernet cable.

4. Connect the 10/25-GbE ports on the E5700SG controller to the appropriate network switches, using optical cables and SFP+ or SFP28 transceivers.

> All ports must use the same link speed. Install SFP+ transceivers if you plan to use 10-GbE link speeds. Install SFP28 transceivers if you plan to use 25-GbE link speeds.

   - If you plan to use Fixed port bond mode (default), connect the ports to the StorageGRID Grid and Client Networks, as shown in the table.

Port	Connects to…
Port 1	Client Network (optional)
Port 2	Grid Network
Port 3	Client Network (optional)
Port 4	Grid Network

   - If you plan to use the Aggregate port bond mode, connect one or more of the network ports to one or more switches. You should connect at least two of the four ports to avoid having a single point of failure. If you use more than one switch for a single LACP bond, the switches must support MLAG or equivalent.

Related information

Access StorageGRID Appliance Installer

Cable appliance (SG100 and SG1000)

You must connect the management port on the appliance to the service laptop and connect the network ports on the appliance to the Grid Network and optional Client Network for StorageGRID.

Before you begin

- You have an RJ-45 Ethernet cable for connecting the management port.
- You have one of the following options for the network ports. These items aren't provided with the appliance.
  - One to four TwinAx cables for connecting the four network ports.
  - For the SG100, one to four SFP+ or SFP28 transceivers if you plan to use optical cables for the ports.
  - For the SG1000, one to four QSFP+ or QSFP28 transceivers if you plan to use optical cables for the ports.

> **Risk of exposure to laser radiation** — Don't disassemble or remove any part of a SFP or QSFP transceiver. You might be exposed to laser radiation.

About this task

The following figures show the ports on the back of the appliance.

SG100 port connections:

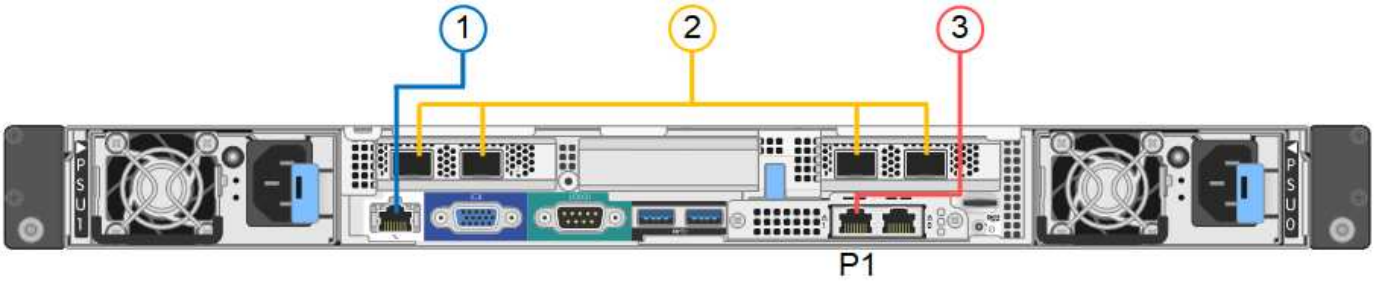

SG1000 port connections:

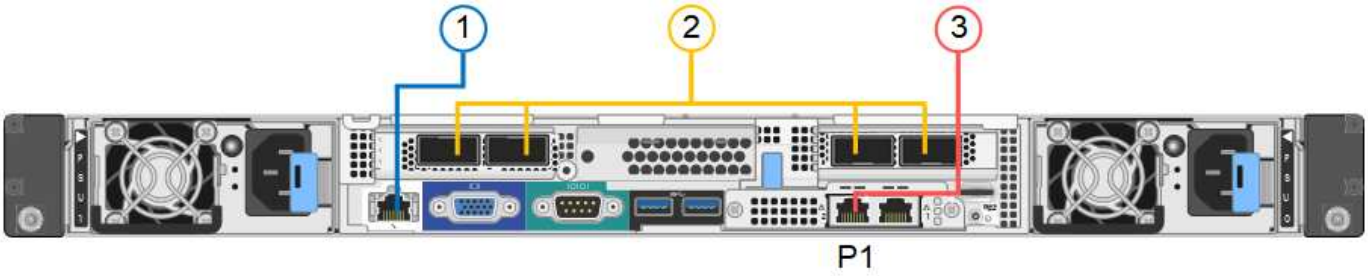

Callout	Port	Type of port	Use
1	BMC management port on the appliance	1-GbE (RJ-45)	Connects to the network where you access the BMC interface.
2	Four network ports on the appliance	• For the SG100: 10/25-GbE • For the SG1000: 10/25/40/100-GbE	Connect to the Grid Network and the Client Network for StorageGRID.
3	Admin Network port on the appliance (labeled P1 in the figures)	1-GbE (RJ-45) **Important:** This port operates only at 1000 baseT/full and does not support 10- or 100-megabit speeds.	Connects the appliance to the Admin Network for StorageGRID.
	Rightmost RJ-45 port on the appliance	1-GbE (RJ-45) **Important:** This port operates only at 1000 baseT/full and does not support 10- or 100-megabit speeds.	• Can be bonded with management port 1 if you want a redundant connection to the Admin Network. • Can be left disconnected and available for temporary local access (IP 169.254.0.1). • During installation, can be used to connect the appliance to a service laptop if DHCP-assigned IP addresses aren't available.

Steps

1. Connect the BMC management port on the appliance to the management network, using an Ethernet cable.

   Although this connection is optional, it is recommended to facilitate support.

2. Connect the network ports on the appliance to the appropriate network switches, using TwinAx cables or optical cables and transceivers.

   All four network ports must use the same link speed. See the following table for the equipment required for your hardware and link speed.

SG100 link speed (GbE)	Required equipment
10	SFP+ transceiver
25	SFP28 transceiver
SG1000 link speed (GbE)	**Required equipment**
10	QSA and SFP+ transceiver
25	QSA and SFP28 transceiver
40	QSFP+ transceiver
100	QFSP28 transceiver

   - If you plan to use Fixed port bond mode (default), connect the ports to the StorageGRID Grid and Client Networks, as shown in the table.

Port	Connects to…
Port 1	Client Network (optional)
Port 2	Grid Network
Port 3	Client Network (optional)
Port 4	Grid Network

   - If you plan to use the Aggregate port bond mode, connect one or more of the network ports to one or more switches. You should connect at least two of the four ports to avoid having a single point of failure. If you use more than one switch for a single LACP bond, the switches must support MLAG or equivalent.

3. If you plan to use the Admin Network for StorageGRID, connect the Admin Network port on the appliance to the Admin Network, using an Ethernet cable.

Copyright information

Copyright © 2024 NetApp, Inc. All Rights Reserved. Printed in the U.S. No part of this document covered by copyright may be reproduced in any form or by any means—graphic, electronic, or mechanical, including photocopying, recording, taping, or storage in an electronic retrieval system—without prior written permission of the copyright owner.

Software derived from copyrighted NetApp material is subject to the following license and disclaimer:

THIS SOFTWARE IS PROVIDED BY NETAPP “AS IS” AND WITHOUT ANY EXPRESS OR IMPLIED WARRANTIES, INCLUDING, BUT NOT LIMITED TO, THE IMPLIED WARRANTIES OF MERCHANTABILITY AND FITNESS FOR A PARTICULAR PURPOSE, WHICH ARE HEREBY DISCLAIMED. IN NO EVENT SHALL NETAPP BE LIABLE FOR ANY DIRECT, INDIRECT, INCIDENTAL, SPECIAL, EXEMPLARY, OR CONSEQUENTIAL DAMAGES (INCLUDING, BUT NOT LIMITED TO, PROCUREMENT OF SUBSTITUTE GOODS OR SERVICES; LOSS OF USE, DATA, OR PROFITS; OR BUSINESS INTERRUPTION) HOWEVER CAUSED AND ON ANY THEORY OF LIABILITY, WHETHER IN CONTRACT, STRICT LIABILITY, OR TORT (INCLUDING NEGLIGENCE OR OTHERWISE) ARISING IN ANY WAY OUT OF THE USE OF THIS SOFTWARE, EVEN IF ADVISED OF THE POSSIBILITY OF SUCH DAMAGE.

NetApp reserves the right to change any products described herein at any time, and without notice. NetApp assumes no responsibility or liability arising from the use of products described herein, except as expressly agreed to in writing by NetApp. The use or purchase of this product does not convey a license under any patent rights, trademark rights, or any other intellectual property rights of NetApp.

The product described in this manual may be protected by one or more U.S. patents, foreign patents, or pending applications.

LIMITED RIGHTS LEGEND: Use, duplication, or disclosure by the government is subject to restrictions as set forth in subparagraph (b)(3) of the Rights in Technical Data -Noncommercial Items at DFARS 252.227-7013 (FEB 2014) and FAR 52.227-19 (DEC 2007).

Data contained herein pertains to a commercial product and/or commercial service (as defined in FAR 2.101) and is proprietary to NetApp, Inc. All NetApp technical data and computer software provided under this Agreement is commercial in nature and developed solely at private expense. The U.S. Government has a non-exclusive, non-transferrable, nonsublicensable, worldwide, limited irrevocable license to use the Data only in connection with and in support of the U.S. Government contract under which the Data was delivered. Except as provided herein, the Data may not be used, disclosed, reproduced, modified, performed, or displayed without the prior written approval of NetApp, Inc. United States Government license rights for the Department of Defense are limited to those rights identified in DFARS clause 252.227-7015(b) (FEB 2014).

Trademark information

NETAPP, the NETAPP logo, and the marks listed at http://www.netapp.com/TM are trademarks of NetApp, Inc. Other company and product names may be trademarks of their respective owners.