Manage networks and connections

StorageGRID 11.7

NetApp
March 05, 2024

This PDF was generated from https://docs.netapp.com/us-en/storagegrid-117/admin/configuring-network-settings.html on March 05, 2024. Always check docs.netapp.com for the latest.

Table of Contents

Manage networks and connections . . . 1
Configure network settings: Overview . . . 1
Guidelines for StorageGRID networks . . . 1
View IP addresses . . . 2
Supported ciphers for outgoing TLS connections . . . 3
Configure VLAN interfaces . . . 4
Manage traffic classification policies . . . 7
Manage link costs . . . 14

Manage networks and connections

Configure network settings: Overview

You can configure various network settings from the Grid Manager to fine tune the operation of your StorageGRID system.

Configure VLAN interfaces

You can create virtual LAN (VLAN) interfaces to isolate and partition traffic for security, flexibility, and performance. Each VLAN interface is associated with one or more parent interfaces on Admin Nodes and Gateway Nodes. You can use VLAN interfaces in HA groups and in load balancer endpoints to segregate client or admin traffic by application or tenant.

Traffic classification policies

You can use traffic classification policies to identify and handle different types of network traffic, including traffic related to specific buckets, tenants, client subnets, or load balancer endpoints. These policies can assist with traffic limiting and monitoring.

Guidelines for StorageGRID networks

You can use the Grid Manager to configure and manage StorageGRID networks and connections.

See Configure S3 and Swift client connections to learn how to connect S3 or Swift clients.

Default StorageGRID networks

By default, StorageGRID supports three network interfaces per grid node, allowing you to configure the networking for each individual grid node to match your security and access requirements.

For more information about network topology, see Networking guidelines.

Grid Network

Required. The Grid Network is used for all internal StorageGRID traffic. It provides connectivity between all nodes in the grid, across all sites and subnets.

Admin Network

Optional. The Admin Network is typically used for system administration and maintenance. It can also be used for client protocol access. The Admin Network is typically a private network and does not need to be routable between sites.

Client Network

Optional. The Client Network is an open network typically used to provide access to S3 and Swift client applications, so the Grid Network can be isolated and secured. The Client Network can communicate with any subnet reachable through the local gateway.

Guidelines

- Each StorageGRID grid node requires a dedicated network interface, IP address, subnet mask, and gateway for each network it is assigned to.
- A grid node can't have more than one interface on a network.
- A single gateway, per network, per grid node is supported, and it must be on the same subnet as the node. You can implement more complex routing in the gateway, if required.
- On each node, each network maps to a specific network interface.

Network	Interface name
Grid	eth0
Admin (optional)	eth1
Client (optional)	eth2

- If the node is connected to a StorageGRID appliance, specific ports are used for each network. For details, see the installation instructions for your appliance.
- The default route is generated automatically, per node. If eth2 is enabled, then 0.0.0.0/0 uses the Client Network on eth2. If eth2 is not enabled, then 0.0.0.0/0 uses the Grid Network on eth0.
- The Client Network does not become operational until the grid node has joined the grid
- The Admin Network can be configured during grid node deployment to allow access to the installation user interface before the grid is fully installed.

Optional interfaces

Optionally, you can add extra interfaces to a node. For example, you might want to add a trunk interface to an Admin or Gateway Node, so you can use VLAN interfaces to segregate the traffic belonging to different applications or tenants. Or, you might want to add an access interface to use in a high availability (HA) group.

To add trunk or access interfaces, see the following:

- **VMware (after installing the node)**: VMware: Add trunk or access interfaces to a node
  - **RHEL or CentOS (before installing the node)**: Create node configuration files
  - **Ubuntu or Debian (before installing the node)**: Create node configuration files
  - **RHEL, CentOS, Ubuntu, or Debian (after installing the node)**: Linux: Add trunk or access interfaces to a node

View IP addresses

You can view the IP address for each grid node in your StorageGRID system. You can then use this IP address to log in to the grid node at the command line and perform various maintenance procedures.

Before you begin

You are signed in to the Grid Manager using a supported web browser.

About this task

For information about changing IP addresses, see Configure IP addresses.

Steps

1. Select **NODES** > ***grid node*** > **Overview**.
2. Select **Show more** to the right of the IP Addresses title.

   The IP addresses for that grid node are listed in a table.

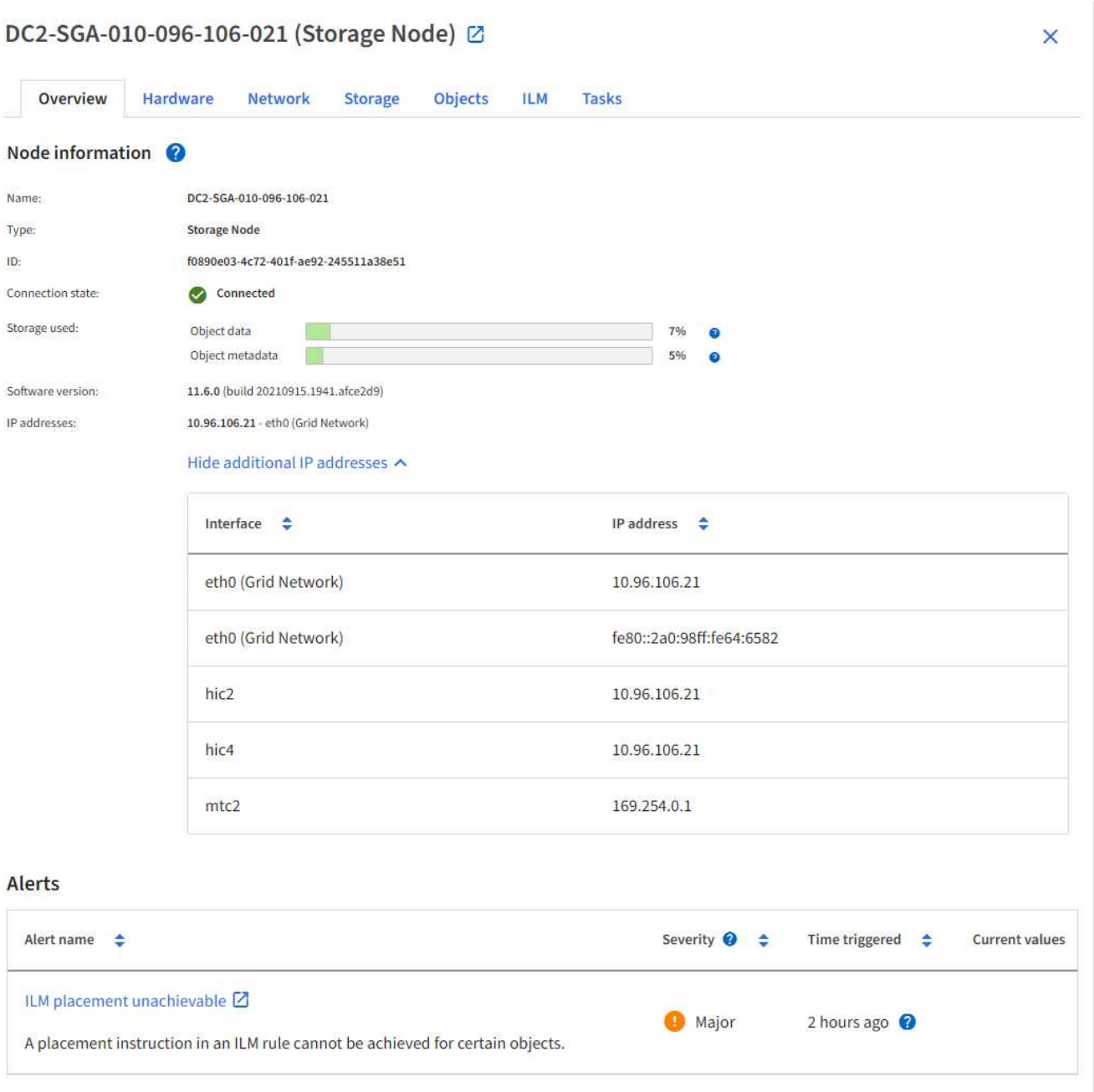

Supported ciphers for outgoing TLS connections

The StorageGRID system supports a limited set of cipher suites for Transport Layer Security (TLS) connections to the external systems used for identity federation and Cloud

Storage Pools.

Supported versions of TLS

StorageGRID supports TLS 1.2 and TLS 1.3 for connections to external systems used for identity federation and Cloud Storage Pools.

The TLS ciphers that are supported for use with external systems have been selected to ensure compatibility with a range of external systems. The list is larger than the list of ciphers that are supported for use with S3 or Swift client applications. To configure ciphers, go to **CONFIGURATION** > **Security** > **Security settings** and select **TLS and SSH policies**.

> TLS configuration options such as protocol versions, ciphers, key exchange algorithms, and MAC algorithms aren't configurable in StorageGRID. Contact your NetApp account representative if you have specific requests about these settings.

Configure VLAN interfaces

You can create virtual LAN (VLAN) interfaces on Admin Nodes and Gateway Nodes and use them in HA groups and load balancer endpoints to isolate and partition traffic for security, flexibility, and performance.

Considerations for VLAN interfaces

- You create a VLAN interface by entering a VLAN ID and choosing a parent interface on one or more nodes.
- A parent interface must be configured as a trunk interface at the switch.
- A parent interface can be the Grid Network (eth0), the Client Network (eth2), or an additional trunk interface for the VM or bare-metal host (for example, ens256).
- For each VLAN interface, you can select only one parent interface for a given node. For example, you can't use both the Grid Network interface and the Client Network interface on the same Gateway Node as the parent interface for the same VLAN.
- If the VLAN interface is for Admin Node traffic, which includes traffic related to the Grid Manager and the Tenant Manager, select interfaces on Admin Nodes only.
- If the VLAN interface is for S3 or Swift client traffic, select interfaces on either Admin Nodes or Gateway Nodes.
- If you need to add trunk interfaces, see the following for details:
  - **VMware (after installing the node)**: VMware: Add trunk or access interfaces to a node
  - **RHEL or CentOS (before installing the node)**: Create node configuration files
  - **Ubuntu or Debian (before installing the node)**: Create node configuration files
  - **RHEL, CentOS, Ubuntu, or Debian (after installing the node)**: Linux: Add trunk or access interfaces to a node

Create a VLAN interface

Before you begin

- You are signed in to the Grid Manager using a supported web browser.

- You have the Root access permission.
- A trunk interface has been configured in the network and attached to the VM or Linux node. You know the name of the trunk interface.
- You know the ID of the VLAN you are configuring.

About this task

Your network administrator might have configured one or more trunk interfaces and one or more VLANs to segregate the client or admin traffic belonging to different applications or tenants. Each VLAN is identified by a numeric ID or tag. For example, your network might use VLAN 100 for FabricPool traffic and VLAN 200 for an archive application.

You can use the Grid Manager to create VLAN interfaces that allow clients to access StorageGRID on a specific VLAN. When you create VLAN interfaces, you specify the VLAN ID and select parent (trunk) interfaces on one or more nodes.

Access the wizard

Steps

1. Select **CONFIGURATION** > **Network** > **VLAN interfaces**.
2. Select **Create**.

Enter details for the VLAN interfaces

Steps

1. Specify the ID of the VLAN in your network. You can enter any value between 1 and 4094.

   VLAN IDs don’t need to be unique. For example, you might use VLAN ID 200 for admin traffic at one site and the same VLAN ID for client traffic at another site. You can create separate VLAN interfaces with different sets of parent interfaces at each site. However, two VLAN interfaces with the same ID can’t share the same interface on a node. If you specify an ID that has already been used, a message appears.

2. Optionally, enter a short description for the VLAN interface.
3. Select **Continue**.

Choose parent interfaces

The table lists the available interfaces for all Admin Nodes and Gateway Nodes at each site in your grid. Admin Network (eth1) interfaces can’t be used as parent interfaces and aren’t shown.

Steps

1. Select one or more parent interfaces to attach this VLAN to.

   For example, you might want to attach a VLAN to the Client Network (eth2) interface for a Gateway Node and an Admin Node.

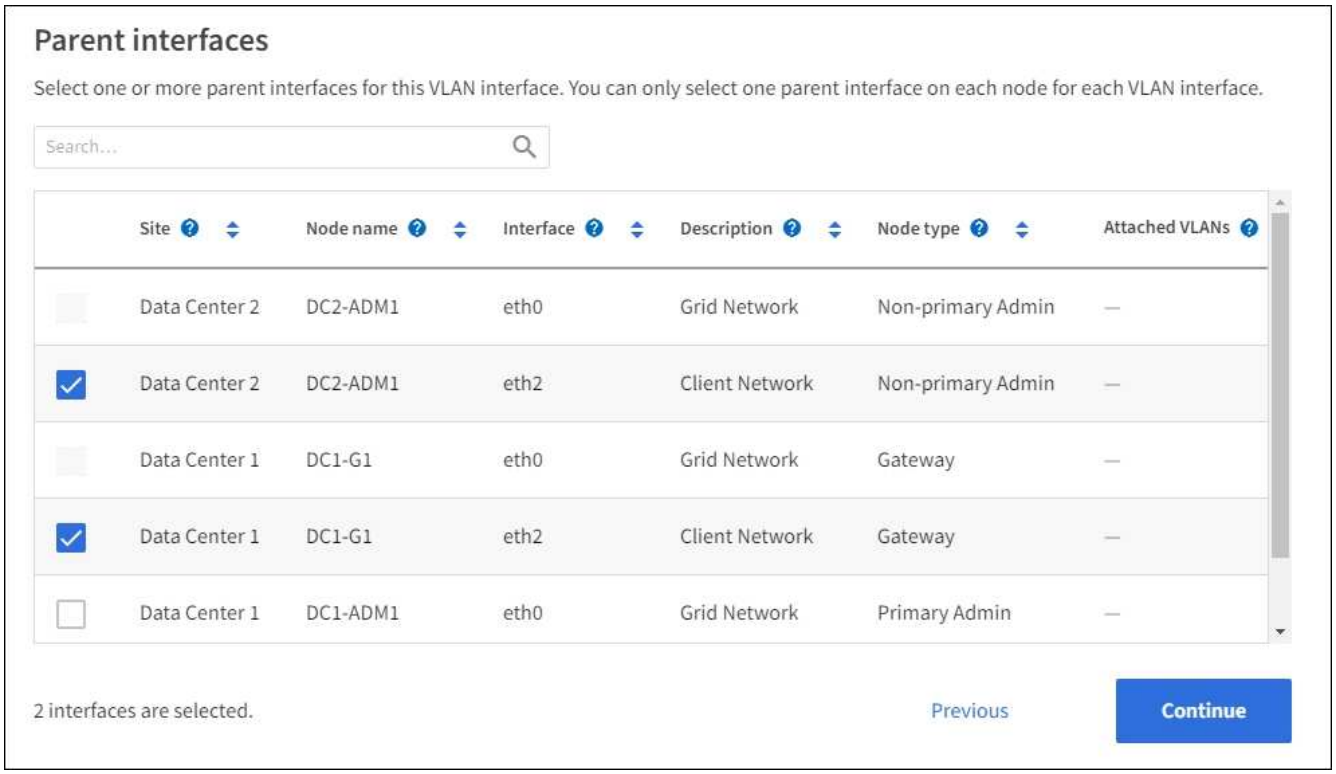

2. Select **Continue**.

Confirm the settings

Steps

1. Review the configuration and make any changes.
   - If you need to change the VLAN ID or description, select **Enter VLAN details** at the top of the page.
   - If you need to change a parent interface, select **Choose parent interfaces** at the top of the page or select **Previous**.
   - If you need to remove a parent interface, select the trash can .
2. Select **Save**.
3. Wait up to 5 minutes for the new interface to appear as a selection on the High availability groups page and to be listed in the **Network interfaces** table for the node (**NODES** > ***parent interface node*** > **Network**).

Edit a VLAN interface

When you edit a VLAN interface, you can make the following types of changes:

- Change the VLAN ID or description.
- Add or remove parent interfaces.

For example, you might want to remove a parent interface from a VLAN interface if you plan to decommission the associated node.

Note the following:

- You can’t change a VLAN ID if the VLAN interface is used in an HA group.

- You can’t remove a parent interface if that parent interface is used in an HA group.

  For example, suppose VLAN 200 is attached to parent interfaces on Nodes A and B. If an HA group uses the VLAN 200 interface for Node A and the eth2 interface for Node B, you can remove the unused parent interface for Node B, but you can’t remove the used parent interface for Node A.

Steps

1. Select **CONFIGURATION** > **Network** > **VLAN interfaces**.
2. Select the checkbox for the VLAN interface you want to edit. Then, select **Actions** > **Edit**.
3. Optionally, update the VLAN ID or the description. Then, select **Continue**.

   You can’t update a VLAN ID if the VLAN is used in an HA group.

4. Optionally, select or clear the checkboxes to add parent interfaces or to remove unused interfaces. Then, select **Continue**.
5. Review the configuration and make any changes.
6. Select **Save**.

Remove a VLAN interface

You can remove one or more VLAN interfaces.

You can’t remove a VLAN interface if it is currently used in an HA group. You must remove the VLAN interface from the HA group before you can remove it.

To avoid any disruptions in client traffic, consider doing one of the following:

- Add a new VLAN interface to the HA group before removing this VLAN interface.
- Create a new HA group that does not use this VLAN interface.
- If the VLAN interface you want to remove is currently the active interface, edit the HA group. Move the VLAN interface you want to remove to the bottom of the priority list. Wait until communication is established on the new primary interface and then remove the old interface from the HA group. Finally, delete the VLAN interface on that node.

Steps

1. Select **CONFIGURATION** > **Network** > **VLAN interfaces**.
2. Select the checkbox for each VLAN interface you want to remove. Then, select **Actions** > **Delete**.
3. Select **Yes** to confirm your selection.

   All VLAN interfaces you selected are removed. A green success banner appears on the VLAN interfaces page.

Manage traffic classification policies

Manage traffic classification policies: Overview

To enhance your quality-of-service (QoS) offerings, you can create traffic classification policies to identify and monitor different types of network traffic. These policies can assist

with traffic limiting and monitoring.

Traffic classification policies are applied to endpoints on the StorageGRID Load Balancer service for Gateway Nodes and Admin Nodes. To create traffic classification policies, you must have already created load balancer endpoints.

Matching rules

Each traffic classification policy contains one or more matching rules to identify the network traffic related to one or more of the following entities:

- Buckets
- Subnet
- Tenant
- Load balancer endpoints

StorageGRID monitors traffic that matches any rule within the policy according to the objectives of the rule. Any traffic that matches any rule for a policy is handled by that policy. Conversely, you can set rules to match all traffic except a specified entity.

Traffic limiting

Optionally, you can add the following limit types to a policy:

- Aggregate bandwidth
- Per-request bandwidth
- Concurrent requests
- Request rate

Limit values are enforced on a per load balancer basis. If traffic is distributed simultaneously across multiple load balancers, the total maximum rates are a multiple of the rate limits you specify.

> You can create policies to limit aggregate bandwidth or to limit per-request bandwidth. However, StorageGRID can’t limit both types of bandwidth at the same time. Aggregate bandwidth limits might impose an additional minor performance impact on non-limited traffic.

For aggregate or per-request bandwidth limits, the requests stream in or out at the rate you set. StorageGRID can only enforce one speed, so the most specific policy match, by matcher type, is the one enforced. The bandwidth consumed by the the request does not count against other less specific matching policies containing aggregate bandwidth limit policies. For all other limit types, client requests are delayed by 250 milliseconds and receive a 503 Slow Down response for requests that exceed any matching policy limit.

In the Grid Manager, you can view traffic charts and verify that the polices are enforcing the traffic limits you expect.

Use traffic classification policies with SLAs

You can use traffic classification policies in conjunction with capacity limits and data protection to enforce service-level agreements (SLAs) that provide specifics for capacity, data protection, and performance.

The following example shows three tiers of an SLA. You can create traffic classification policies to achieve the performance objectives of each SLA tier.

Service Level Tier	Capacity	Data Protection	Maximum performance allowed	Cost
Gold	1 PB storage allowed	3 copy ILM rule	25 K requests/sec 5 GB/sec (40 Gbps) bandwidth	$$$ per month
Silver	250 TB storage allowed	2 copy ILM rule	10 K requests/sec 1.25 GB/sec (10 Gbps) bandwidth	$$ per month
Bronze	100 TB storage allowed	2 copy ILM rule	5 K requests/sec 1 GB/sec (8 Gbps) bandwidth	$ per month

Create traffic classification policies

You can create traffic classification policies if you want to monitor, and optionally limit network traffic by bucket, bucket regex, CIDR, load balancer endpoint, or tenant. Optionally, you can set limits for a policy based on bandwidth, the number of concurrent requests, or the request rate.

Before you begin

- You are signed in to the Grid Manager using a supported web browser.
- You have the Root access permission.
- You have created any load balancer endpoints you want to match.
- You have created any tenants you want to match.

Steps

1. Select **CONFIGURATION** > **Network** > **Traffic classification**.
2. Select **Create**.
3. Enter a name and a description (optional) for the policy and select **Continue**.

   For example, describe what this traffic classification policy applies to and what it will limit.

4. Select **Add rule** and specify the following details to create one or more matching rules for the policy. Any policy that you create should have at least one matching rule. Select **Continue**.

Field	Description
Type	Select the types of traffic that the matching rule applies to. Traffic types are bucket, bucket regex, CIDR, load balancer endpoint, and tenant.

Field	Description
Match value	Enter the value that matches the selected Type. • Bucket: Enter one or more bucket names. • Bucket regex: Enter one or more regular expressions used to match a set of bucket names. The regular expression is unanchored. Use the ^ anchor to match at the beginning of the bucket name, and use the $ anchor to match at the end of the name. Regular expression matching supports a subset of PCRE (Perl compatible regular expression) syntax. • CIDR: Enter one or more IPv4 subnets, in CIDR notation, that matches the desired subnet. • Load balancer endpoint: Select an endpoint name. These are the load balancer endpoints you defined on the Configure load balancer endpoints. • Tenant: Tenant matching uses the access key ID. If the request does not contain an access key ID (for example, anonymous access), then the ownership of the bucket accessed is used to determine the tenant.
Inverse match	If you want to match all network traffic *except* traffic consistent with the Type and Match Value just defined, select the **Inverse match** checkbox. Otherwise, leave the checkbox cleared. For example, if you want this policy to apply to all but one of the load balancer endpoints, specify the load balancer endpoint to be excluded, and select **Inverse match**. For a policy containing multiple matchers where at least one is an inverse matcher, be careful not to create a policy that matches all requests.

5. Optionally, select **Add a limit** and select the following details to add one or more limits to control the network traffic matched by a rule.

> StorageGRID collects metrics even if you don't add any limits, so you can understand traffic trends.

Field	Description
Type	The type of limit you want to apply to the network traffic matched by the rule. For example, you can limit bandwidth or request rate. **Note**: You can create policies to limit aggregate bandwidth or to limit per-request bandwidth. However, StorageGRID can't limit both types of bandwidth at the same time. When aggregate bandwidth is in use, per-request bandwidth is unavailable. Conversely, when per-request bandwidth is in use, aggregate bandwidth is unavailable. Aggregate bandwidth limits might impose an additional minor performance impact on non-limited traffic. For bandwidth limits, StorageGRID applies the policy that best matches the type of limit set. For example, if you have a policy that limits traffic in only one direction, then traffic in the opposite direction will be unlimited, even if there is traffic that matches additional policies that have bandwidth limits. StorageGRID implements "best" matches for bandwidth limits in the following order: • Exact IP address (/32 mask) • Exact bucket name • Bucket regex • Tenant • Endpoint • Non-exact CIDR matches (not /32) • Inverse matches
Applies to	Whether this limit applies to client read requests (GET or HEAD) or write requests (PUT, POST, or DELETE).
Value	The value that network traffic will be limited to, based on the Unit you select. For example, enter 10 and select MiB/s to prevent the network traffic matched by this rule from exceeding 10 MiB/s. **Note**: Depending on the units setting, the available units will be either binary (for example, GiB) or decimal (for example, GB). To change the units setting, select the user drop-down in the upper right of the Grid Manager, then select **User Preferences**.
Unit	The unit that describes the value you entered.

For example, if you want to create a 40 GB/s bandwidth limit for an SLA tier, create two Aggregate bandwidth limits: GET/HEAD at 40 GB/s and PUT/POST/DELETE at 40 GB/s.

6. Select **Continue**.
7. Read and review the Traffic classification policy. Use the **Previous** button to go back and make changes as required. When you are satisfied with the policy, select **Save and continue**.

   S3 and Swift client traffic is now handled according to the traffic classification policy.

After you finish

View network traffic metrics to verify that the polices are enforcing the traffic limits you expect.

Edit traffic classification policy

You can edit a traffic classification policy to change its name or description, or to create, edit, or delete any rules or limits for the policy.

Before you begin

- You are signed in to the Grid Manager using a supported web browser.
- You have the Root access permission.

Steps

1. Select **CONFIGURATION** > **Network** > **Traffic classification**.

   The Traffic classification policies page appears and the existing policies are listed in a table.

2. Edit the policy using the Actions menu or the details page. See create traffic classification policies for what to enter.

   Actions menu

   a. Select the checkbox for the policy.

   b. Select **Actions** > **Edit**.

   Details page

   a. Select the policy name.

   b. Select the **Edit** button beside the policy name.

3. For the Enter policy name step, optionally edit the policy name or description, and select **Continue**.
4. For the Add matching rules step, optionally add a rule or edit the **Type** and **Match value** of the existing rule, and select **Continue**.
5. For the Set limits step, optionally add, edit, or delete a limit, and select **Continue**.
6. Review the updated policy, and select **Save and continue**.

   The changes you made to the policy are saved, and network traffic is now handled according to the traffic classification policies. You can view traffic charts and verify that the polices are enforcing the traffic limits you expect.

Delete a traffic classification policy

You can delete a traffic classification policy if you no longer need it. Make sure you delete the right policy because a policy can’t be retrieved when deleted.

Before you begin

- You are signed in to the Grid Manager using a supported web browser.
- You have the Root access permission.

Steps

1. Select **CONFIGURATION** > **Network** > **Traffic classification**.

   The Traffic classification policies page appears with the existing policies listed in a table.

2. Delete the policy using the Actions menu or the details page.

   Actions menu

   a. Select the checkbox for the policy.

   b. Select **Actions** > **Remove**.

   Policy details page

   a. Select the policy name.

   b. Select the **Remove** button beside the policy name.

3. Select **Yes** to confirm that you want to delete the policy.

   The policy is deleted.

View network traffic metrics

You can monitor network traffic by viewing the graphs that are available from the Traffic classification policies page.

Before you begin

- You are signed in to the Grid Manager using a supported web browser.
- You have the Root access permission or the Tenant accounts permission.

About this task

For any existing traffic classification policy, you can view metrics for the load balancer service to determine if the policy is successfully limiting traffic across the network. The data in the graphs can help you determine if you need to adjust the policy.

Even if no limits are set for a traffic classification policy, metrics are collected and the graphs provide useful information for understanding traffic trends.

Steps

1. Select **CONFIGURATION** > **Network** > **Traffic classification**.

   The Traffic classification policies page appears, and the existing policies are listed in the table.

2. Select the traffic classification policy name for which you want to view metrics.
3. Select the **Metrics** tab.

   The traffic classification policy graphs appear. The graphs display metrics only for the traffic that matches the selected policy.

   The following graphs are included on the page.

- Request rate: This graph provides the amount of bandwidth matching this policy handled by all load balancers. Received data includes request headers for all requests and body data size for responses that have body data. Sent includes response headers for all requests and response body data size for requests that include body data in the response.

> When requests are complete, this chart only shows bandwidth usage. For slow or large object requests the actual instantaneous bandwidth might differ from the values reported in this graph.

- Error response rate: This graph provides an approximate rate at which requests matching this policy are returning errors (HTTP status code >= 400) to clients.
- Average request duration (non-error): This graph provides an average duration of successful requests matching this policy.
- Policy bandwidth usage: This graph provides the amount of bandwidth matching this policy handled by all load balancers. Received data includes request headers for all requests and body data size for responses that have body data. Sent includes response headers for all requests and response body data size for requests that include body data in the response.

4. Position the cursor over a line graph to see a pop-up of values on a specific part of the graph.
5. Select **Grafana dashboard** right below the Metrics title to view all the graphs for a policy. In addition to the four graphs from the **Metrics** tab, you can view two more graphs:
   - Write request rate by object size: The rate for PUT/POST/DELETE requests matching this policy. Positioning on an individual cell shows per second rates. Rates shown in the hover view are truncated to integer counts and might report 0 when there are non-zero requests in the bucket.
   - Read request rate by object size: The rate for GET/HEAD requests matching this policy. Positioning on an individual cell shows per second rates. Rates shown in the hover view are truncated to integer counts and might report 0 when there are non-zero requests in the bucket.
6. Alternatively, access the graphs from the **SUPPORT** menu.
   a. Select **SUPPORT** > **Tools** > **Metrics**.
   b. Select **Traffic Classification Policy** from the **Grafana** section.
   c. Select the policy from the menu on the upper left of the page.
   d. Position the cursor over a graph to see a pop-up that shows the date and time of the sample, object sizes that are aggregated into the count, and the number of requests per second during that time period.

      Traffic classification policies are identified by their ID. Policy IDs are listed on the Traffic classification policies page.
7. Analyze the graphs to determine how often the policy is limiting traffic and whether you need to adjust the policy.

Manage link costs

Link costs let you prioritize which data center site provides a requested service when two or more data center sites exist. You can adjust link costs to reflect latency between sites.

What are link costs?

- Link costs are used to prioritize which object copy is used to fulfill object retrievals.
- Link costs are used by the Grid Management API and the Tenant Management API to determine which internal StorageGRID services to use.
- Link costs are used by the Load Balancer service on Admin Nodes and Gateway Nodes to direct client connections. See Considerations for load balancing.

The diagram shows a three site grid that has link costs configured between sites:

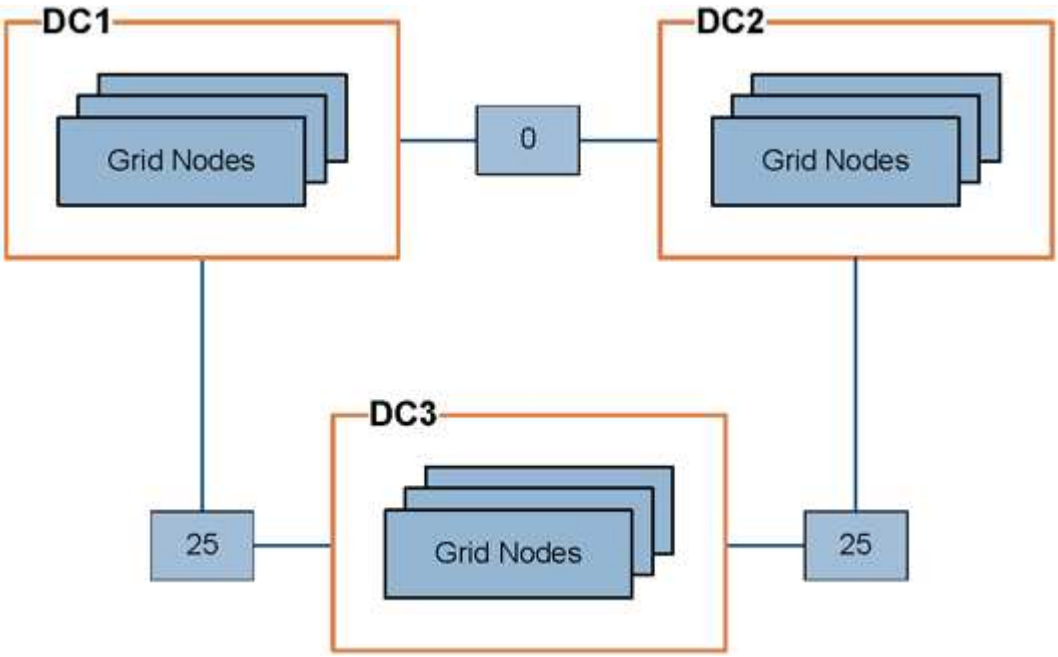

- The Load Balancer service on Admin Nodes and Gateway Nodes equally distributes client connections to all Storage Nodes at the same data center site and to any data center sites with a link cost of 0.

  In the example, a Gateway Node at data center site 1 (DC1) equally distributes client connections to Storage Nodes at DC1 and to Storage Nodes at DC2. A Gateway Node at DC3 sends client connections only to Storage Nodes at DC3.

- When retrieving an object that exists as multiple replicated copies, StorageGRID retrieves the copy at the data center that has the lowest link cost.

  In the example, if a client application at DC2 retrieves an object that is stored both at DC1 and DC3, the object is retrieved from DC1, because the link cost from DC1 to DC2 is 0, which is lower than the link cost from DC3 to DC2 (25).

Link costs are arbitrary relative numbers with no specific unit of measure. For example, a link cost of 50 is used less preferentially than a link cost of 25. The table shows commonly used link costs.

Link	Link cost	Notes
Between physical data center sites	25 (default)	Data centers connected by a WAN link.

Link	Link cost	Notes
Between logical data center sites at the same physical location	0	Logical data centers in the same physical building or campus connected by a LAN.

Update link costs

You can update the link costs between data center sites to reflect latency between sites.

Before you begin

- You are signed in to the Grid Manager using a supported web browser.
- You have the Grid topology page configuration permission.

Steps

1. Select **SUPPORT** > **Other** > **Link cost**.

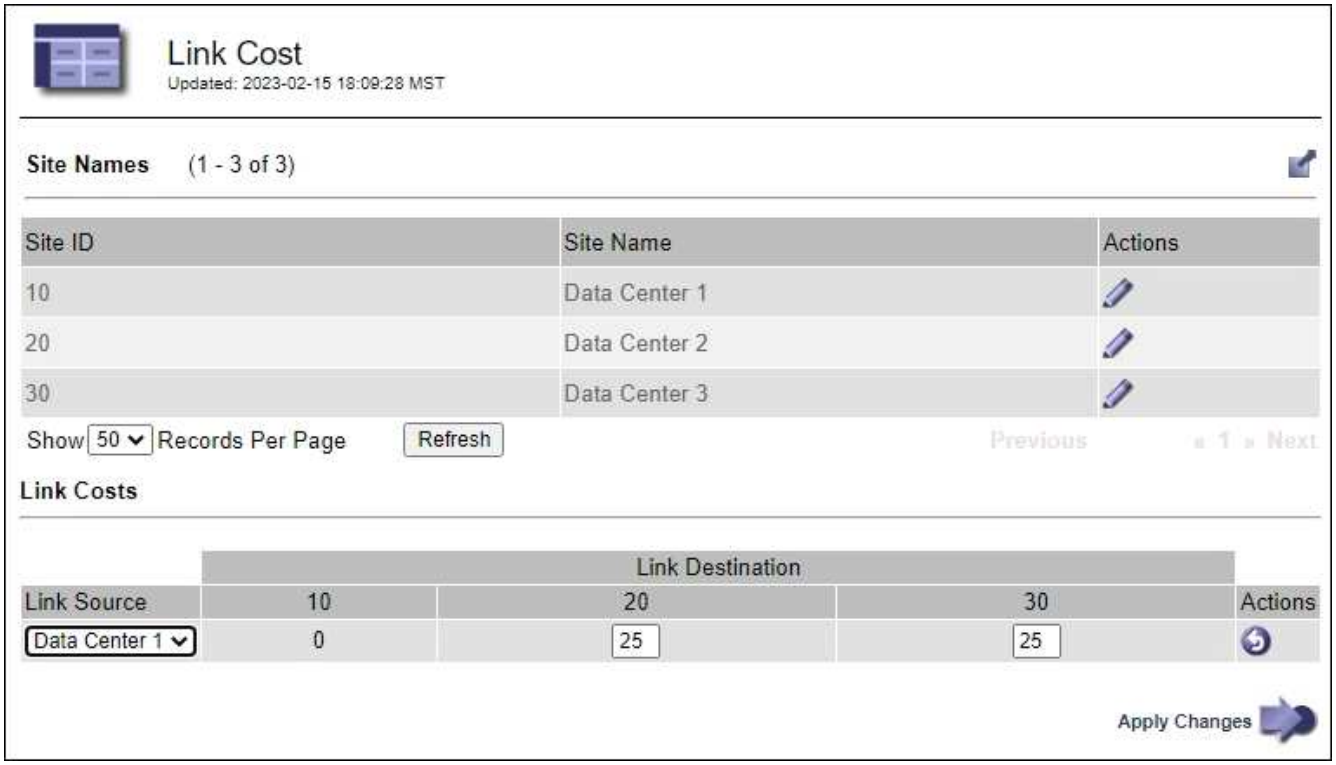

2. Select a site under **Link Source** and enter a cost value between 0 and 100 under **Link Destination**.

   You can't change the link cost if the source is the same as the destination.

   To cancel changes, select **Revert**.

3. Select **Apply Changes**.

Copyright information

Copyright © 2024 NetApp, Inc. All Rights Reserved. Printed in the U.S. No part of this document covered by copyright may be reproduced in any form or by any means—graphic, electronic, or mechanical, including photocopying, recording, taping, or storage in an electronic retrieval system—without prior written permission of the copyright owner.

Software derived from copyrighted NetApp material is subject to the following license and disclaimer:

THIS SOFTWARE IS PROVIDED BY NETAPP “AS IS” AND WITHOUT ANY EXPRESS OR IMPLIED WARRANTIES, INCLUDING, BUT NOT LIMITED TO, THE IMPLIED WARRANTIES OF MERCHANTABILITY AND FITNESS FOR A PARTICULAR PURPOSE, WHICH ARE HEREBY DISCLAIMED. IN NO EVENT SHALL NETAPP BE LIABLE FOR ANY DIRECT, INDIRECT, INCIDENTAL, SPECIAL, EXEMPLARY, OR CONSEQUENTIAL DAMAGES (INCLUDING, BUT NOT LIMITED TO, PROCUREMENT OF SUBSTITUTE GOODS OR SERVICES; LOSS OF USE, DATA, OR PROFITS; OR BUSINESS INTERRUPTION) HOWEVER CAUSED AND ON ANY THEORY OF LIABILITY, WHETHER IN CONTRACT, STRICT LIABILITY, OR TORT (INCLUDING NEGLIGENCE OR OTHERWISE) ARISING IN ANY WAY OUT OF THE USE OF THIS SOFTWARE, EVEN IF ADVISED OF THE POSSIBILITY OF SUCH DAMAGE.

NetApp reserves the right to change any products described herein at any time, and without notice. NetApp assumes no responsibility or liability arising from the use of products described herein, except as expressly agreed to in writing by NetApp. The use or purchase of this product does not convey a license under any patent rights, trademark rights, or any other intellectual property rights of NetApp.

The product described in this manual may be protected by one or more U.S. patents, foreign patents, or pending applications.

LIMITED RIGHTS LEGEND: Use, duplication, or disclosure by the government is subject to restrictions as set forth in subparagraph (b)(3) of the Rights in Technical Data -Noncommercial Items at DFARS 252.227-7013 (FEB 2014) and FAR 52.227-19 (DEC 2007).

Data contained herein pertains to a commercial product and/or commercial service (as defined in FAR 2.101) and is proprietary to NetApp, Inc. All NetApp technical data and computer software provided under this Agreement is commercial in nature and developed solely at private expense. The U.S. Government has a non-exclusive, non-transferrable, nonsublicensable, worldwide, limited irrevocable license to use the Data only in connection with and in support of the U.S. Government contract under which the Data was delivered. Except as provided herein, the Data may not be used, disclosed, reproduced, modified, performed, or displayed without the prior written approval of NetApp, Inc. United States Government license rights for the Department of Defense are limited to those rights identified in DFARS clause 252.227-7015(b) (FEB 2014).

Trademark information

NETAPP, the NETAPP logo, and the marks listed at http://www.netapp.com/TM are trademarks of NetApp, Inc. Other company and product names may be trademarks of their respective owners.