Replace controller in rack

StorageGRID 11.7

NetApp
March 05, 2024

This PDF was generated from https://docs.netapp.com/us-en/storagegrid-117/sg6000/removing-sg6000-cn-controller-from-cabinet-or-rack.html on March 05, 2024. Always check docs.netapp.com for the latest.

Table of Contents

Replace controller in rack 1
Remove SG6000-CN controller from cabinet or rack 1
Reinstall SG6000-CN controller into cabinet or rack 2

Replace controller in rack

Remove SG6000-CN controller from cabinet or rack

Remove the SG6000-CN controller from a cabinet or rack to access the top cover or to move the controller to a different location.

Before you begin

- You have labels to identify each cable that is connected to the SG6000-CN controller.
- You have physically located the SG6000-CN controller where you are performing maintenance in the data center.

  Locate controller in data center

- You have shut down the SG6000-CN controller.

  Shut down SG6000-CN controller

  Don’t shut down the controller using the power switch.

Steps

1. Label and then disconnect the controller power cables.
2. Wrap the strap end of the ESD wristband around your wrist, and secure the clip end to a metal ground to prevent static discharge.
3. Label and then disconnect the controller data cables and any SFP+ or SFP28 transceivers.

   To prevent degraded performance, don’t twist, fold, pinch, or step on the cables.

4. Loosen the two captive screws on the controller front panel.

5. Slide the SG6000-CN controller forward out of the rack until the mounting rails are fully extended and you hear the latches on both sides click.

   The controller top cover is accessible.

6. Optional: If you are fully removing the controller from the cabinet or rack, follow the instructions for the rail kit to remove the controller from the rails.

After replacing the part, return the failed part to NetApp, as described in the RMA instructions shipped with the kit. See the Part Return & Replacements page for further information.

Related information

Remove SG6000-CN controller cover

Reinstall SG6000-CN controller into cabinet or rack

Reinstall the controller into a cabinet or rack when hardware maintenance is complete.

Before you begin

You have reinstalled the controller cover.

Reinstall SG6000-CN controller cover

Steps

1. Press the blue rail releases both rack rails at the same time and slide the SG6000-CN controller into the rack until it is fully seated.

   When you can't move the controller any further, pull the blue latches on both sides of the chassis to slide the controller all the way in.

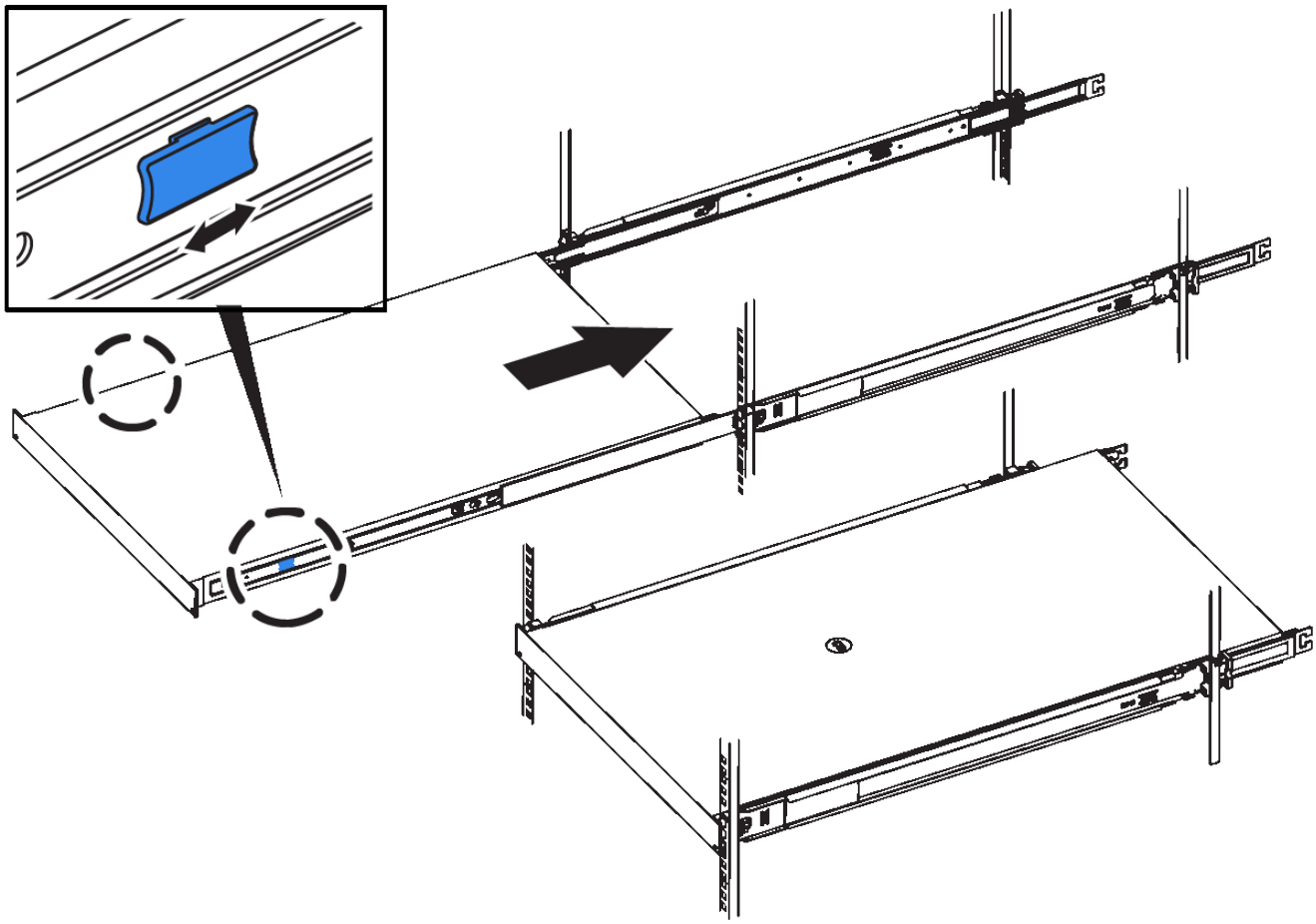

   Don't attach the front bezel until after you power on the controller.

2. Tighten the captive screws on the controller front panel to secure the controller in the rack.

3. Wrap the strap end of the ESD wristband around your wrist, and secure the clip end to a metal ground to prevent static discharge.
4. Reconnect the controller data cables and any SFP+ or SFP28 transceivers.

   To prevent degraded performance, don’t twist, fold, pinch, or step on the cables.

   Cable appliance (SG6000)

5. Reconnect the controller power cables.

   Connect power cords and apply power (SG6000)

After you finish

The controller can be restarted.

Power on SG6000-CN controller and verify operation

Copyright information

Copyright © 2024 NetApp, Inc. All Rights Reserved. Printed in the U.S. No part of this document covered by copyright may be reproduced in any form or by any means—graphic, electronic, or mechanical, including photocopying, recording, taping, or storage in an electronic retrieval system—without prior written permission of the copyright owner.

Software derived from copyrighted NetApp material is subject to the following license and disclaimer:

THIS SOFTWARE IS PROVIDED BY NETAPP “AS IS” AND WITHOUT ANY EXPRESS OR IMPLIED WARRANTIES, INCLUDING, BUT NOT LIMITED TO, THE IMPLIED WARRANTIES OF MERCHANTABILITY AND FITNESS FOR A PARTICULAR PURPOSE, WHICH ARE HEREBY DISCLAIMED. IN NO EVENT SHALL NETAPP BE LIABLE FOR ANY DIRECT, INDIRECT, INCIDENTAL, SPECIAL, EXEMPLARY, OR CONSEQUENTIAL DAMAGES (INCLUDING, BUT NOT LIMITED TO, PROCUREMENT OF SUBSTITUTE GOODS OR SERVICES; LOSS OF USE, DATA, OR PROFITS; OR BUSINESS INTERRUPTION) HOWEVER CAUSED AND ON ANY THEORY OF LIABILITY, WHETHER IN CONTRACT, STRICT LIABILITY, OR TORT (INCLUDING NEGLIGENCE OR OTHERWISE) ARISING IN ANY WAY OUT OF THE USE OF THIS SOFTWARE, EVEN IF ADVISED OF THE POSSIBILITY OF SUCH DAMAGE.

NetApp reserves the right to change any products described herein at any time, and without notice. NetApp assumes no responsibility or liability arising from the use of products described herein, except as expressly agreed to in writing by NetApp. The use or purchase of this product does not convey a license under any patent rights, trademark rights, or any other intellectual property rights of NetApp.

The product described in this manual may be protected by one or more U.S. patents, foreign patents, or pending applications.

LIMITED RIGHTS LEGEND: Use, duplication, or disclosure by the government is subject to restrictions as set forth in subparagraph (b)(3) of the Rights in Technical Data -Noncommercial Items at DFARS 252.227-7013 (FEB 2014) and FAR 52.227-19 (DEC 2007).

Data contained herein pertains to a commercial product and/or commercial service (as defined in FAR 2.101) and is proprietary to NetApp, Inc. All NetApp technical data and computer software provided under this Agreement is commercial in nature and developed solely at private expense. The U.S. Government has a non-exclusive, non-transferrable, nonsublicensable, worldwide, limited irrevocable license to use the Data only in connection with and in support of the U.S. Government contract under which the Data was delivered. Except as provided herein, the Data may not be used, disclosed, reproduced, modified, performed, or displayed without the prior written approval of NetApp, Inc. United States Government license rights for the Department of Defense are limited to those rights identified in DFARS clause 252.227-7015(b) (FEB 2014).

Trademark information

NETAPP, the NETAPP logo, and the marks listed at http://www.netapp.com/TM are trademarks of NetApp, Inc. Other company and product names may be trademarks of their respective owners.