SG6000

StorageGRID 11.7

NetApp
March 05, 2024

This PDF was generated from https://docs.netapp.com/us-en/storagegrid-117/installconfig/installing-hardware-sg6000.html on March 05, 2024. Always check docs.netapp.com for the latest.

Table of Contents

SG6000 1
Install into cabinet or rack (SG6000) 1
Install 60-drive shelves (SG6060) 1
Install drives (SG6060) 3
Install 24-drive shelves (SGF6024) 4
Install SG6000-CN controller (SG6060 and SG6024) 6

SG6000

Install into cabinet or rack (SG6000)

For the SG6060 and SGF6024, you install rails in your cabinet or rack and slide the controller shelf, any expansion shelves, and the compute controller onto the rails. For the SG6060, don't install the drives in each shelf until the shelves are installed.

Model	Install	For information
SG6060	60-drive controller shelf and any 60-drive expansion shelves	Install 60-drive shelves
SG6060	60 drives into each shelf	Install drives
SGF6024	24-drive controller shelf	Install 24-drive shelves
SG6060 and SGF6024	SG6000-CN compute controller	Install SG6000-CN controller

Install 60-drive shelves (SG6060)

You install a set of rails for the E2860 controller shelf in your cabinet or rack, and then slide the controller shelf onto the rails. If you are installing 60-drive expansion shelves, the same procedure applies.

Before you begin

- You have reviewed the Safety Notices document included in the box, and understand the precautions for moving and installing hardware.
- You have the instructions packaged with the rail kit.

Each 60-drive shelf weighs approximately 132 lb (60 kg) without drives installed. Four people or a mechanized lift are required to safely move the shelf.

To avoid damaging the hardware, never move the shelf if drives are installed. You must remove all drives before moving the shelf.

When installing the E2860 controller shelf or optional expansion shelves, install hardware from the bottom to the top of the rack or cabinet to prevent the equipment from tipping over. To ensure that the heaviest equipment is at the bottom of the cabinet or rack, install the SG6000-CN controller above the E2860 controller shelf and expansion shelves.

Before committing to the installation, verify that the 0.5m optic cables shipped with the appliance, or cables that you supply, are long enough for the planned layout.

Steps

1. Carefully follow the instructions for the rail kit to install the rails in your cabinet or rack.

   For square hole cabinets, first install the provided cage nuts to secure the front and rear of the shelf with screws.

2. Remove the outer packing box for the appliance. Then, fold down the flaps on the inner box.
3. If you are lifting the appliance by hand, attach the four handles to the sides of the chassis.

   Push up on each handle until it clicks into place.

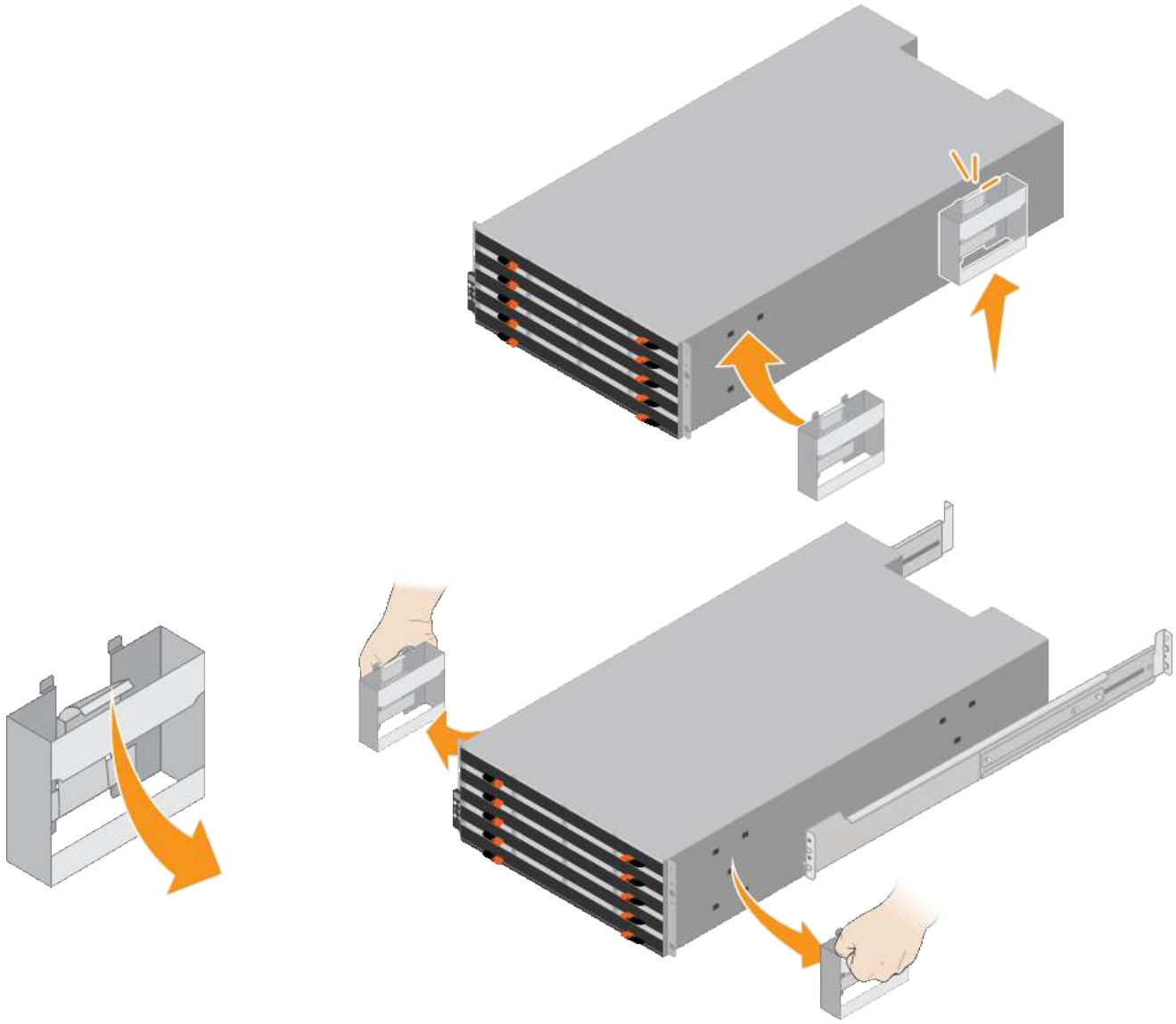

4. Place the back of the shelf (the end with the connectors) on the rails.
5. Supporting the shelf from the bottom, slide it into the cabinet. If you are using the handles, use the thumb latches to detach one handle at a time as you slide the shelf in.

   To remove the handles, pull back on the release latch, push down, then pull away from the shelf.

6. Secure the shelf to the front of the cabinet.

   Insert screws into the first and third holes from the top of the shelf on both sides.

7. Secure the shelf to the rear of the cabinet.

   Place two back brackets on each side of the upper rear section of the shelf. Insert screws into the first and third holes of each bracket.

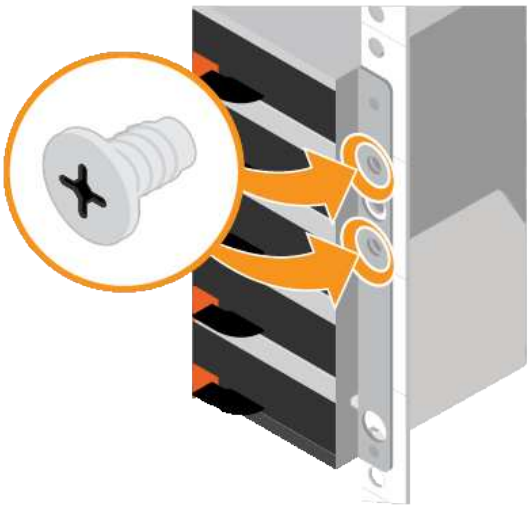

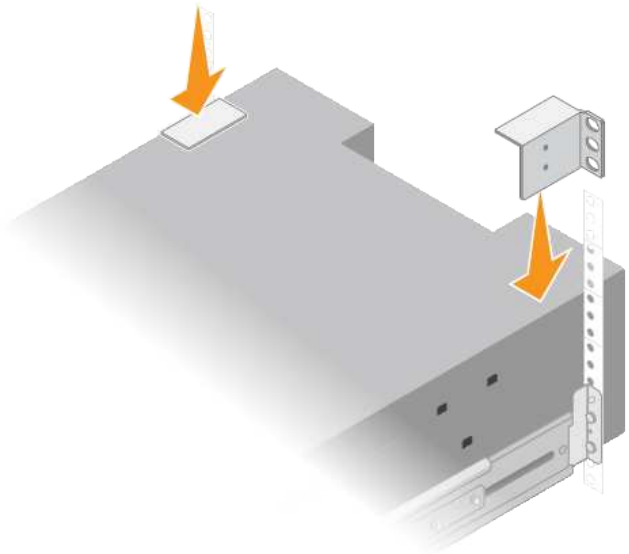

8. Repeat these steps for any expansion shelves.

Install drives (SG6060)

After installing the 60-drive shelf into a cabinet or rack, install all 60 drives into the shelf. The shipment for the E2860 controller shelf includes two SSD drives, which you should install in the top drawer of the controller shelf. Each optional expansion shelf includes 60 HDD drives and no SSD drives.

Before you begin

You have installed the E2860 controller shelf or optional expansion shelves (one or two) in the cabinet or rack.

> To avoid damaging the hardware, never move the shelf if drives are installed. You must remove all drives before moving the shelf.

Steps

1. Wrap the strap end of the ESD wristband around your wrist, and secure the clip end to a metal ground to prevent static discharge.
2. Remove the drives from their packaging.
3. Release the levers on the top drive drawer, and slide the drawer out using the levers.
4. Locate the two SSD drives.

   > Expansion shelves don’t use SSD drives.

5. Raise each drive handle to a vertical position.
6. Install the two SSD drives in slots 0 and 1 (the first two slots along the lefthand side of the drawer).

7. Gently position each drive into its slot, and lower the raised drive handle until it clicks into place.

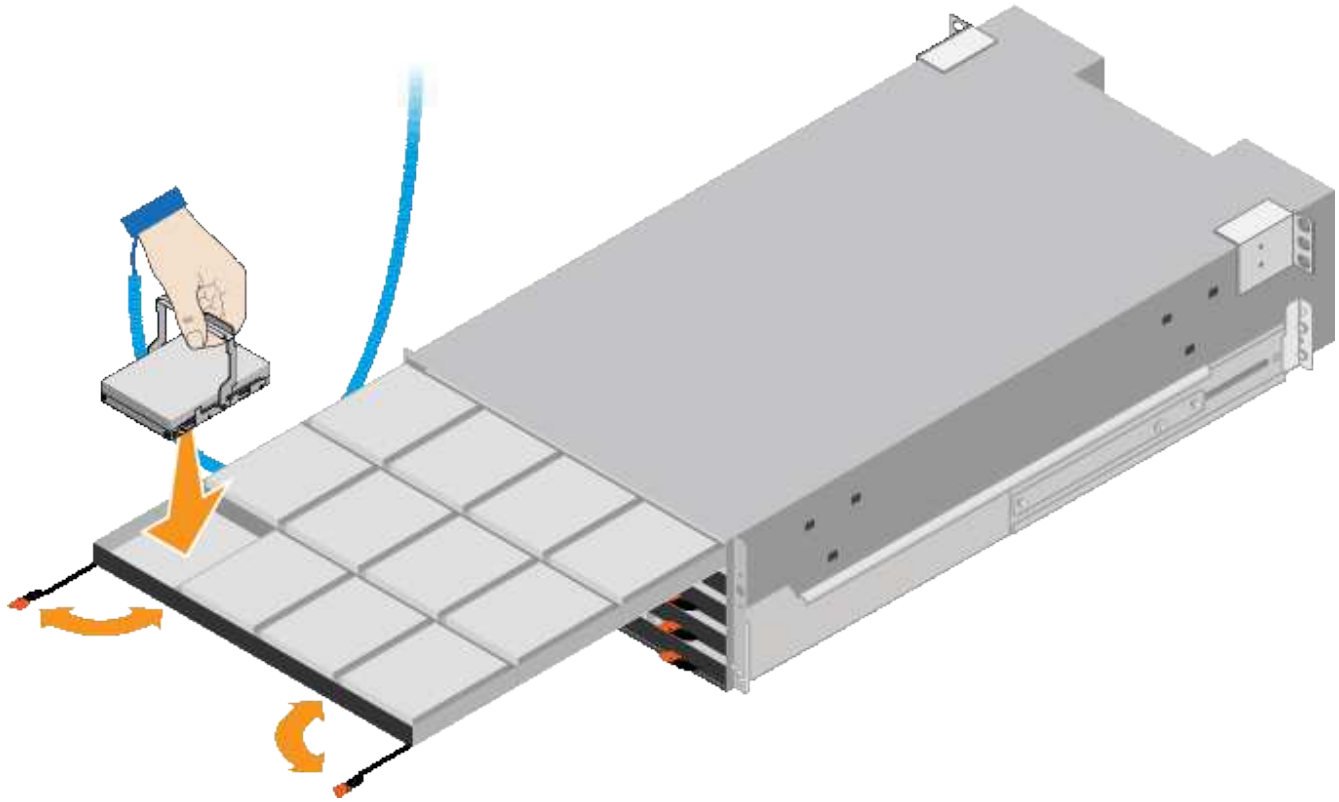

8. Install 10 HDD drives into the top drawer.
9. Slide the drawer back in by pushing on the center and closing both levers gently.

> Stop pushing the drawer if you feel binding. Use the release levers at the front of the drawer to slide the drawer back out. Then, carefully reinsert the drawer into the slot.

10. Repeat these steps to install HDD drives into the other four drawers.

> You must install all 60 drives to ensure correct operation.

11. Attach the front bezel to the shelf.
12. If you have expansion shelves, repeat these steps to install 12 HDD drives into each drawer of each expansion shelf.
13. Proceed to the instructions for installing the SG6000-CN into a cabinet or rack.

Install 24-drive shelves (SGF6024)

You install a set of rails for the EF570 controller shelf in your cabinet or rack, and then slide the array onto the rails.

Before you begin

- You have reviewed the Safety Notices document included in the box, and understand the precautions for moving and installing hardware.
- You have the instructions packaged with the rail kit.

Steps

1. Carefully follow the instructions for the rail kit to install the rails in your cabinet or rack.

   For square hole cabinets, first install the provided cage nuts to secure the front and rear of the shelf with screws.

2. Remove the outer packing box for the appliance. Then, fold down the flaps on the inner box.
3. Place the back of the shelf (the end with the connectors) on the rails.

   A fully loaded shelf weighs approximately 52 lb (24 kg). Two people are required to safely move the enclosure.

4. Carefully slide the enclosure all the way onto the rails.

   You might need to adjust the rails to ensure that the enclosure slides all the way onto the rails.

   Don’t place additional equipment on the rails after you finish installing the enclosure. The rails aren’t designed to bear additional weight.

   If applicable, you might need to remove the shelf end caps or the system bezel to secure the enclosure to the rack post; if so, you need to replace the end caps or bezel when you are done.

5. Secure the enclosure to the front of the cabinet or rack and rails by inserting two M5 screws through the mounting brackets (preinstalled on either side of the front of the enclosure), the holes on the rack or system cabinet, and the holes on the front of rails.

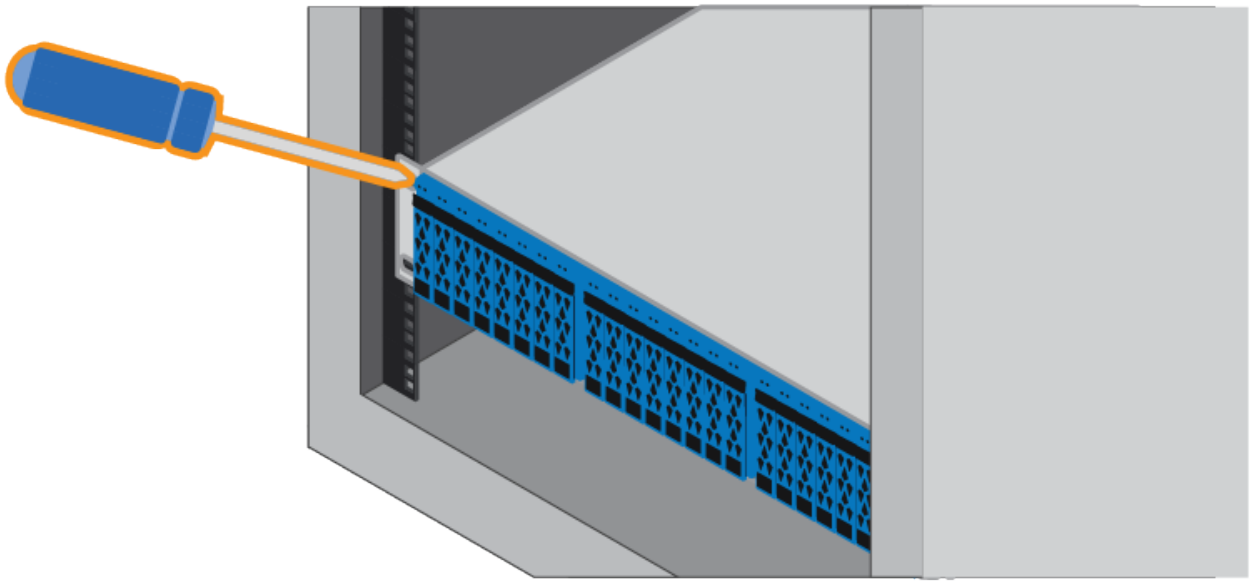

6. Secure the enclosure to the back of the rails by inserting two M5 screws through the brackets at the enclosure and the rail kit bracket.
7. If applicable, replace the shelf end caps or the system bezel.

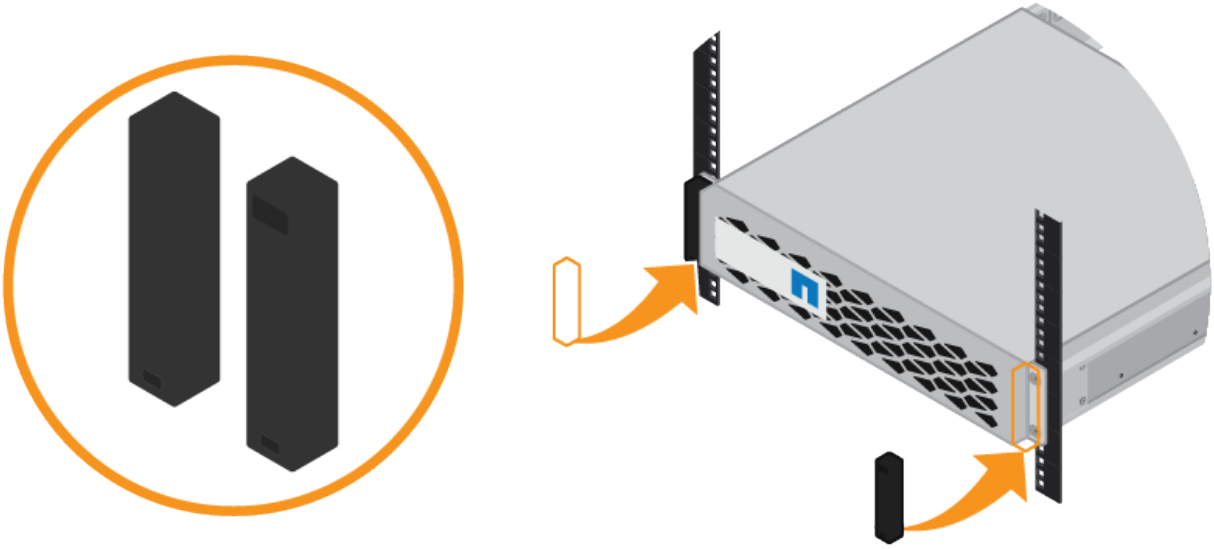

Install SG6000-CN controller (SG6060 and SG6024)

You install a set of rails for the SG6000-CN controller in your cabinet or rack, and then slide the controller onto the rails.

Before you begin

- You have reviewed the Safety Notices document included in the box, and understand the precautions for moving and installing hardware.
- You have the instructions packaged with the rail kit.
- You have installed the E2860 controller shelf and drives or the EF570 controller shelf.

Steps

1. Carefully follow the instructions for the rail kit to install the rails in your cabinet or rack.
2. On the two rails installed in the cabinet or rack, extend the movable parts of the rails until you hear a click.

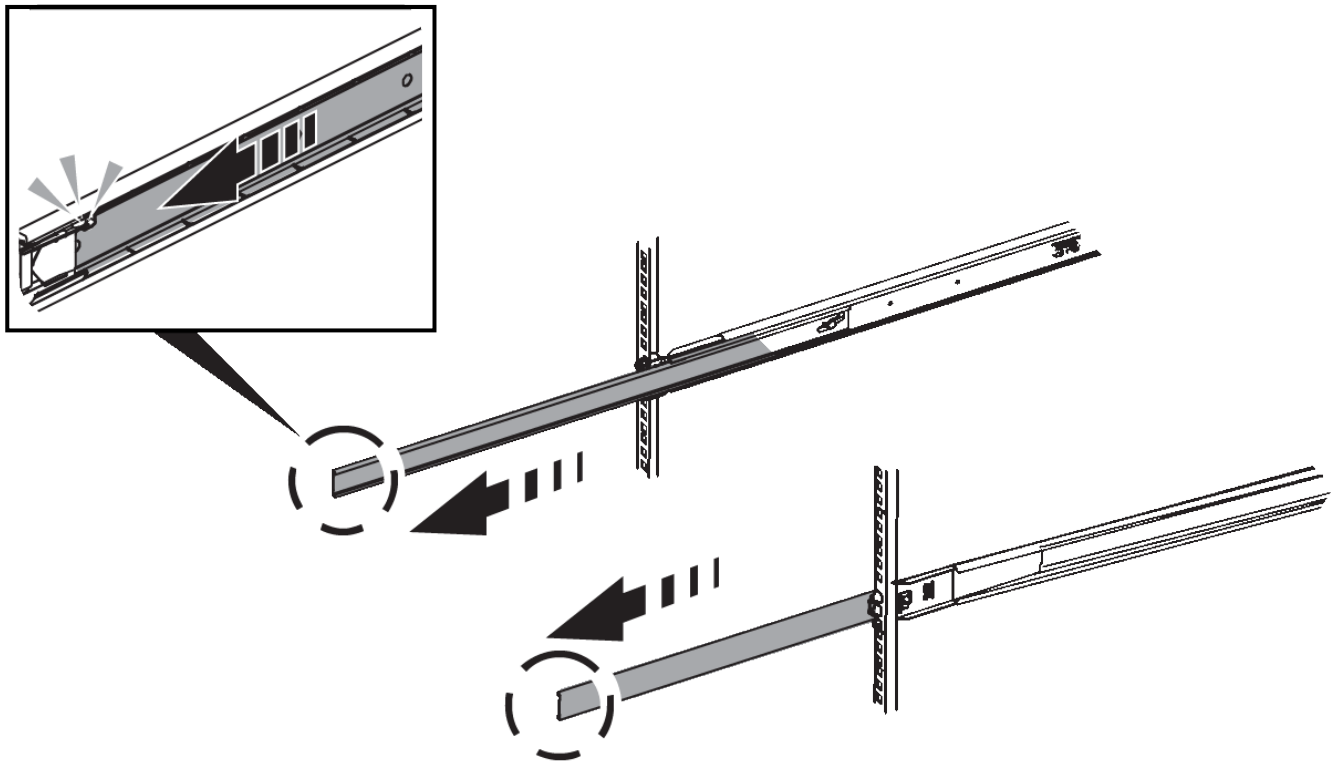

3. Insert the SG6000-CN controller into the rails.
4. Slide the controller into the cabinet or rack.

   When you can’t move the controller any further, pull the blue latches on both sides of the chassis to slide the controller all the way in.

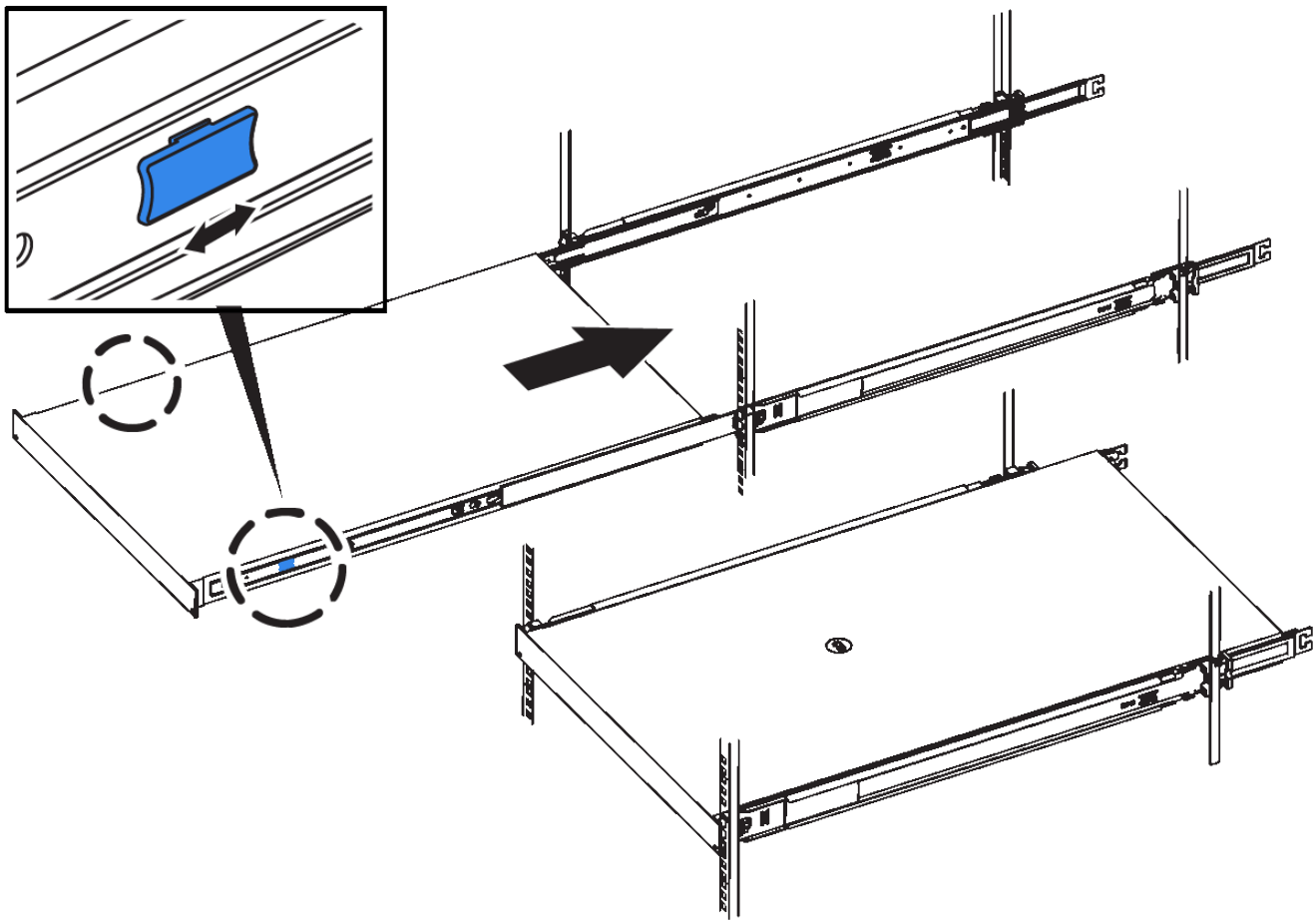

Don’t attach the front bezel until after you power on the controller.

5. Tighten the captive screws on the controller front panel to secure the controller in the rack.

Copyright information

Copyright © 2024 NetApp, Inc. All Rights Reserved. Printed in the U.S. No part of this document covered by copyright may be reproduced in any form or by any means—graphic, electronic, or mechanical, including photocopying, recording, taping, or storage in an electronic retrieval system—without prior written permission of the copyright owner.

Software derived from copyrighted NetApp material is subject to the following license and disclaimer:

THIS SOFTWARE IS PROVIDED BY NETAPP “AS IS” AND WITHOUT ANY EXPRESS OR IMPLIED WARRANTIES, INCLUDING, BUT NOT LIMITED TO, THE IMPLIED WARRANTIES OF MERCHANTABILITY AND FITNESS FOR A PARTICULAR PURPOSE, WHICH ARE HEREBY DISCLAIMED. IN NO EVENT SHALL NETAPP BE LIABLE FOR ANY DIRECT, INDIRECT, INCIDENTAL, SPECIAL, EXEMPLARY, OR CONSEQUENTIAL DAMAGES (INCLUDING, BUT NOT LIMITED TO, PROCUREMENT OF SUBSTITUTE GOODS OR SERVICES; LOSS OF USE, DATA, OR PROFITS; OR BUSINESS INTERRUPTION) HOWEVER CAUSED AND ON ANY THEORY OF LIABILITY, WHETHER IN CONTRACT, STRICT LIABILITY, OR TORT (INCLUDING NEGLIGENCE OR OTHERWISE) ARISING IN ANY WAY OUT OF THE USE OF THIS SOFTWARE, EVEN IF ADVISED OF THE POSSIBILITY OF SUCH DAMAGE.

NetApp reserves the right to change any products described herein at any time, and without notice. NetApp assumes no responsibility or liability arising from the use of products described herein, except as expressly agreed to in writing by NetApp. The use or purchase of this product does not convey a license under any patent rights, trademark rights, or any other intellectual property rights of NetApp.

The product described in this manual may be protected by one or more U.S. patents, foreign patents, or pending applications.

LIMITED RIGHTS LEGEND: Use, duplication, or disclosure by the government is subject to restrictions as set forth in subparagraph (b)(3) of the Rights in Technical Data -Noncommercial Items at DFARS 252.227-7013 (FEB 2014) and FAR 52.227-19 (DEC 2007).

Data contained herein pertains to a commercial product and/or commercial service (as defined in FAR 2.101) and is proprietary to NetApp, Inc. All NetApp technical data and computer software provided under this Agreement is commercial in nature and developed solely at private expense. The U.S. Government has a non-exclusive, non-transferrable, nonsublicensable, worldwide, limited irrevocable license to use the Data only in connection with and in support of the U.S. Government contract under which the Data was delivered. Except as provided herein, the Data may not be used, disclosed, reproduced, modified, performed, or displayed without the prior written approval of NetApp, Inc. United States Government license rights for the Department of Defense are limited to those rights identified in DFARS clause 252.227-7015(b) (FEB 2014).

Trademark information

NETAPP, the NETAPP logo, and the marks listed at http://www.netapp.com/TM are trademarks of NetApp, Inc. Other company and product names may be trademarks of their respective owners.