Hardware maintenance procedures

StorageGRID Appliances

NetApp
March 14, 2024

This PDF was generated from https://docs.netapp.com/us-en/storagegrid-appliances/sg6100/verify-component-to-replace.html on March 14, 2024. Always check docs.netapp.com for the latest.

Table of Contents

Hardware maintenance procedures . . . 1
- Verify component to replace in the SGF6112 . . . 1
- Replace one or both power supplies in the SGF6112 . . . 2
- Replace fan in an SGF6112 . . . 5
- Replace drives in the SGF6112 . . . 10
- Replace NIC in the SGF6112 . . . 12
- Replace SGF6112 CMOS battery . . . 20
- Replace SGF6112 cover . . . 25
- Replace SGF6112 appliance . . . 27
- Relocate SGF6112 in cabinet or rack . . . 30

Hardware maintenance procedures

Verify component to replace in the SGF6112

If you are unsure which hardware component to replace in your appliance, complete this procedure to identify the component and the location of the appliance in the data center.

Before you begin

- You have the serial number of the storage appliance where the component needs to be replaced.
- You are signed in to the Grid Manager using a supported web browser.

About this task

Use this procedure to identify the appliance with failed hardware and which of the replaceable hardware components is not operating properly. Components that might be identified for replacement include:

- Power supplies
- Fans
- Solid state drives (SSDs)
- Network Interface Cards (NICs)
- CMOS battery

Steps

1. Identify the failed component and the name of the appliance that it is installed in.
   a. In Grid Manager, Select **ALERTS** > **Current**.

      The Alerts page appears.

   b. Select the alert to see the alert details.

      Select the alert, not the heading for a group of alerts.

   c. Record the node name and unique identifying label of the component that has failed.

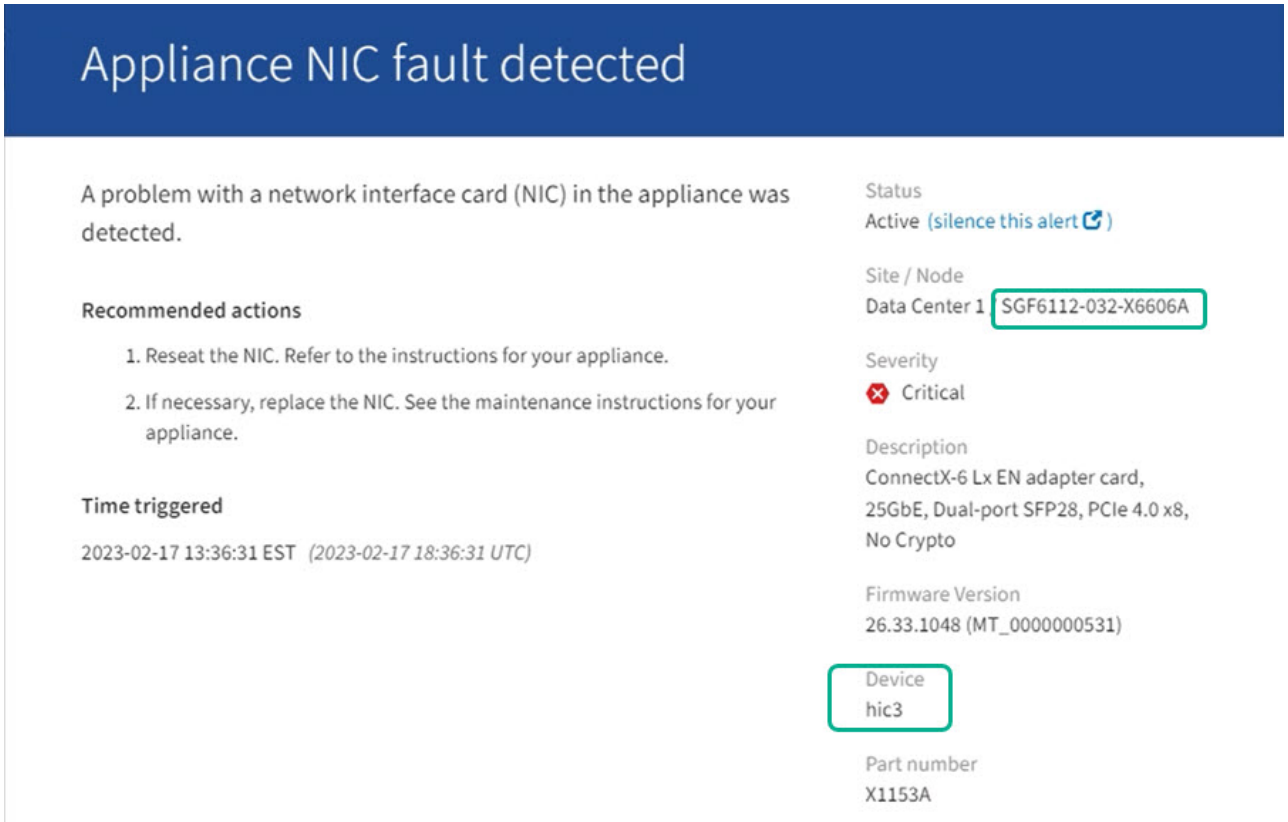

2. Identify the chassis with the component that needs to be replaced.
   a. From the Grid Manager, select **NODES**.
   b. From the table on the Nodes page, select the appliance Storage Node name with the failed component.
   c. Select the **Hardware** tab.

      Check the **Compute controller serial number** in the StorageGRID Appliance section. Check if the serial number matches the serial number of the storage appliance where you are replacing the component. If the serial number matches, you have found the correct appliance.

      - If the StorageGRID Appliance section in Grid Manager does not display, the node selected is not a StorageGRID appliance. Select a different node from the tree view.
      - If the serial numbers don't match, select a different node from the tree view.
3. After you locate the node where the component needs to be replaced, write down the appliance BMC IP address listed the StorageGRID Appliance section.

   To help you locate the appliance in the data center, you can use the BMC IP address to turn on the appliance identify LED.

Related information

Turn on the appliance identify LED

Replace one or both power supplies in the SGF6112

The SGF6112 appliance has two power supplies for redundancy. If one of the power supplies fails, you must replace it as soon as possible to ensure that the appliance has redundant power. Both power supplies operating in the appliance must be of the same

model and wattage.

Before you begin

- You have physically located the appliance with the power supply to be replaced.
- You have determined the location of the power supply to replace.
- If you are replacing only one power supply:
  - You have unpacked the replacement power supply unit and ensured that it is the same model and wattage as the power supply unit you are replacing.
  - You have confirmed that the other power supply is installed and running.
- If you are replacing both power supplies at the same time:
  - You have unpacked the replacement power supply units and ensured they are the same model and wattage.

About this task

The figure shows the two power supply units for the SGF6112. The power supplies are accessible from the back of the appliance.

Steps

1. If you are replacing only one power supply, you don't need to shut down the appliance. Go to the Unplug the power cord step. If you are replacing both power supplies at the same time, do the following before unplugging the power cords:

   a. Shut down the appliance.

   > If you have ever used an ILM rule that creates only one copy of an object and you are replacing both power supplies at the same time, you must replace the power supplies during a scheduled maintenance window. Otherwise, you might temporarily lose access to those objects during this procedure. See information about why you should not use single-copy replication.

2. Unplug the power cord from each power supply to be replaced.

   When viewed from the rear of the appliance, power supply A (PSU0) is on the right and power supply B (PSU1) is on the left.

3. Lift the handle on the first supply to be replaced.

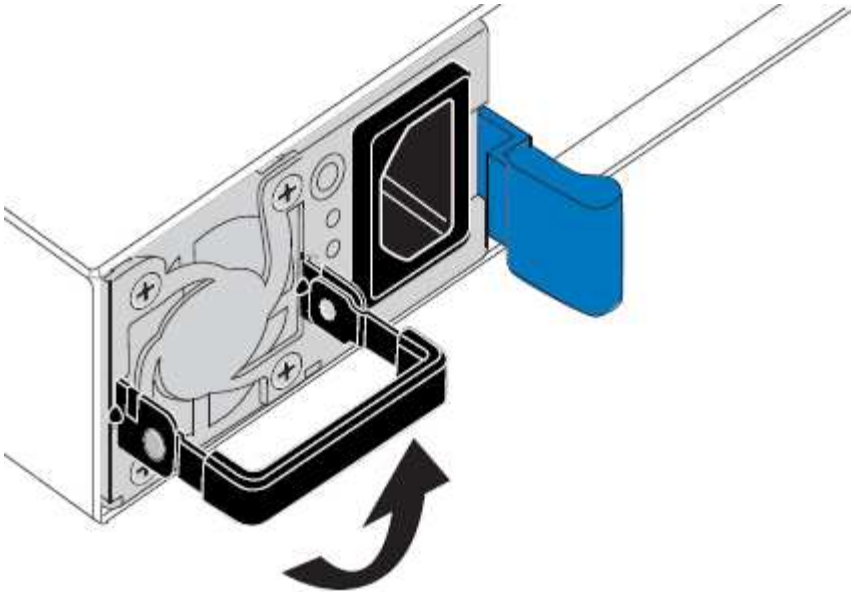

4. Press the blue latch and pull the power supply out.

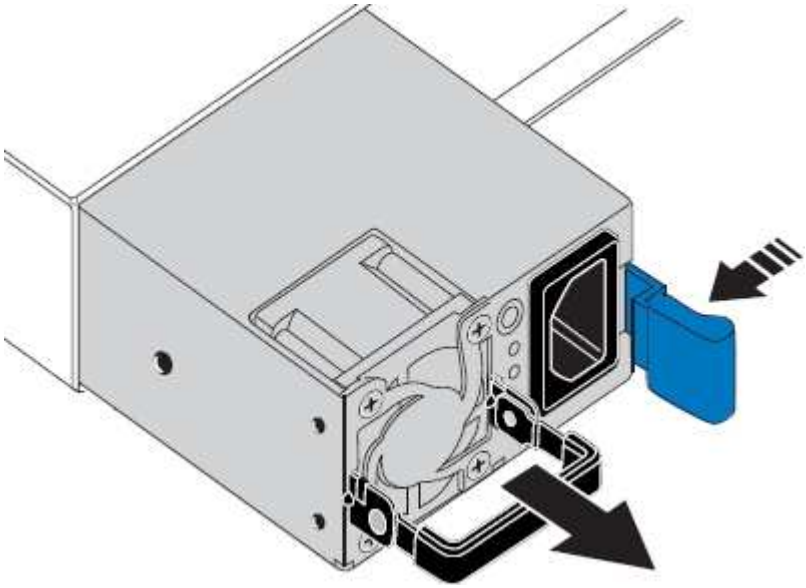

5. With the blue latch on the right, slide the replacement power supply into the chassis.

   Both installed power supplies must be the same model and wattage.

   Ensure that the blue latch is on the right side when you slide the replacement unit in.

   You will feel a click when the power supply is locked into place.

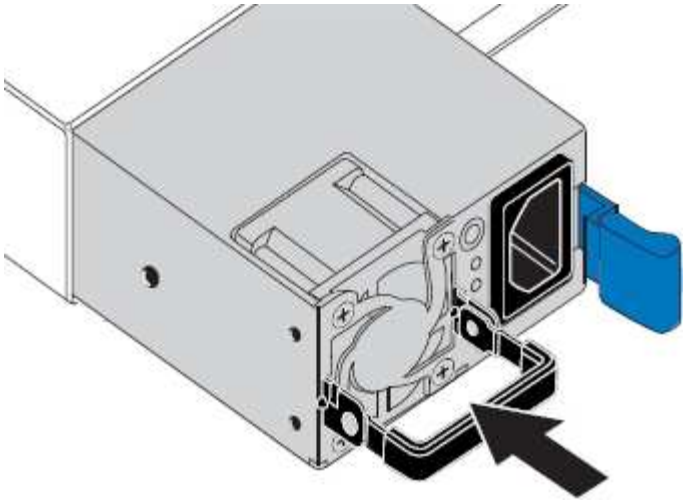

6. Push the handle back down against the body of the PSU.
7. If you are replacing both power supplies, repeat steps 2 though 6 to replace the second power supply.
8. Connect the power cords to the replaced units and apply power.

After replacing the part, return the failed part to NetApp, as described in the RMA instructions shipped with the kit. See the Part Return & Replacements page for further information.

Replace fan in an SGF6112

The SGF6112 appliance has eight cooling fans. If one of the fans fails, you must replace it as soon as possible to ensure that the appliance has proper cooling.

Before you begin

- You have the correct replacement fan.
- You have determined the location of the fan to replace.
- You have physically located the SGF6112 appliance where you are replacing the fan in the data center.

> A controlled shutdown of the appliance is required before removing the appliance from the rack.

- You have disconnected all cables and removed the appliance cover.
- You have confirmed that the other fans are installed and running.

About this task

To prevent service interruptions, confirm that all other Storage Nodes are connected to the grid before starting the fan replacement or replace the fan during a scheduled maintenance window when periods of service disruption are acceptable. See the information about monitoring node connection states.

> If you have ever used an ILM rule that creates only one copy of an object, you must replace the fan during a scheduled maintenance window. Otherwise, you might temporarily lose access to those objects during this procedure. See information about why you should not use single-copy replication.

The appliance node will not be accessible while you replace the fan.

The photograph shows a fan for the appliance. The electrical connector is highlighted. The cooling fans are accessible after you take the top cover off of the appliance.

> Each of the two power supply units also contain a fan. The power supply fans aren't included in this procedure.

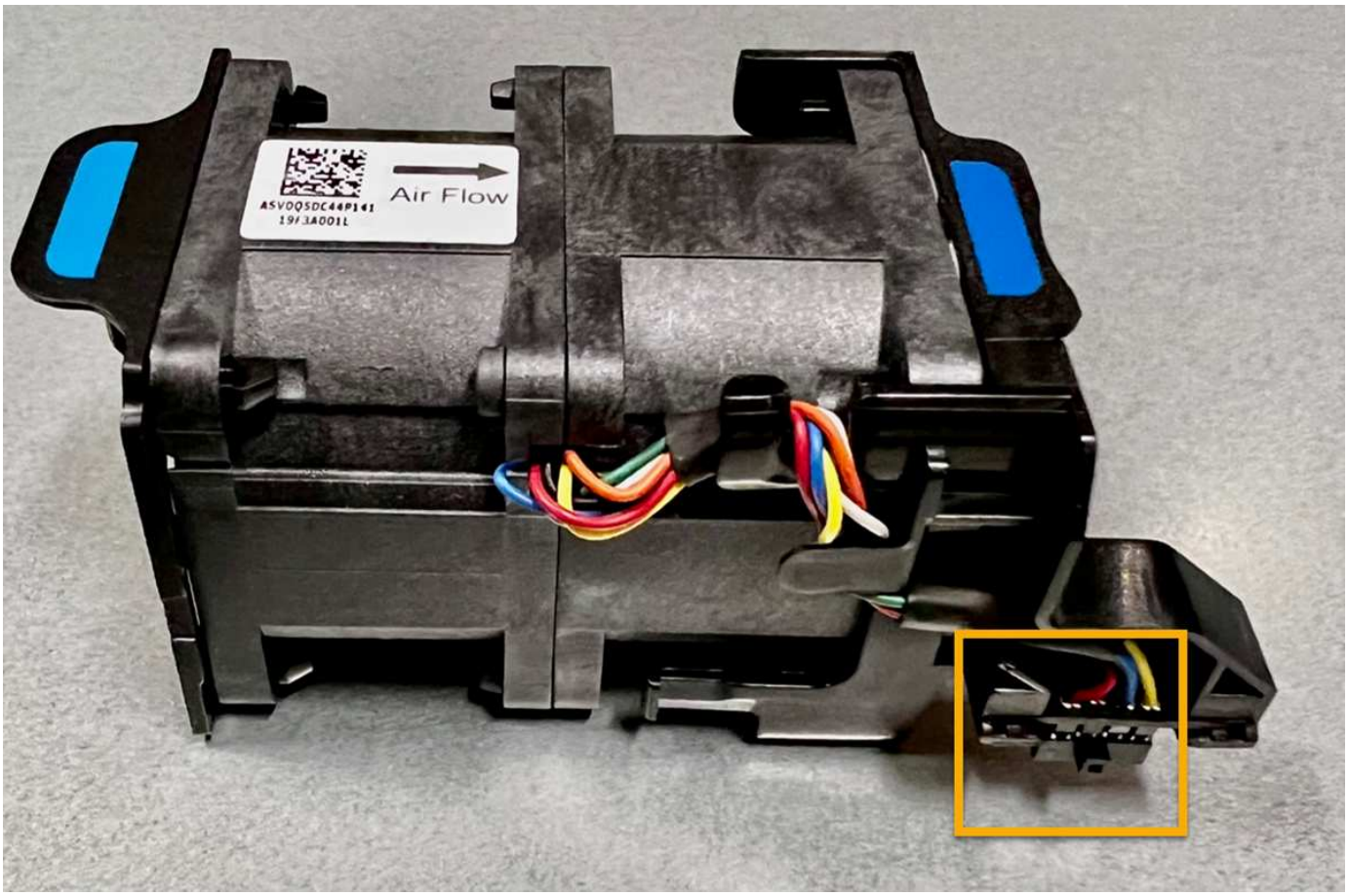

Steps

1. Wrap the strap end of the ESD wristband around your wrist, and secure the clip end to a metal ground to prevent static discharge.
2. Locate the fan that you need to replace.

   The eight fans are in the following positions in the chassis (front half of SGF6112 with top cover removed shown):

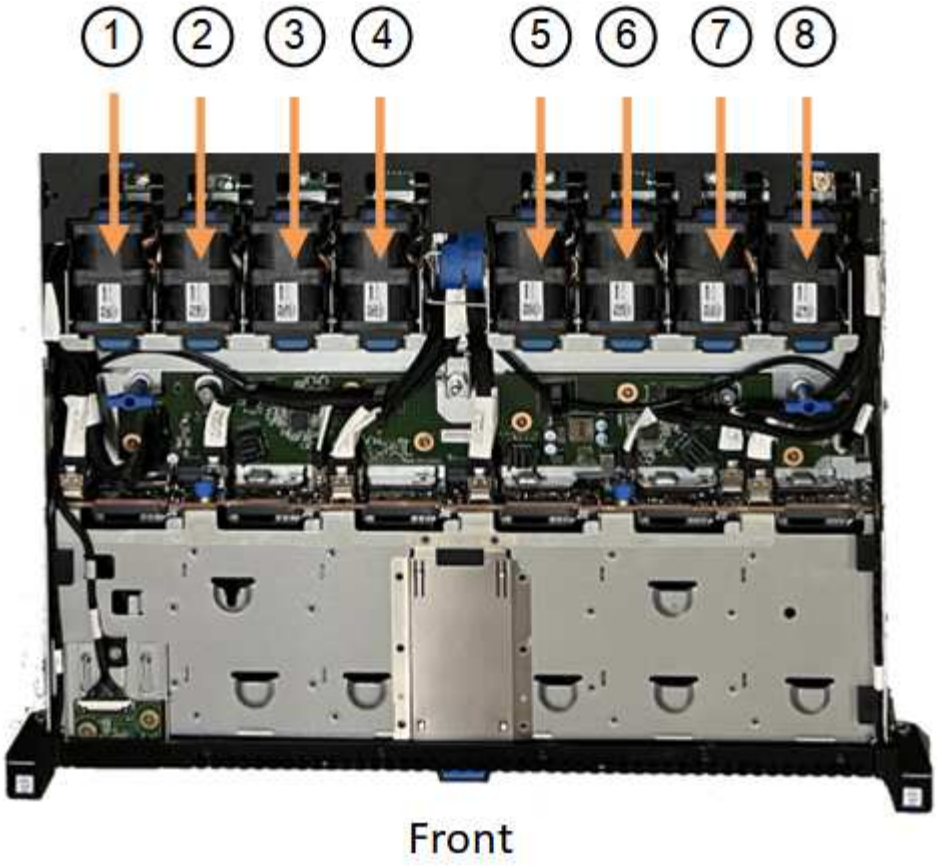

	Fan unit
1	Fan_SYS0
2	Fan_SYS1
3	Fan_SYS2
4	Fan_SYS3
5	Fan_SYS4
6	Fan_SYS5
7	Fan_SYS6
8	Fan_SYS7

3. Using the blue tabs on the fan, lift the failed fan out of the chassis.

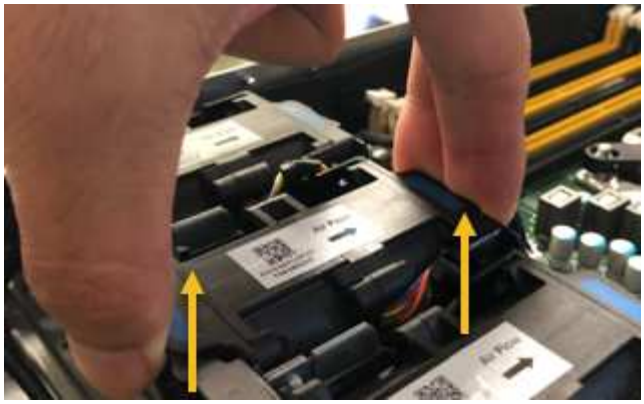

4. Slide the replacement fan into the open slot in the chassis.

   Be sure to align the connector on the fan with the socket in the circuit board.

5. Press the fan’s connector firmly into the circuit board (socket highlighted).

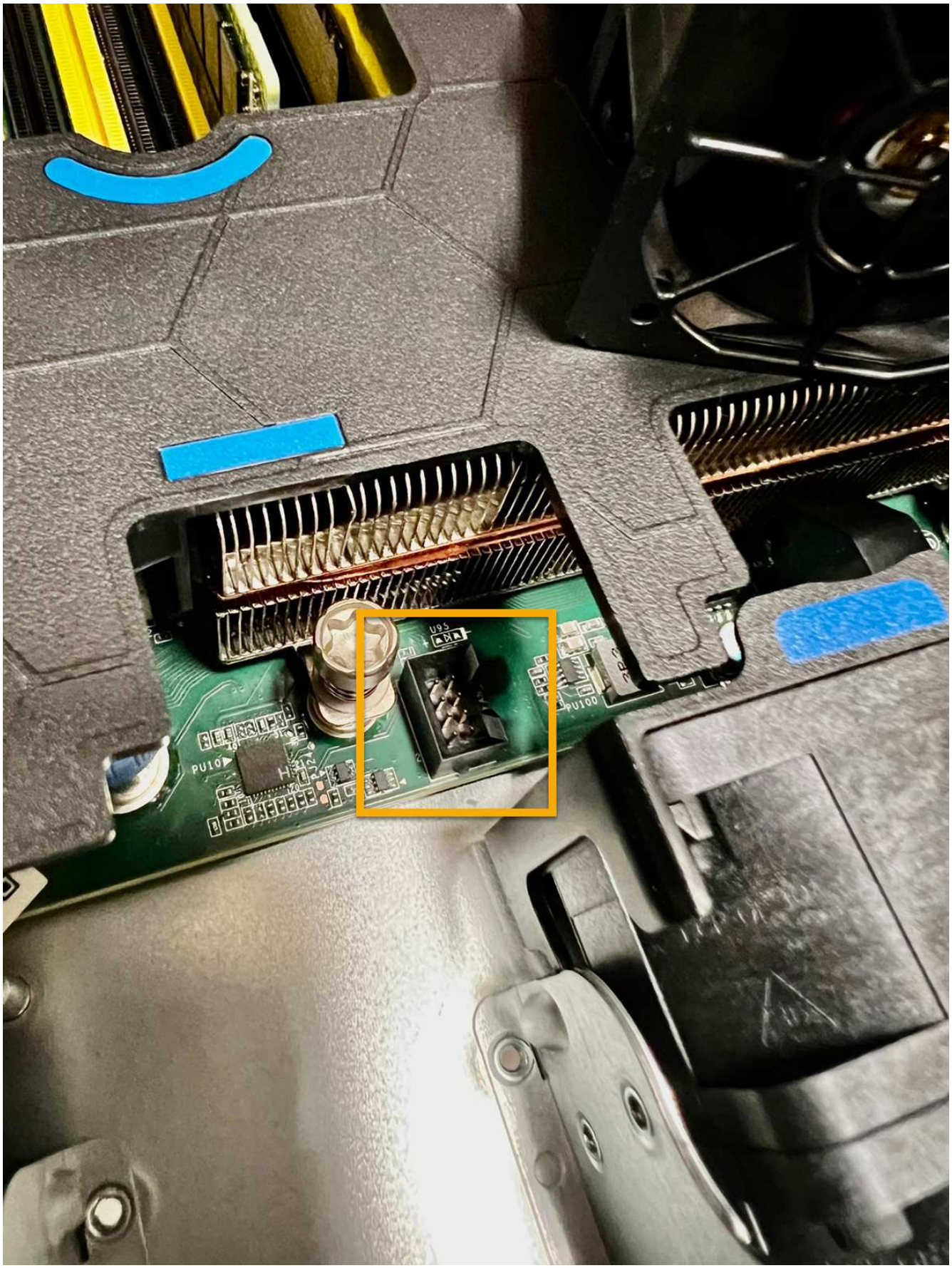

After you finish

1. Put the top cover back on the appliance, and press the latch down to secure the cover in place.
2. Power on the appliance and monitor the appliance LEDs and boot-up codes.

   Use the BMC interface to monitor boot-up status.

3. Confirm that the appliance node appears in the Grid Manager and that no alerts appear.

After replacing the part, return the failed part to NetApp, as described in the RMA instructions shipped with the kit. See the Part Return & Replacements page for further information.

Replace drives in the SGF6112

The SGF6112 storage appliance contains 12 SSD drives. Data on the drives is protected by a RAID scheme that enables the appliance to recover from any single drive failure without having to copy data from another node.

The failure of a second drive before an initial drive failure has been corrected might require data be copied from other nodes to restore redundancy. This restoration of redundancy can take longer, and might be impossible, if single-copy ILM rules are in use or were used in the past, or if data redundancy has been impacted by failures on other nodes. Therefore, if one of the SGF6112 drives fails, you must replace it as soon as possible to ensure redundancy.

Before you begin

- You have physically located the appliance.
- You have verified which drive has failed by noting that the drive's left LED is solid amber or using the Grid Manager to view the alert caused by the failed drive.

  See the information about viewing status indicators to verify the failure.

- You have obtained the replacement drive.
- You have obtained proper ESD protection.

Steps

1. Verify that the drive's left fault LED is amber or use the drive slot ID from the alert to locate the drive.

   The twelve drives are in the following positions in the chassis (front of chassis with bezel removed shown):

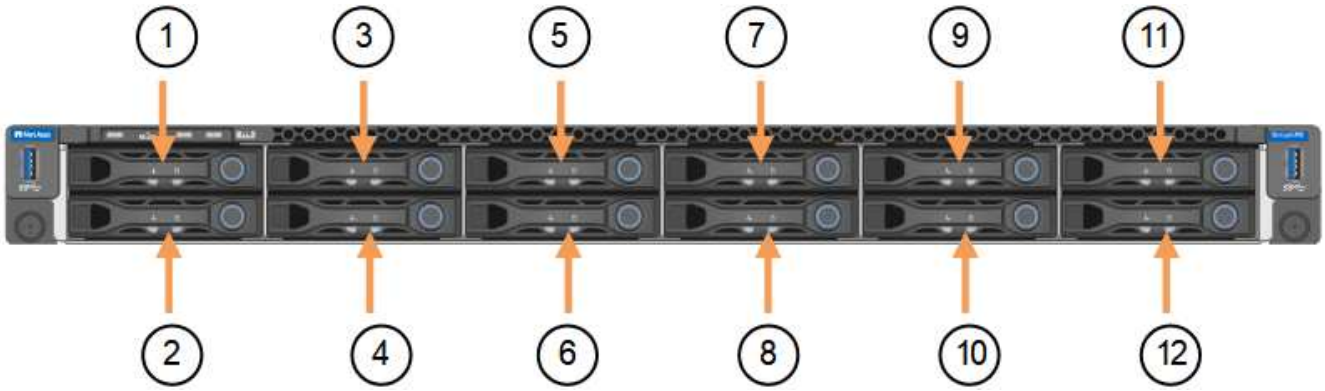

Position	Drive
1	HDD00
2	HDD01
3	HDD02
4	HDD03
5	HDD04
6	HDD05
7	HDD06
8	HDD07
9	HDD08
10	HDD09
11	HDD10
12	HDD11

You can also use the Grid Manager to monitor the status of the SSD drives. Select **NODES**. Then select `Storage Node` > **Hardware**. If a drive has failed, the Storage RAID Mode field contains a message about which drive has failed.

2. Wrap the strap end of the ESD wristband around your wrist, and secure the clip end to a metal ground to prevent static discharge.
3. Unpack the replacement drive, and set it on a static-free, level surface near the appliance.

   Save all packing materials.

4. Press the release button on the failed drive.

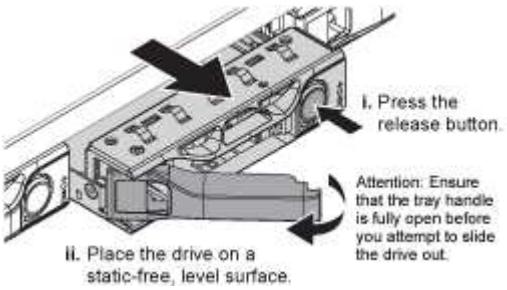

The handle on the drive springs open partially, and the drive releases from the slot.

5. Open the handle, slide the drive out, and place it on a static-free, level surface.
6. Press the release button on the replacement drive before you insert it into the drive slot.

   The latch springs open.

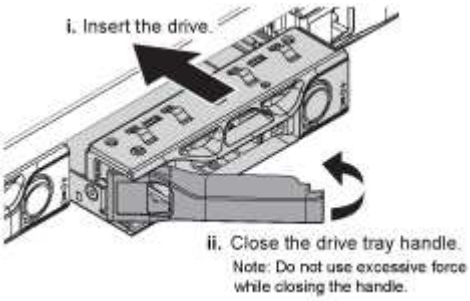

7. Insert the replacement drive in the slot, and then close the drive handle.

   Don't use excessive force while closing the handle.

   When the drive is fully inserted, you hear a click.

   The replaced drive is automatically rebuilt with mirrored data from the working drives. The drive LED should blink initially, but then stop blinking as soon as the system determines that the drive has enough capacity and is functional.

   You can check the status of the rebuild by using the Grid Manager.

8. If more than one drive failed and has been replaced, you might have alerts indicating that some volumes need to have data restored to them. If you receive an alert, before attempting volume recovery, select **NODES** > `appliance Storage Node` > **Hardware**. In the StorageGRID Appliance section of the page, verify that the Storage RAID mode is healthy or rebuilding. If the status lists one or more failed drives, correct this condition before attempting volume restoration.
9. In the Grid Manager, go to **NODES** > `appliance Storage Node` > **Hardware**. In the StorageGRID Appliance section of the page, verify that the Storage RAID mode is healthy.

After replacing the part, return the failed part to NetApp, as described in the RMA instructions shipped with the kit. See the Part Return & Replacements page for further information.

Replace NIC in the SGF6112

You might need to replace a Network Interface Card (NIC) in the SGF6112 if it is not functioning optimally or if it has failed.

Use these procedures to:

- Remove the NIC
- Reinstall the NIC

Remove the NIC

Before you begin

- You have the correct replacement NIC.
- You have determined the location of the NIC to replace.
- You have physically located the SGF6112 appliance where you are replacing the NIC in the data center.

> A controlled shutdown of the appliance is required before removing the appliance from the rack.

- You have disconnected all cables and removed the appliance cover.

About this task

To prevent service interruptions, confirm that all other Storage Nodes are connected to the grid before starting the Network Interface Card (NIC) replacement or replace the NIC during a scheduled maintenance window when periods of service disruption are acceptable. See the information about monitoring node connection states.

> If you have ever used an ILM rule that creates only one copy of an object, you must replace the NIC during a scheduled maintenance window. Otherwise, you might temporarily lose access to those objects during this procedure. See information about why you should not use single-copy replication.

Steps

1. Wrap the strap end of the ESD wristband around your wrist, and secure the clip end to a metal ground to prevent static discharge.
2. Locate the riser assembly that contains the NIC at the rear of the appliance.

   The three NICs in the appliance are in two riser assemblies in the positions in the chassis shown in the photograph (Rear of appliance with top cover removed shown):

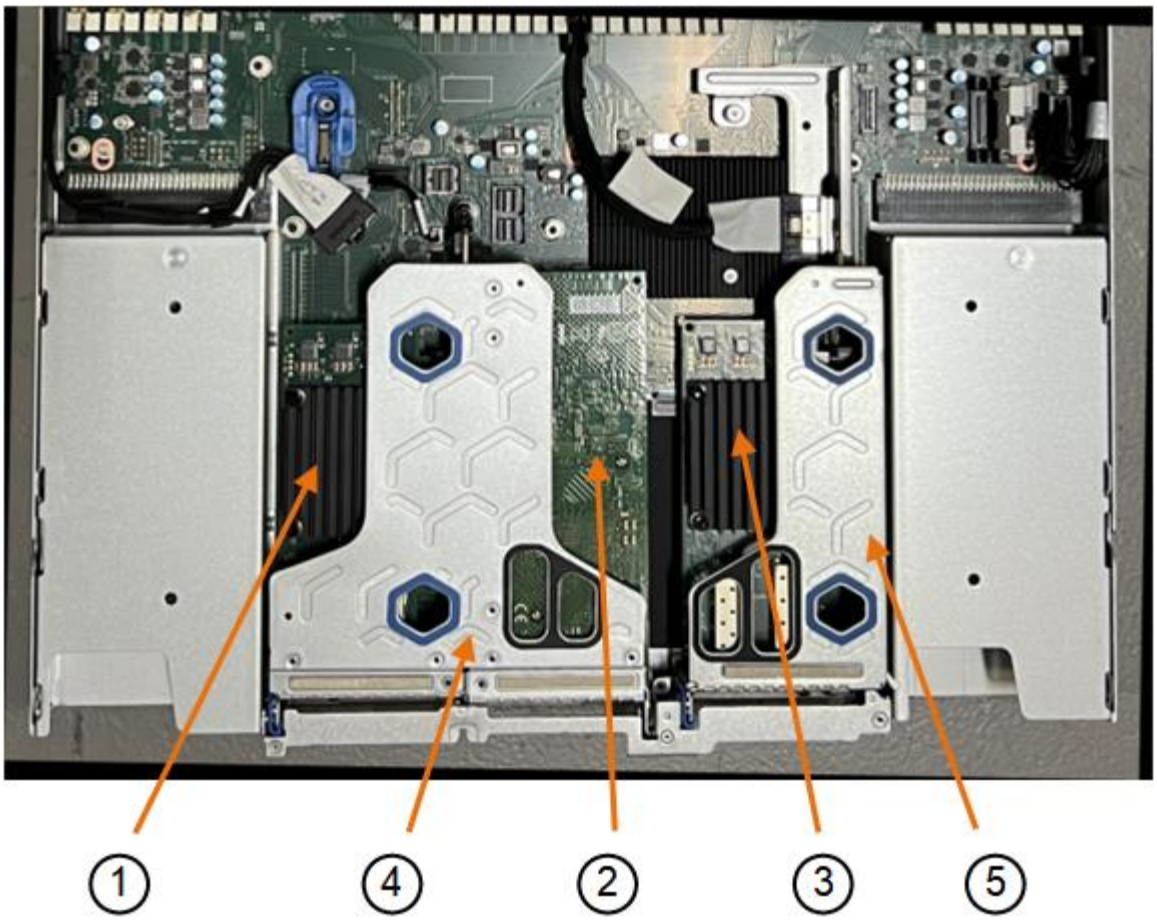

	Device or Part name	Description
1	hic1/hic2	10/25-GbE Ethernet network ports in the two-port riser assembly
2	mtc1/mtc2	1/10GBase-T management ports in the two-port riser assembly
3	hic3/hic4	10/25-GbE Ethernet network ports in the one-port riser assembly
4	Two-slot riser assembly	Support for one of the 10/25-GbE NICs and the 1/10GBase-T NIC
5	One-slot riser assembly	Support for one of the 10/25-GbE NICs

3. Grasp the riser assembly with the failed NIC through the blue-marked holes and carefully lift it upwards. Move the riser assembly toward the front of the chassis as you lift it to allow the external connectors in its installed NICs to clear the chassis.
4. Place the riser on a flat anti-static surface with the metal frame side down to access the NICs.
    - **Two-slot riser assembly with two NICs**

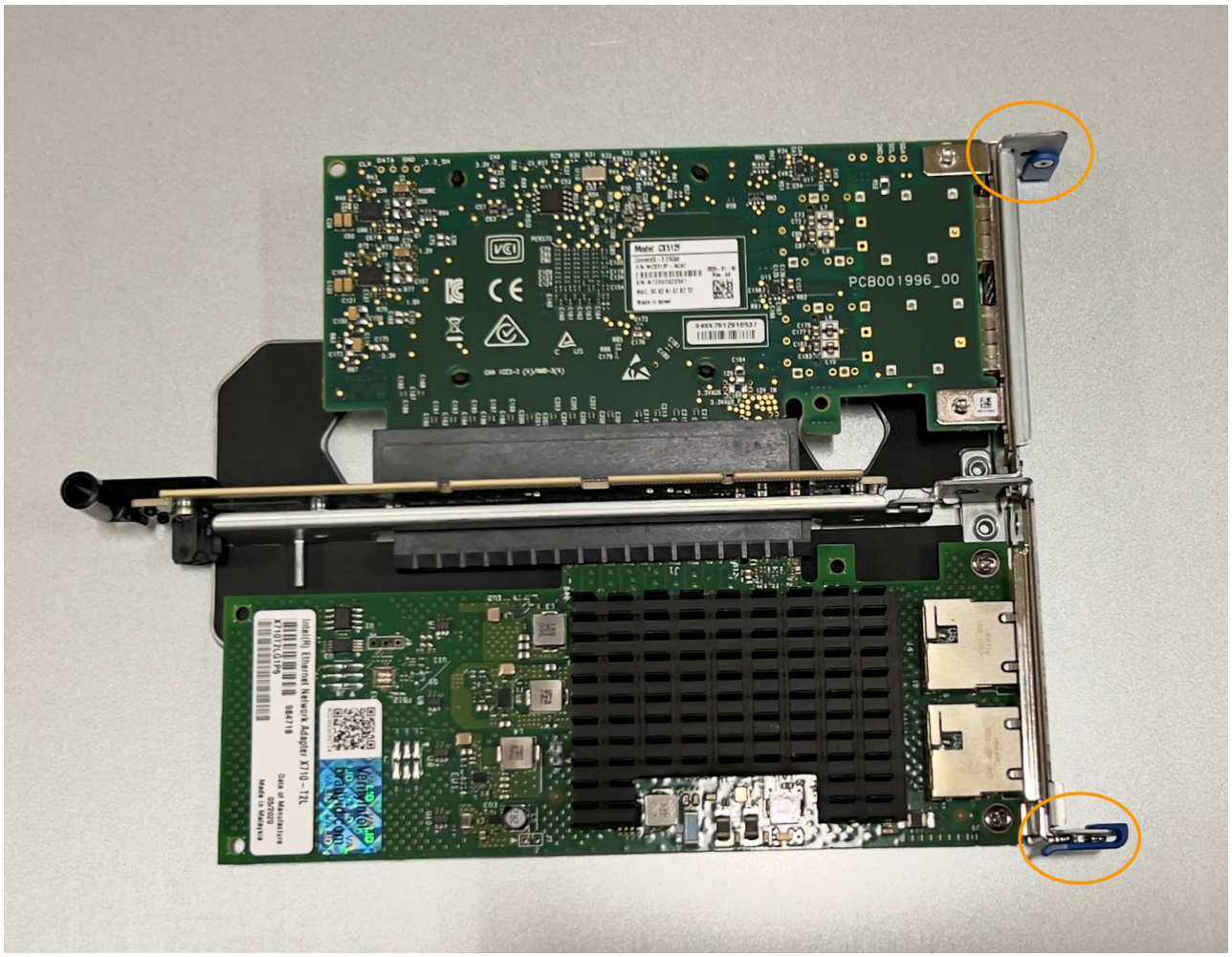

- **One-slot riser assembly with one NIC**

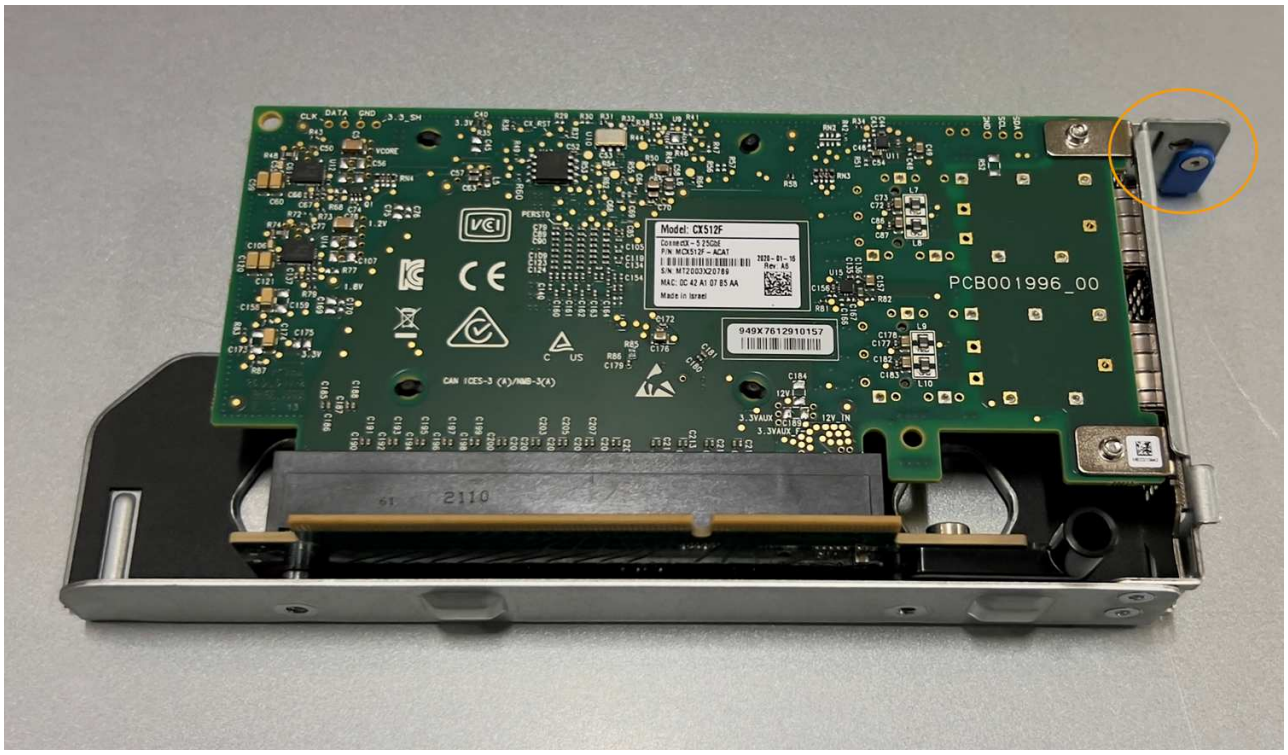

5. Open the blue latch (circled) on the NIC to be replaced and carefully remove the NIC from the riser assembly. Rock the NIC slightly to help remove the NIC from its connector. Don't use excessive force.
6. Place the NIC on a flat anti-static surface.

Reinstall the NIC

Install the replacement NIC into the same location as the one that was removed.

Before you begin

- You have the correct replacement NIC.
- You have removed the existing failed NIC.

Steps

1. Wrap the strap end of the ESD wristband around your wrist, and secure the clip end to a metal ground to prevent static discharge.
2. Remove the replacement NIC from its packaging.
3. If you are replacing one of the NICs in the two-slot riser assembly, do the following:
   a. Ensure the blue latch is in the open position.
   b. Align the NIC with its connector on the riser assembly. Carefully press the NIC into the connector until it is fully seated, as shown in the photograph, and then close the blue latch.

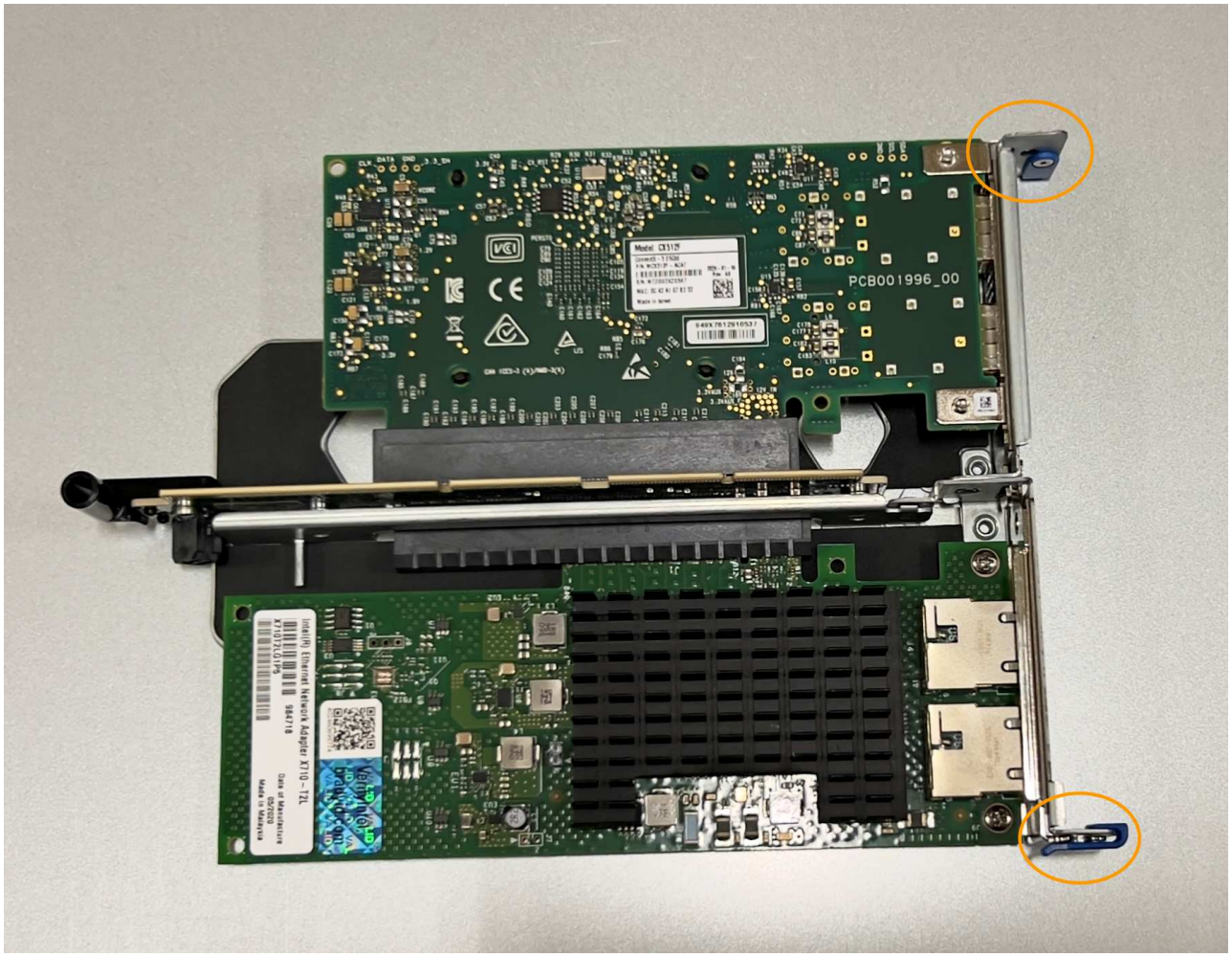

c. Locate the alignment hole on the two-slot riser assembly (circled) that aligns with a guide pin on the system board to ensure correct riser assembly positioning.

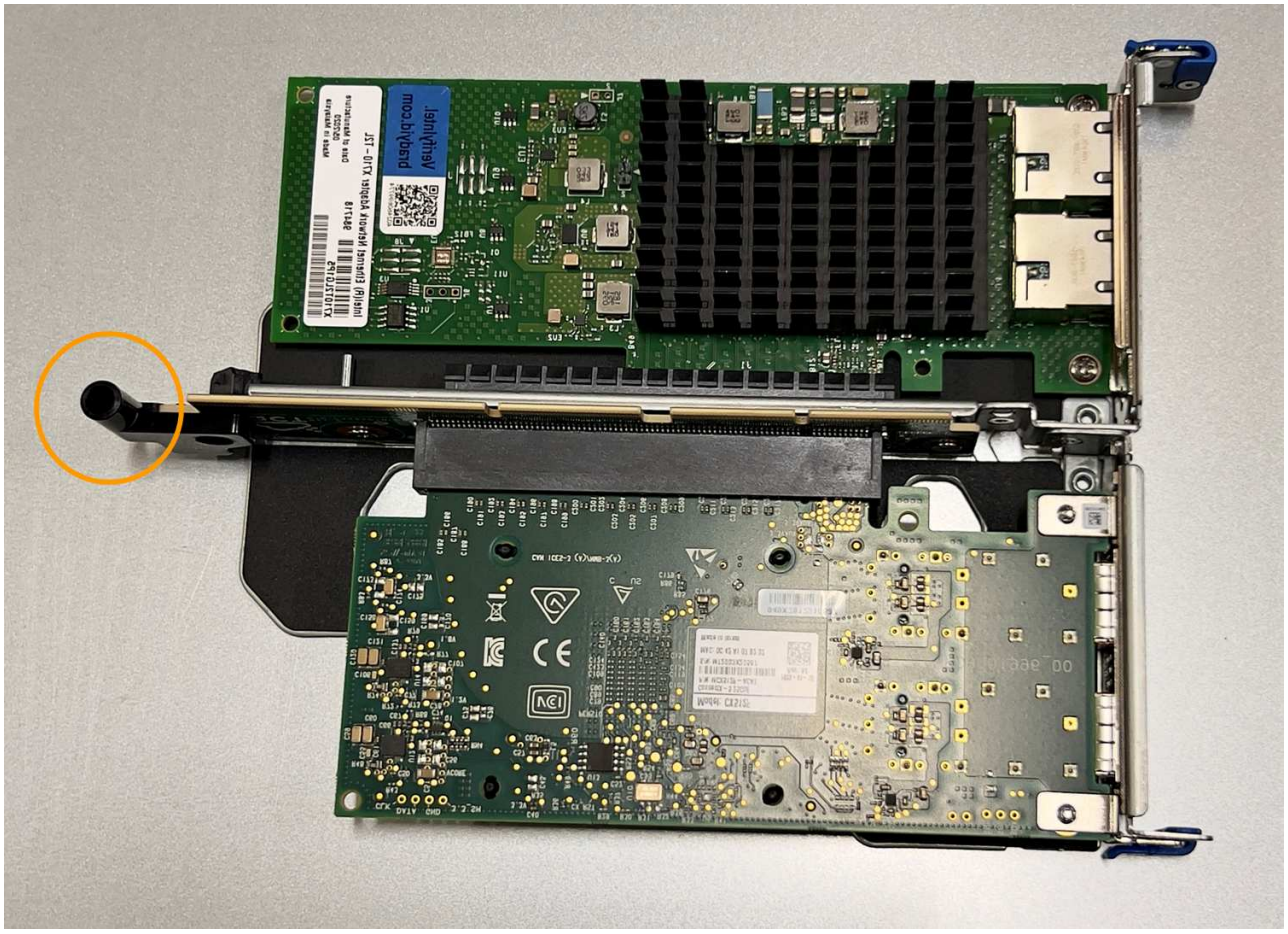

d. Locate the guide pin on the system board

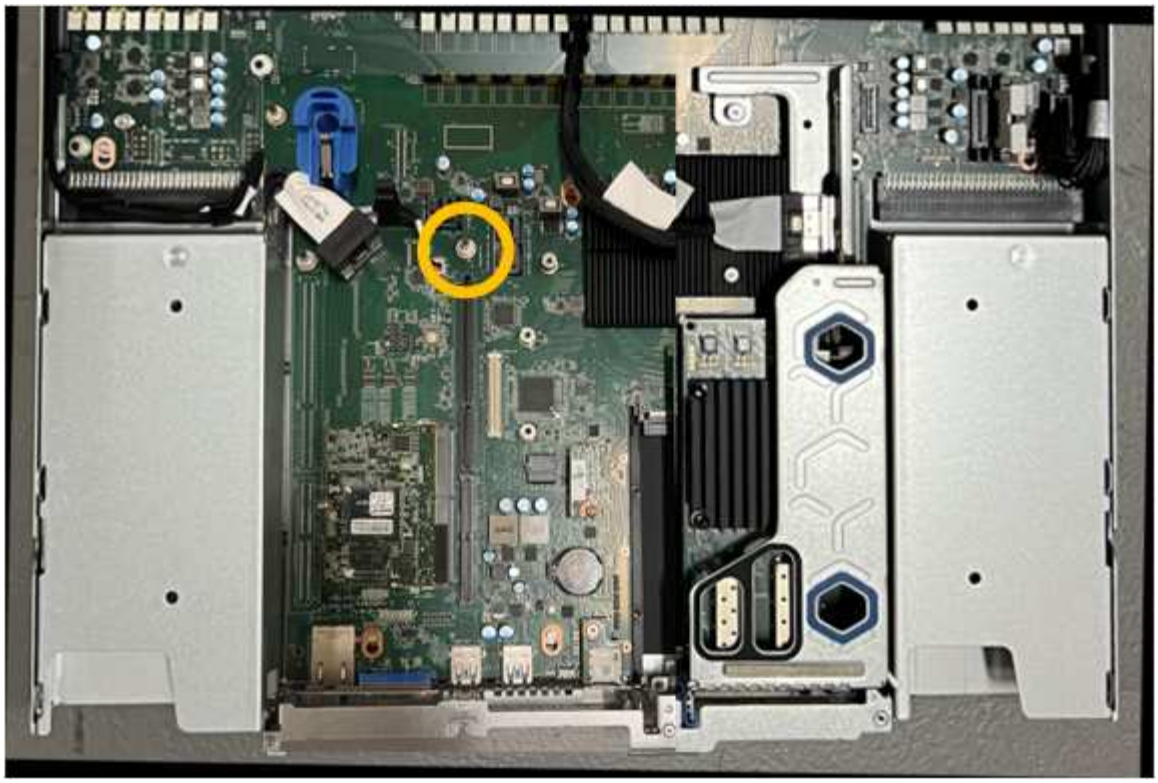

e. Position the riser assembly in the chassis, making sure that it aligns with the connector on the system board and guide pin.

f. Carefully press the two-slot riser assembly in place along its center line, next to the blue-marked holes, until it is fully seated.

4. If you are replacing the NIC in the one-slot riser assembly, do the following:

   a. Ensure the blue latch is in the open position.

   b. Align the NIC with its connector on the riser assembly. Carefully press the NIC into the connector until it is fully seated as shown in the photograph and close the blue latch.

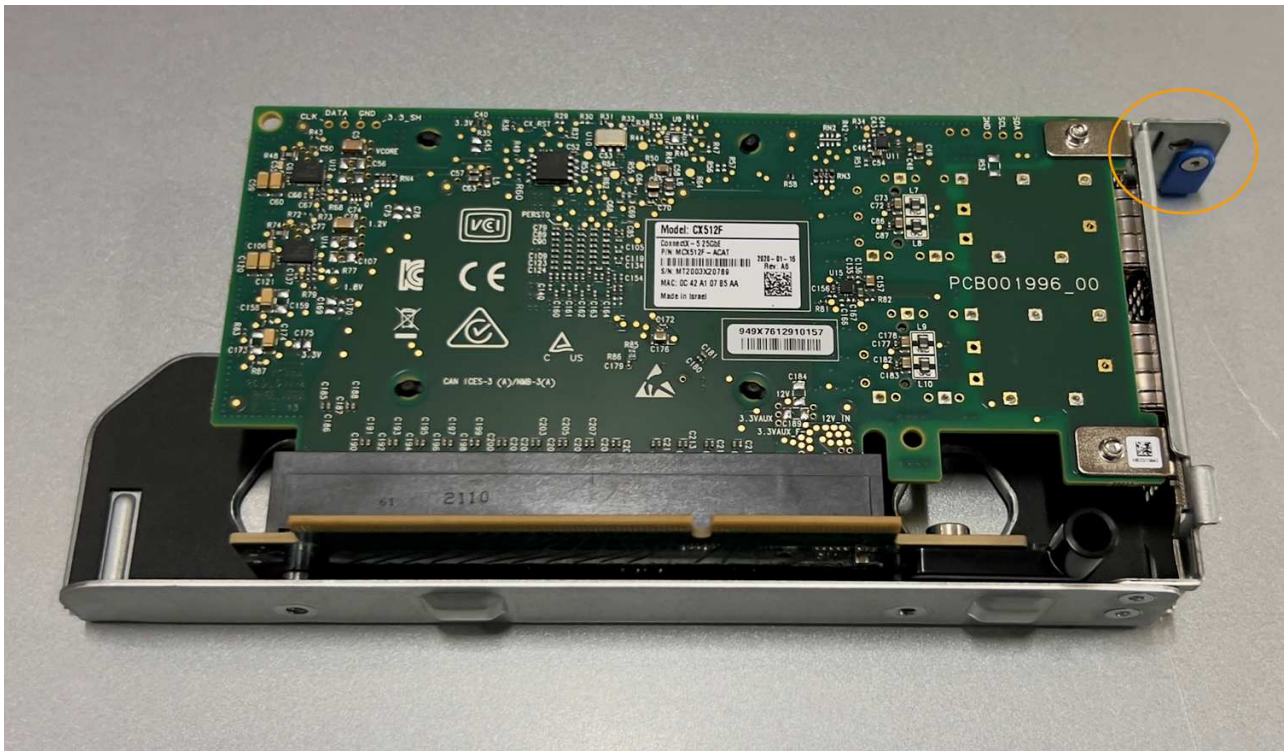

c. Locate the alignment hole on the one-slot riser assembly (circled) that aligns with a guide pin on the system board to ensure correct riser assembly positioning.

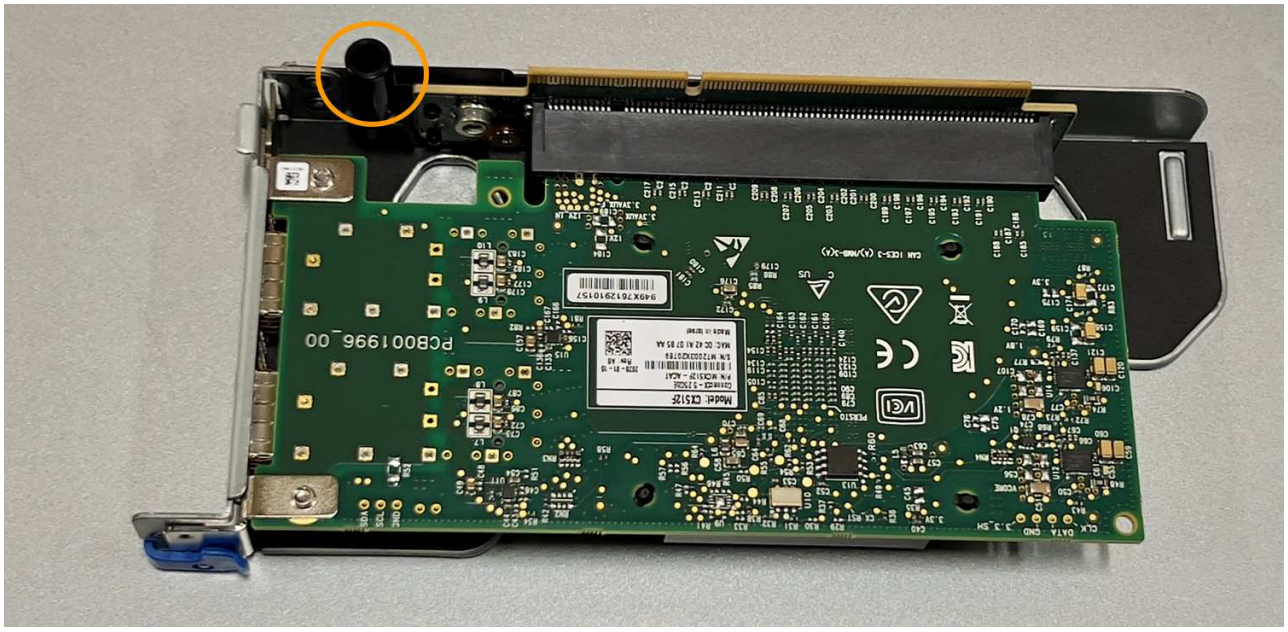

d. Locate the guide pin on the system board

e. Position the one-slot riser assembly in the chassis, making sure that it aligns with the connector on the system board and guide pin.

f. Carefully press the one-slot riser assembly in place along its center line, next to the blue-marked holes, until it is fully seated.

5. Remove the protective caps from the NIC ports where you will be reinstalling cables.

After you finish

If you have no other maintenance procedures to perform in the appliance, reinstall the appliance cover, return the appliance to the rack, attach cables, and apply power.

After replacing the part, return the failed part to NetApp, as described in the RMA instructions shipped with the kit. See the Part Return & Replacements page for further information.

Replace SGF6112 CMOS battery

Use this procedure to replace the CMOS coin cell battery on the system board.

Use these procedures to:

- Remove the CMOS battery
- Reinstall the CMOS battery

Remove the CMOS battery

Before you begin

- You have verified the appliance where the CMOS battery needs to be replaced.
- You have physically located the SGF6112 appliance where you are replacing the CMOS battery in the data center.

A controlled shutdown of the appliance is required before removing the appliance from the rack.

- You have disconnected all cables and removed the appliance cover.

About this task

To prevent service interruptions, confirm that all other Storage Nodes are connected to the grid before starting the CMOS battery replacement or replace the battery during a scheduled maintenance window when periods of service disruption are acceptable. See the information about monitoring node connection states.

If you have ever used an ILM rule that creates only one copy of an object, you must replace the battery during a scheduled maintenance window. Otherwise, you might temporarily lose access to those objects during this procedure. See information about why you should not use single-copy replication.

Steps

1. Wrap the strap end of the ESD wristband around your wrist, and secure the clip end to a metal ground to prevent static discharge.
2. Locate the two-slot riser assembly at the rear of the appliance.

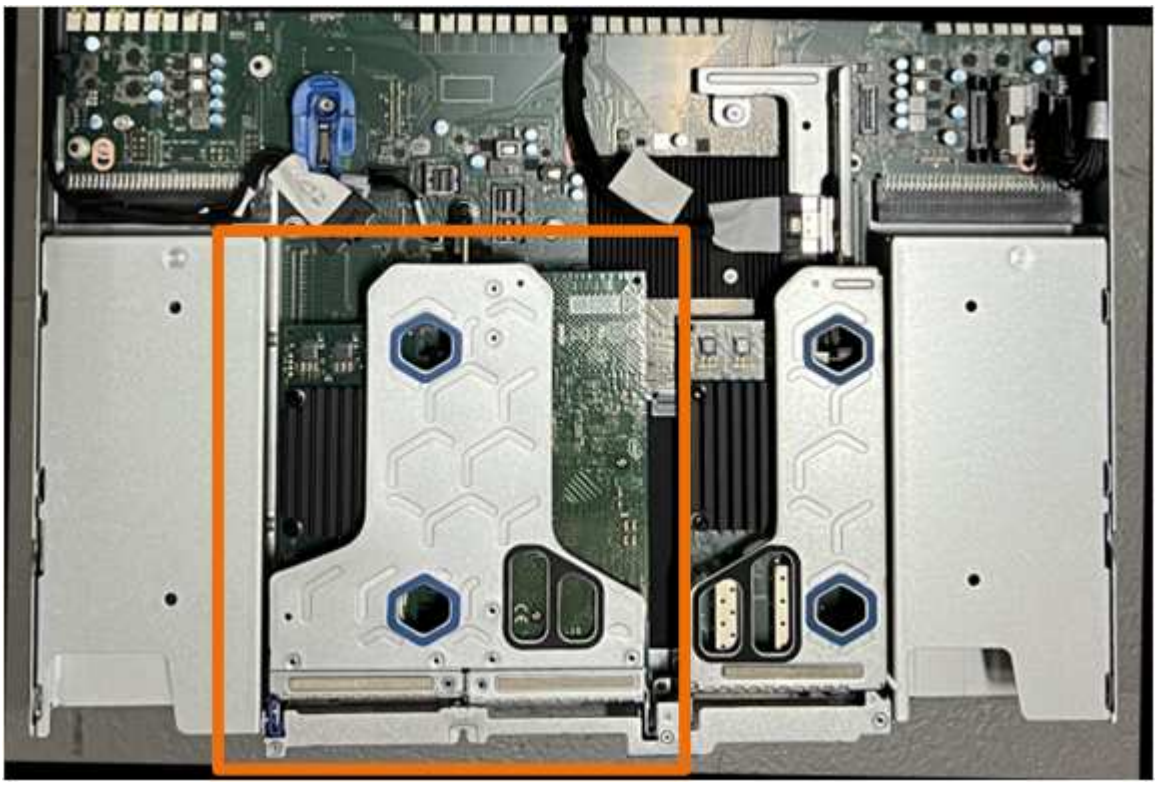

3. Grasp the riser assembly through the blue-marked holes and carefully lift it upwards. Move the riser assembly toward the front of the chassis as you lift it to allow the external connectors in its installed NICs to clear the chassis.
4. Place the riser on a flat anti-static surface with the metal frame side down.
5. Locate the CMOS battery on the system board in the position beneath the removed riser assembly.

6. Use your finger or a plastic pry tool to press the retaining clip (highlighted) away from the battery to spring it from the socket.

7. Remove the battery and dispose of it properly.

Reinstall the CMOS battery

Install the replacement CMOS battery into the socket on the system board.

Before you begin

- You have the correct replacement CMOS battery (CR2032).
- You have removed the failed CMOS battery.

Steps

1. Wrap the strap end of the ESD wristband around your wrist, and secure the clip end to a metal ground to prevent static discharge.
2. Remove the CMOS battery from its packaging.
3. Press the replacement battery into the empty socket on the system board with the positive (+) side up until the battery snaps in place.
4. Locate the alignment hole on the two-slot riser assembly (circled) that aligns with the guide pin on the system board to ensure correct riser assembly positioning.

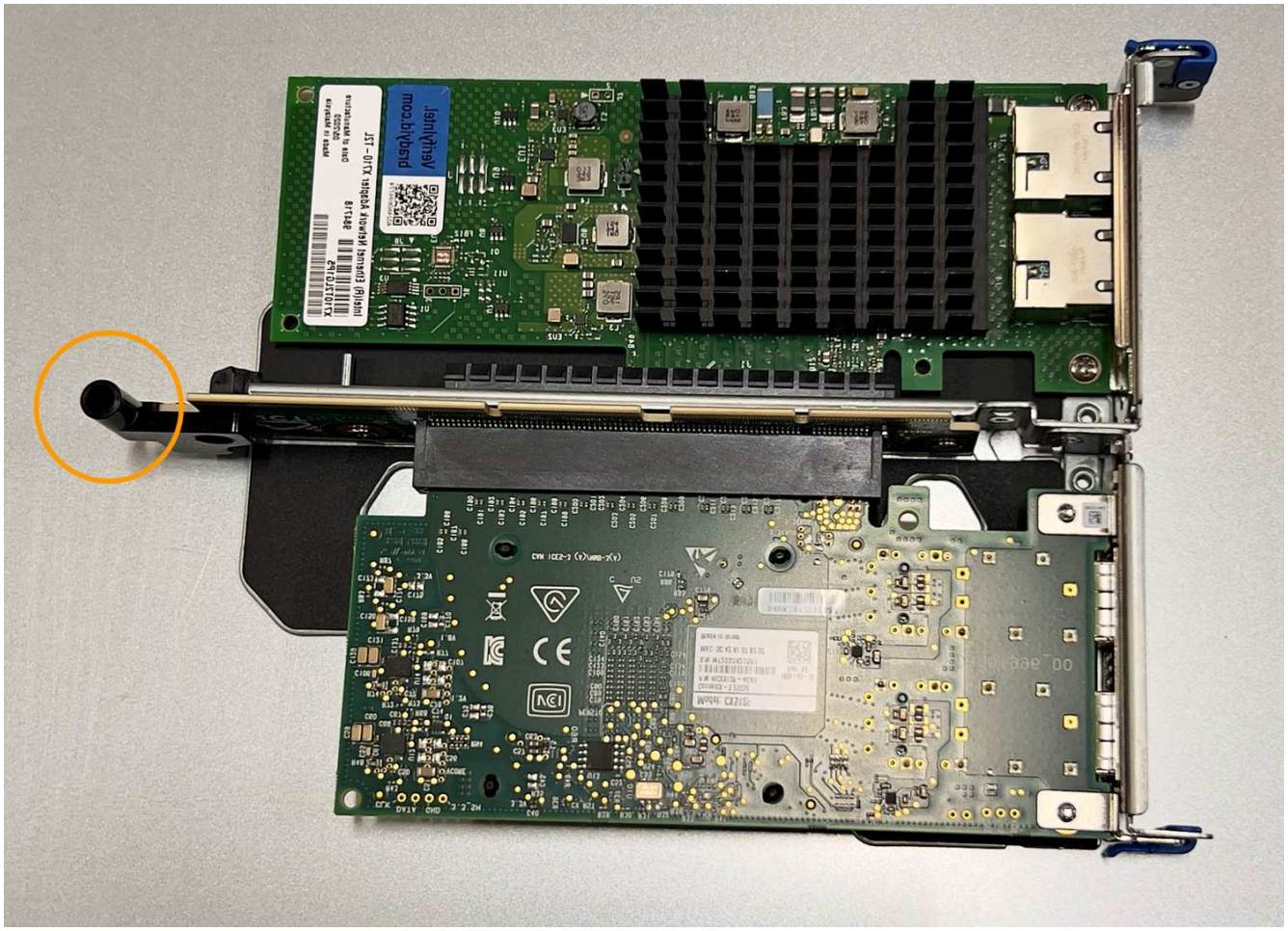

5. Locate the guide pin on the system board.

6. Position the riser assembly in the chassis, making sure that it aligns with the connector on the system board and guide pin.
7. Carefully press the two-slot riser assembly in place along its center line, next to the blue-marked holes, until it is fully seated.
8. If you have no other maintenance procedures to perform in the appliance, reinstall the appliance cover, return the appliance to the rack, attach cables, and apply power.
9. If the appliance you replaced had drive encryption enabled for the SED drives, you must enter the drive encryption passphrase to access the encrypted drives when the replacement appliance starts for the first time.
10. If the appliance you replaced used a key management server (KMS) to manage encryption keys for node encryption, additional configuration might be required before the node can join the grid. If the node does not automatically join the grid, make sure that these configuration settings have transferred to the new appliance and manually configure any settings that don't have the expected configuration:
    - Configure StorageGRID connections
    - Configure node encryption for the appliance
11. Log in to the appliance:
    a. Enter the following command: `ssh admin@grid_node_IP`
    b. Enter the password listed in the `Passwords.txt` file.
    c. Enter the following command to switch to root: `su -`
    d. Enter the password listed in the `Passwords.txt` file.
12. Restore BMC network connectivity for the appliance using one of these options:
    - Use static IP, netmask, and gateway
    - Use DHCP to obtain an IP, netmask, and gateway

a. To restore the BMC configuration to use a static IP, netmask, and gateway, enter the following commands:

```
run-host-command ipmitool lan set 1 ipsrc static

run-host-command ipmitool lan set 1 ipaddr Appliance_IP

run-host-command ipmitool lan set 1 netmask Netmask_IP

run-host-command ipmitool lan set 1 defgw ipaddr Default_gateway
```

b. To restore the BMC configuration to use DHCP to obtain an IP, netmask, and gateway, enter the following command:

```
run-host-command ipmitool lan set 1 ipsrc dhcp
```

13. After restoring BMC network connectivity, connect to the BMC interface to audit and restore any additional custom BMC configuration you might have applied. For example, you should confirm the settings for SNMP trap destinations and email notifications. See Configure BMC interface.
14. Confirm that the appliance node appears in the Grid Manager and that no alerts appear.

Replace SGF6112 cover

Remove the appliance cover to access internal components for maintenance, and replace the cover when you are finished.

Remove cover

Before you begin

Remove the appliance from the cabinet or rack to access the top cover.

Steps

1. Make sure that the appliance cover latch is not locked. If necessary, turn the blue plastic latch lock one-quarter turn in the unlock direction, as shown on the latch lock.
2. Rotate the latch up and back toward the rear of the appliance chassis until it stops; then, carefully lift the cover from the chassis and set it aside.

Wrap the strap end of an ESD wristband around your wrist and secure the clip end to a metal ground to prevent static discharge when working inside the appliance.

Reinstall cover

Before you begin

You have completed all maintenance procedures inside the appliance.

Steps

1. With the cover latch open, hold the cover above the chassis and align the hole in the top cover latch with the pin in the chassis. When the cover is aligned, lower it onto the chassis.

2. Rotate the cover latch forward and down until it stops and the cover fully seats into the chassis. Verify that there are no gaps along the front edge of the cover.

   If the cover is not fully seated, you might not be able to slide the appliance into the rack.

3. Optional: Turn the blue plastic latch lock one-quarter turn in the lock direction, as shown on the latch lock, to lock it.

After you finish

Reinstall the appliance in the cabinet or rack.

Replace SGF6112 appliance

You might need to replace the appliance if it is not functioning optimally or if it has failed.

Before you begin

- You have a replacement appliance with the same part number as the appliance you are replacing.
- You have labels to identify each cable that is connected to the appliance.
- You have physically located the appliance.

About this task

The StorageGRID node will not be accessible while you replace the appliance. If the appliance is functioning sufficiently, you can perform a controlled shutdown at the start of this procedure.

> If you are replacing the appliance before installing StorageGRID software, you might not be able to access the StorageGRID Appliance Installer immediately after completing this procedure. While you can access the StorageGRID Appliance Installer from other hosts on the same subnet as the appliance, you can't access it from hosts on other subnets. This condition should resolve itself within 15 minutes (when any ARP cache entries for the original appliance time out), or you can clear the condition immediately by purging any old ARP cache entries manually from the local router or gateway.

Steps

1. Display the current configurations of the appliance and record them.
   a. Log in to the appliance to be replaced:
      i. Enter the following command: `ssh admin@grid_node_IP`
      ii. Enter the password listed in the `Passwords.txt` file.
      iii. Enter the following command to switch to root: `su -`
      iv. Enter the password listed in the `Passwords.txt` file.

      When you are logged in as root, the prompt changes from `$` to `#`.

   b. Enter: **`run-host-command ipmitool lan print`** to display the current BMC configurations for the appliance.
2. Shut down the appliance.
3. If any of the network interfaces on this StorageGRID appliance are configured for DHCP, you need to update the permanent DHCP lease assignments on the DHCP servers to reference the MAC addresses of the replacement appliance. This ensures that the appliance is assigned the expected IP addresses.

   Contact your network or DHCP-server administrator to update the permanent DHCP lease assignments. The administrator can determine the MAC addresses of the replacement appliance from the DHCP server logs or by inspecting the MAC address tables in the switches to which the appliance Ethernet ports are connected.

4. Remove and replace the appliance:

a. Label the cables and then disconnect the cables and any network transceivers.

> To prevent degraded performance, don't twist, fold, pinch, or step on the cables.

b. Remove the failed appliance from the cabinet or rack.

c. Note the position of the replaceable components (two power supplies, three NICs, and twelve SSDs) in the failed appliance.

The twelve drives are in the following positions in the chassis (front of chassis with bezel removed shown):

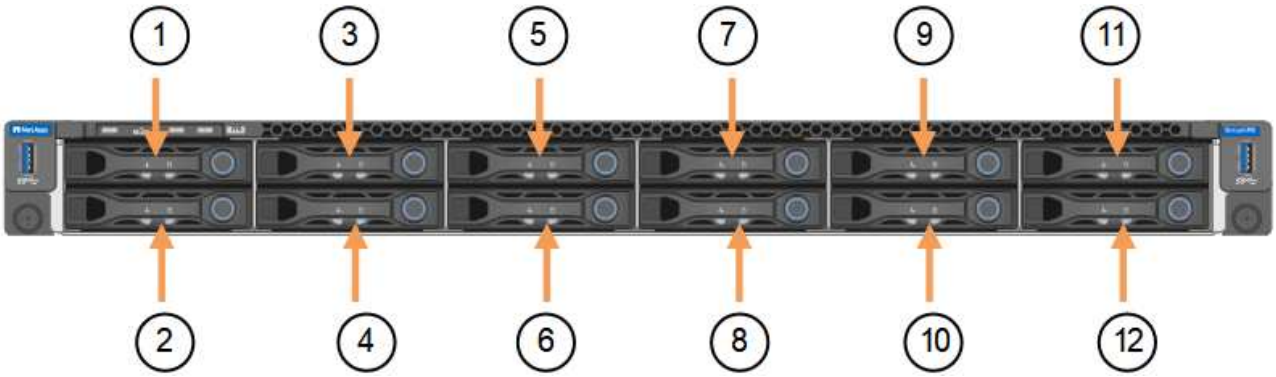

	Drive
1	HDD00
2	HDD01
3	HDD02
4	HDD03
5	HDD04
6	HDD05
7	HDD06
8	HDD07
9	HDD08
10	HDD09
11	HDD10
12	HDD11

d. Transfer the replaceable components to the replacement appliance.

   Follow the maintenance instructions provided for reinstalling the replaceable components.

   > If you wish to retain the data on the drives, be sure to insert the SSD drives into the same drive slots they occupied in the failed appliance. If you don't, the Appliance Installer will display a warning message and you will have to put the drives into the correct slots and reboot the appliance before the appliance can rejoin the grid.

e. Install the replacement appliance into the cabinet or rack.

f. Replace the cables and any optical transceivers.

5. Power on the appliance.
6. If the appliance you replaced had hardware drive encryption enabled for the SED drives, you must enter the drive encryption passphrase to access the encrypted drives when the replacement appliance starts for the first time.
7. Wait for the appliance to rejoin the grid. If the appliance does not rejoin the grid, follow the guidance on the StorageGRID Appliance Installer home page to address any issues.

   > To prevent data loss if the Appliance Installer indicates that physical hardware changes are required, such as moving disk drives to different slots, power down the appliance before making hardware changes.

8. If the appliance you replaced used a key management server (KMS) to manage encryption keys for node encryption, additional configuration might be required before the node can join the grid. If the node does not automatically join the grid, make sure that these configuration settings have transferred to the new appliance and manually configure any settings that don't have the expected configuration:
   - Configure StorageGRID connections
   - Configure node encryption for the appliance
9. Log in to the replaced appliance:

   a. Enter the following command: `ssh admin@grid_node_IP`

   b. Enter the password listed in the `Passwords.txt` file.

   c. Enter the following command to switch to root: `su -`

   d. Enter the password listed in the `Passwords.txt` file.

10. Restore BMC network connectivity for the replaced appliance. There are two options:
    - Use static IP, netmask, and gateway
    - Use DHCP to obtain an IP, netmask, and gateway

      a. To restore the BMC configuration to use a static IP, netmask, and gateway, enter the following commands:

      ```
      run-host-command ipmitool lan set 1 ipsrc static

      run-host-command ipmitool lan set 1 ipaddr Appliance_IP

      run-host-command ipmitool lan set 1 netmask Netmask_IP

      run-host-command ipmitool lan set 1 defgw ipaddr Default_gateway
      ```

b. To restore the BMC configuration to use DHCP to obtain an IP, netmask, and gateway, enter the following command:

```
run-host-command ipmitool lan set 1 ipsrc dhcp
```

11. After restoring BMC network connectivity, connect to the BMC interface to audit and restore any additional custom BMC configuration you might have applied. For example, you should confirm the settings for SNMP trap destinations and email notifications. See Configure BMC interface.
12. Confirm that the appliance node appears in the Grid Manager and that no alerts appear.

After you finish

After replacing the part, return the failed part to NetApp, as described in the RMA instructions shipped with the kit. See the Part Return & Replacements page for further information.

Related information

View status indicators

View boot-up codes for appliance

Relocate SGF6112 in cabinet or rack

Remove the SGF6112 from a cabinet or rack to access the top cover or to move the appliance to a different location, then reinstall the appliance into a cabinet or rack when hardware maintenance is complete.

Remove SGF6112 from cabinet or rack

Before you begin

- You have labels to identify each cable that is connected to the SGF6112.
- You have physically located the SGF6112 where you are performing maintenance in the data center.
- You have shut down the SGF6112.

> Don’t shut down the appliance using the power switch.

Steps

1. Label and then disconnect the appliance power cables.
2. Wrap the strap end of the ESD wristband around your wrist, and secure the clip end to a metal ground to prevent static discharge.
3. Label and then disconnect the appliance data cables and any SFP+ or SFP28 transceivers.

> To prevent degraded performance, don’t twist, fold, pinch, or step on the cables.

4. Loosen the two captive screws on the appliance front panel.

5. Slide the SGF6112 forward out of the rack until the mounting rails are fully extended and you hear the latches on both sides click.

   The appliance top cover is accessible.

6. Optional: If you are fully removing the appliance from the cabinet or rack, follow the instructions for the rail kit to remove the appliance from the rails.

After replacing the part, return the failed part to NetApp, as described in the RMA instructions shipped with the kit. See the Part Return & Replacements page for further information.

Reinstall SGF6112 into cabinet or rack

Before you begin

You have reinstalled the appliance cover.

Steps

1. Press the blue rail releases both rack rails at the same time and slide the SGF6112 into the rack until it is fully seated.

   When you can't move the controller any further, pull the blue latches on both sides of the chassis to slide the controller all the way in.

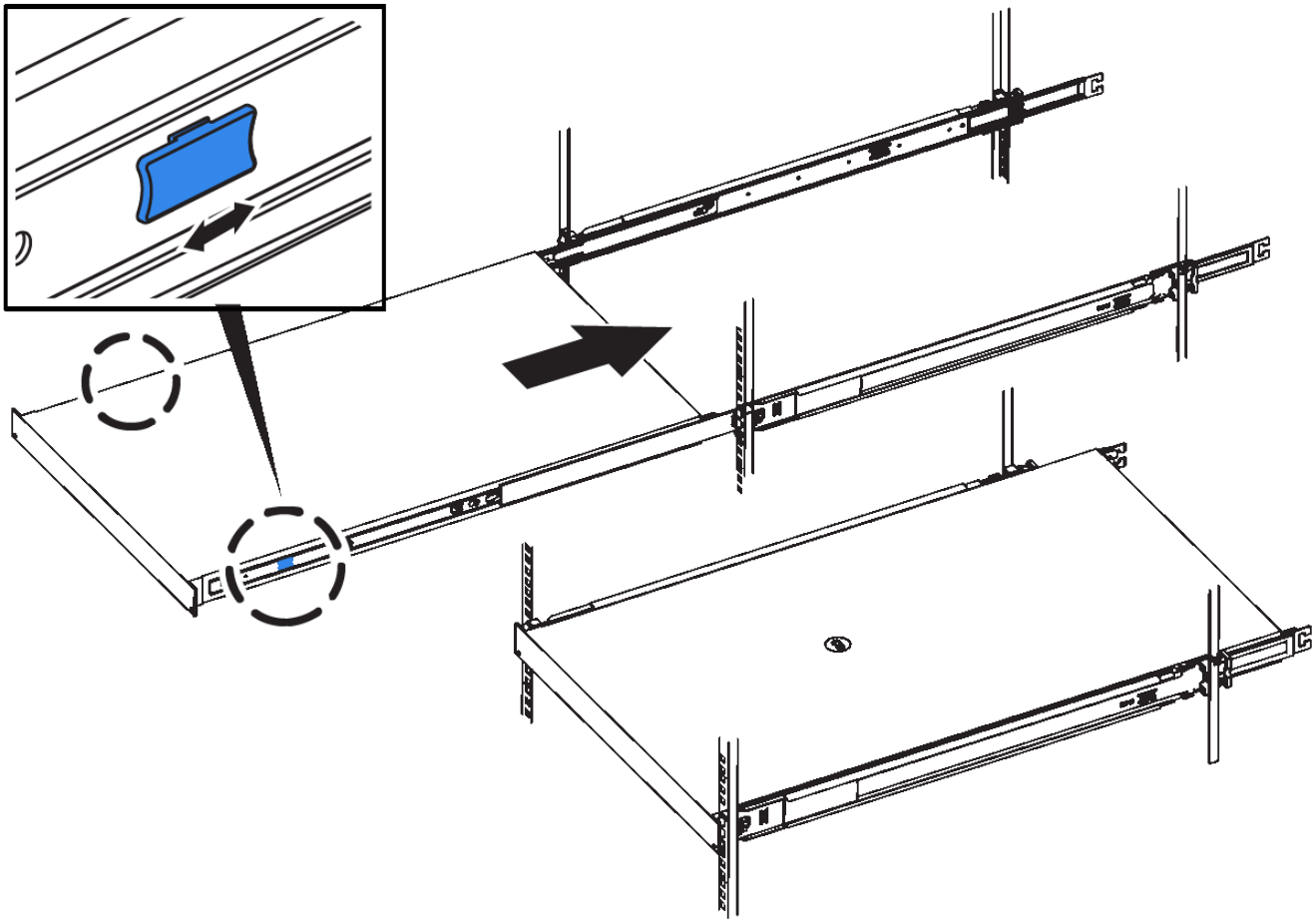

Don't attach the front bezel until after you power on the controller.

2. Tighten the captive screws on the controller front panel to secure the controller in the rack.

3. Wrap the strap end of the ESD wristband around your wrist, and secure the clip end to a metal ground to prevent static discharge.
4. Reconnect the controller data cables and any SFP+ or SFP28 transceivers.

> To prevent degraded performance, don’t twist, fold, pinch, or step on the cables.

5. Reconnect the controller power cables.

After you finish

Restart the appliance.

Copyright information

Copyright © 2024 NetApp, Inc. All Rights Reserved. Printed in the U.S. No part of this document covered by copyright may be reproduced in any form or by any means—graphic, electronic, or mechanical, including photocopying, recording, taping, or storage in an electronic retrieval system—without prior written permission of the copyright owner.

Software derived from copyrighted NetApp material is subject to the following license and disclaimer:

THIS SOFTWARE IS PROVIDED BY NETAPP “AS IS” AND WITHOUT ANY EXPRESS OR IMPLIED WARRANTIES, INCLUDING, BUT NOT LIMITED TO, THE IMPLIED WARRANTIES OF MERCHANTABILITY AND FITNESS FOR A PARTICULAR PURPOSE, WHICH ARE HEREBY DISCLAIMED. IN NO EVENT SHALL NETAPP BE LIABLE FOR ANY DIRECT, INDIRECT, INCIDENTAL, SPECIAL, EXEMPLARY, OR CONSEQUENTIAL DAMAGES (INCLUDING, BUT NOT LIMITED TO, PROCUREMENT OF SUBSTITUTE GOODS OR SERVICES; LOSS OF USE, DATA, OR PROFITS; OR BUSINESS INTERRUPTION) HOWEVER CAUSED AND ON ANY THEORY OF LIABILITY, WHETHER IN CONTRACT, STRICT LIABILITY, OR TORT (INCLUDING NEGLIGENCE OR OTHERWISE) ARISING IN ANY WAY OUT OF THE USE OF THIS SOFTWARE, EVEN IF ADVISED OF THE POSSIBILITY OF SUCH DAMAGE.

NetApp reserves the right to change any products described herein at any time, and without notice. NetApp assumes no responsibility or liability arising from the use of products described herein, except as expressly agreed to in writing by NetApp. The use or purchase of this product does not convey a license under any patent rights, trademark rights, or any other intellectual property rights of NetApp.

The product described in this manual may be protected by one or more U.S. patents, foreign patents, or pending applications.

LIMITED RIGHTS LEGEND: Use, duplication, or disclosure by the government is subject to restrictions as set forth in subparagraph (b)(3) of the Rights in Technical Data -Noncommercial Items at DFARS 252.227-7013 (FEB 2014) and FAR 52.227-19 (DEC 2007).

Data contained herein pertains to a commercial product and/or commercial service (as defined in FAR 2.101) and is proprietary to NetApp, Inc. All NetApp technical data and computer software provided under this Agreement is commercial in nature and developed solely at private expense. The U.S. Government has a non-exclusive, non-transferrable, nonsublicensable, worldwide, limited irrevocable license to use the Data only in connection with and in support of the U.S. Government contract under which the Data was delivered. Except as provided herein, the Data may not be used, disclosed, reproduced, modified, performed, or displayed without the prior written approval of NetApp, Inc. United States Government license rights for the Department of Defense are limited to those rights identified in DFARS clause 252.227-7015(b) (FEB 2014).

Trademark information

NETAPP, the NETAPP logo, and the marks listed at http://www.netapp.com/TM are trademarks of NetApp, Inc. Other company and product names may be trademarks of their respective owners.