Hardware procedures

StorageGRID Appliances

NetApp
March 14, 2024

This PDF was generated from https://docs.netapp.com/us-en/storagegrid-appliances/sg100-1000/replacing-one-or-more-power-supplies-in-services-appliance.html on March 14, 2024. Always check docs.netapp.com for the latest.

Table of Contents

Hardware procedures . . . 1
Replace one or both power supplies in the SG100 or SG1000 . . . 1
Replace fan in SG100 or SG1000 . . . 3
Replace drive in SG100 or SG1000 . . . 5
Replace an SG100 or SG1000 . . . 7

Hardware procedures

Replace one or both power supplies in the SG100 or SG1000

The services appliance has two power supplies for redundancy. If one of the power supplies fails, you must replace it as soon as possible to ensure that the compute controller has redundant power. Both power supplies operating in the controller must be the same model and wattage.

Before you begin

- You have physically located the controller with the power supply to be replaced.
- If you are replacing only one power supply:
  - You have unpacked the replacement power supply unit and ensured that it is the same model and wattage as the power supply unit you are replacing.
  - You have confirmed that the other power supply is installed and running.
- If you are replacing both power supplies at the same time:
  - You have unpacked the replacement power supply units and ensured they are the same model and wattage.

About this task

The figure shows the two power supply units for the SG100, which are accessible from the back of the appliance.

The power supplies for the SG1000 are identical.

Steps

1. If you are replacing only one power supply, you don't need to shut down the appliance. Go to the Unplug the power cord step. If you are replacing both power supplies at the same time, do the following before unplugging the power cords:
   a. Shut down the appliance.
2. Unplug the power cord from each power supply to be replaced.
3. Lift the cam handle on the first supply to be replaced.

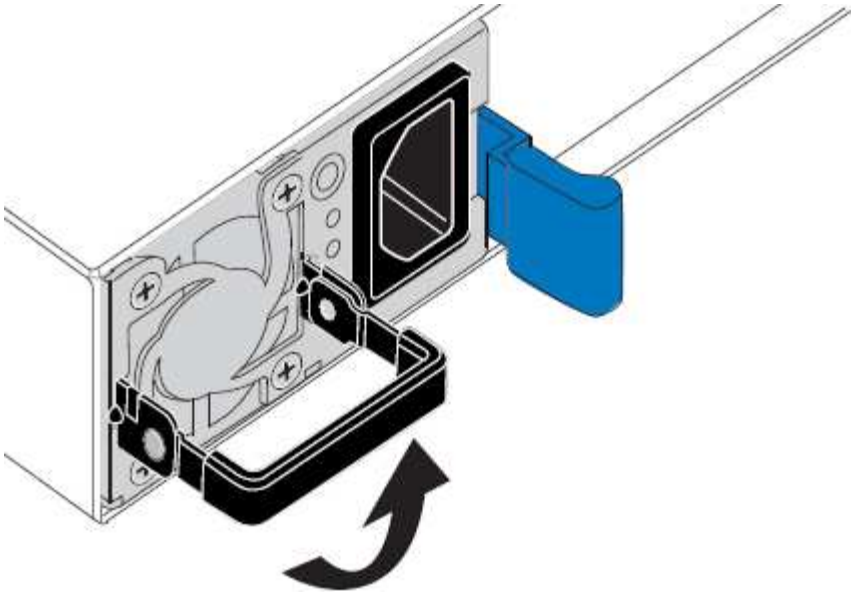

4. Press the blue latch and pull the power supply out.

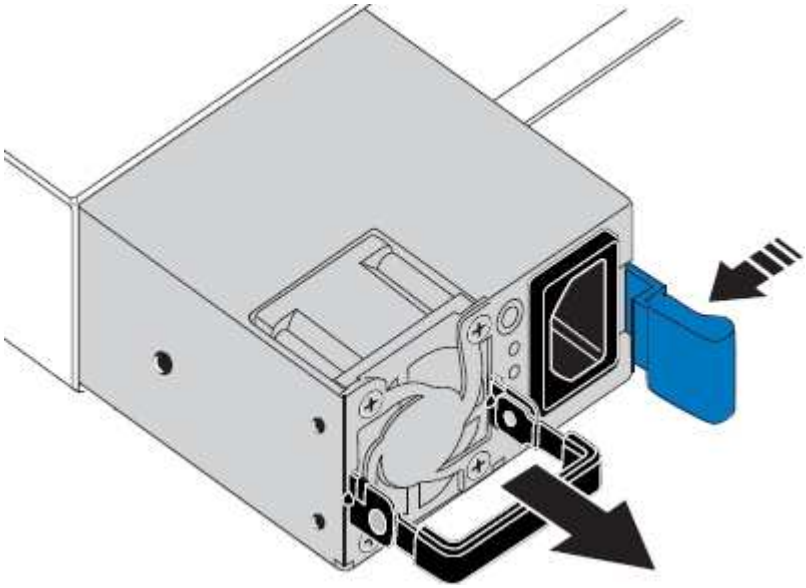

5. With the blue latch on the right, slide the replacement power supply into the chassis.

> Both power supplies must be the same model and wattage.

Ensure that the blue latch is on the right side when you slide the replacement unit in.

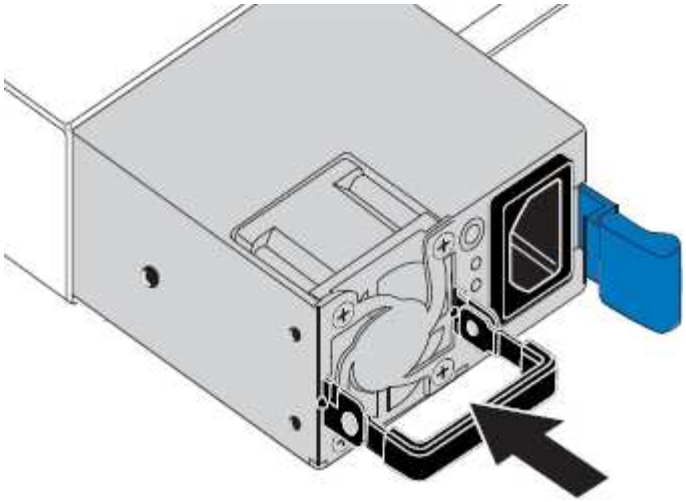

6. Push the cam handle down to secure the replacement power supply.
7. If you are replacing both power supplies, repeat steps 2 though 6 to replace the second power supply.
8. Connect the power cords to the replaced units and apply power.

After replacing the part, return the failed part to NetApp, as described in the RMA instructions shipped with the kit. See the Part Return & Replacements page for further information.

Replace fan in SG100 or SG1000

The services appliance has eight cooling fans. If one of the fans fails, you must replace it as soon as possible to ensure that the appliance has proper cooling.

Before you begin

- You have unpacked the replacement fan.
- You have physically located the appliance.
- You have confirmed that the other fans are installed and running.

About this task

The appliance node will not be accessible while you replace the fan.

The photograph shows a fan for the services appliance. The cooling fans are accessible after you take the top cover off the appliance.

> Each of the two power supply units also contain a fan. Those fans aren't included in this procedure.

Steps

1. Shut down the appliance.
   a. Log in to the grid node:
      i. Enter the following command: `ssh admin@grid_node_IP`
      ii. Enter the password listed in the `Passwords.txt` file.
      iii. Enter the following command to switch to root: `su -`
      iv. Enter the password listed in the `Passwords.txt` file.

      When you are logged in as root, the prompt changes from `$` to `#`.

   b. Shut down the services appliance:
      `shutdown -h now`
2. Use one of two methods to verify that the power for the services appliance is off:
   - The power indicator LED on the front of the appliance is off.
   - The Power Control page of the BMC interface indicates that the appliance is off.
3. Pull the appliance out of the rack.
4. Lift the latch on the top cover and remove the cover from the appliance.
5. Locate the fan that failed.

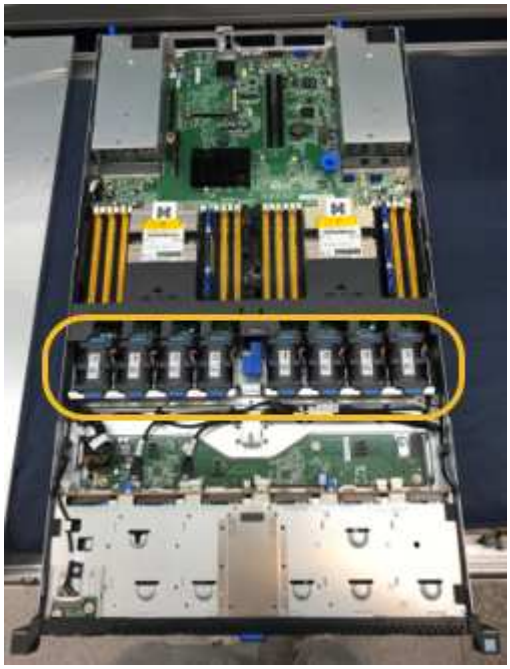

6. Lift the failed fan out of the chassis.

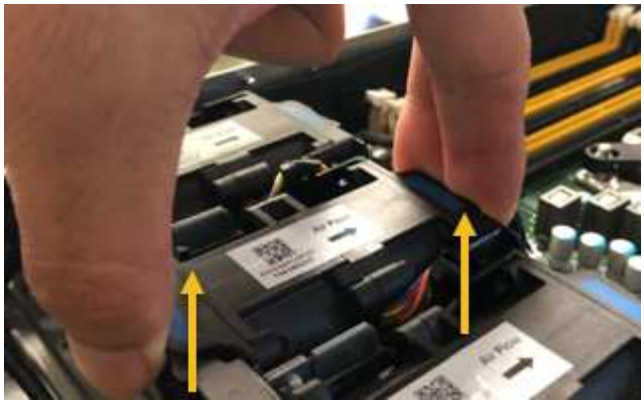

7. Slide the replacement fan into the open slot in the chassis.

   Line up the edge of the fan with the guide pin. The pin is circled in the photograph.

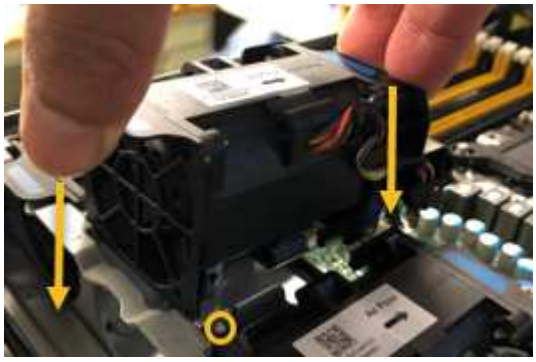

8. Press the fan's connector firmly into the circuit board.

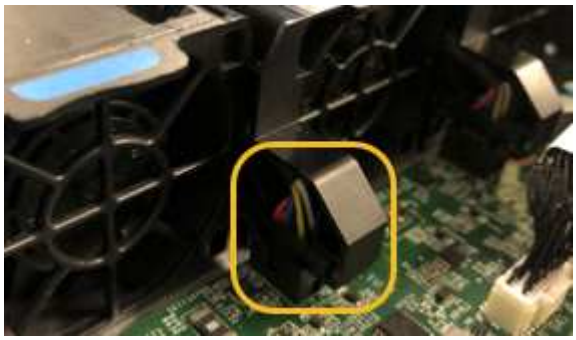

9. Put the top cover back on the appliance, and press the latch down to secure the cover in place.
10. Power on the appliance and monitor the controller LEDs and boot-up codes.

    Use the BMC interface to monitor boot-up status.

11. Confirm that the appliance node appears in the Grid Manager and that no alerts appear.

After replacing the part, return the failed part to NetApp, as described in the RMA instructions shipped with the kit. See the Part Return & Replacements page for further information.

Replace drive in SG100 or SG1000

The SSDs in the services appliance contain the StorageGRID operating system.

Additionally, when the appliance is configured as an Admin Node, the SSDs also contain audit logs, metrics, and database tables. The drives are mirrored using RAID1 for redundancy. If one of the drives fails, you must replace it as soon as possible to ensure redundancy.

Before you begin

- You have physically located the appliance.
- You have verified which drive has failed by noting that its left LED is blinking amber.

  The two SSDs are placed in the slots as shown in the following diagram:

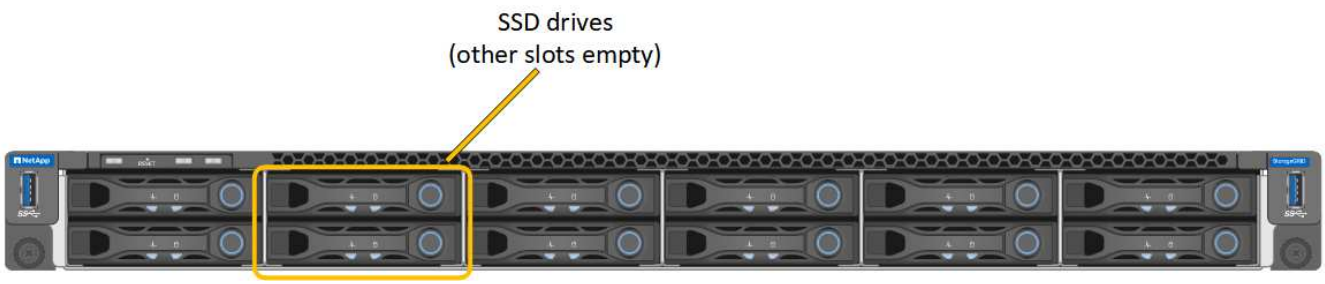

> If you remove the working drive, you will bring down the appliance node. See the information about viewing status indicators to verify the failure.

- You have obtained the replacement drive.
- You have obtained proper ESD protection.

Steps

1. Verify that the drive to be replaced has the left LED blinking amber. If a drive issue was reported in the Grid Manager or BMC UIs, HDD02 or HDD2 refer to the drive in the upper slot, and HDD03 or HDD3 refer to the drive in the lower slot.

   You can also use the Grid Manager to monitor the status of the SSDs. Select **NODES**. Then select `Appliance Node` > **Hardware**. If a drive has failed, the Storage RAID Mode field contains a message about which drive has failed.

2. Wrap the strap end of the ESD wristband around your wrist, and secure the clip end to a metal ground to prevent static discharge.
3. Unpack the replacement drive, and set it on a static-free, level surface near the appliance.

   Save all packing materials.

4. Press the release button on the failed drive.

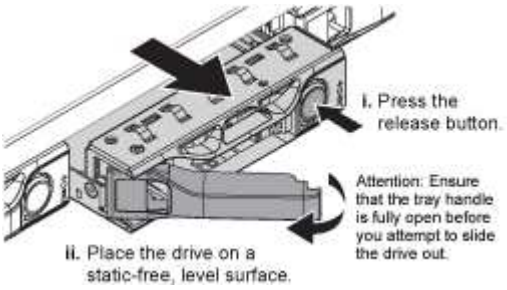

The handle on the drive springs open partially, and the drive releases from the slot.

5. Open the handle, slide the drive out, and place it on a static-free, level surface.
6. Press the release button on the replacement drive before you insert it into the drive slot.

   The latch springs open.

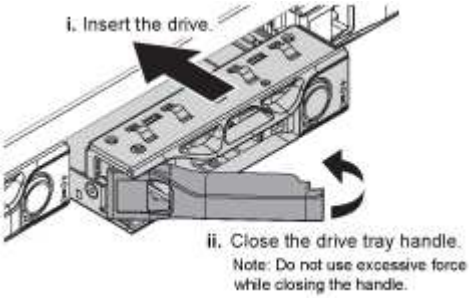

7. Insert the replacement drive in the slot, and then close the drive handle.

   Don't use excessive force while closing the handle.

   When the drive is fully inserted, you hear a click.

   The drive is automatically rebuilt with mirrored data from the working drive. You can check the status of the rebuild by using the Grid Manager. Select **NODES**. Then select `Appliance Node` > **Hardware**. The Storage RAID Mode field contains a "rebuilding" message until the drive is completely rebuilt.

After replacing the part, return the failed part to NetApp, as described in the RMA instructions shipped with the kit. See the Part Return & Replacements page for further information.

Replace an SG100 or SG1000

You might need to replace the appliance if it is not functioning optimally or if it has failed.

Before you begin

- You have a replacement appliance with the same part number as the appliance you are replacing.
- You have labels to identify each cable that is connected to the appliance.
- You have physically located the appliance.

About this task

The StorageGRID node will not be accessible while you replace the appliance. If the appliance is functioning sufficiently, you can perform a controlled shutdown at the start of this procedure.

If you are replacing the appliance before installing StorageGRID software, you might not be able to access the StorageGRID Appliance Installer immediately after completing this procedure. While you can access the StorageGRID Appliance Installer from other hosts on the same subnet as the appliance, you can't access it from hosts on other subnets. This condition should resolve itself within 15 minutes (when any ARP cache entries for the original appliance time out), or you can clear the condition immediately by purging any old ARP cache entries manually from the local router or gateway.

Steps

1. Display the current configurations of the appliance and record them.
   a. Log in to the appliance to be replaced:
      i. Enter the following command: `ssh admin@grid_node_IP`
      ii. Enter the password listed in the `Passwords.txt` file.
      iii. Enter the following command to switch to root: `su -`
      iv. Enter the password listed in the `Passwords.txt` file.

      When you are logged in as root, the prompt changes from `$` to `#`.

   b. Enter: **`run-host-command ipmitool lan print`** to display the current BMC configurations for the appliance.
2. Shut down the appliance: `shutdown -h now`
3. If any of the network interfaces on this StorageGRID appliance are configured for DHCP, you might need to update the permanent DHCP lease assignments on the DHCP servers to reference the MAC addresses of the replacement appliance. The update ensures the appliance is assigned the expected IP addresses. See Update MAC address references.
4. Remove and replace the appliance:
   a. Label the cables and then disconnect the cables and any network transceivers.

      To prevent degraded performance, don't twist, fold, pinch, or step on the cables.

   b. Remove the failed appliance from the cabinet or rack.
   c. Transfer the two power supplies, eight cooling fans, and two SSDs from the failed appliance to the replacement appliance.

      The two SSDs are placed in the slots as shown in the following diagram:

      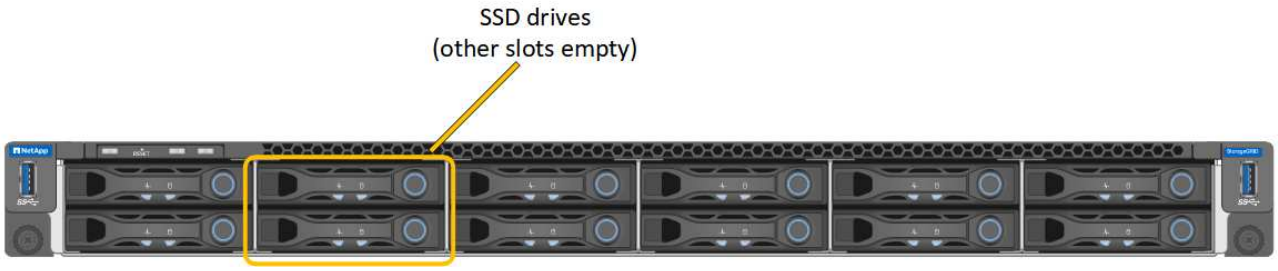

      HDD02 or HDD2 refer to the drive in the upper slot, and HDD03 or HDD3 refer to the drive in the lower slot.

      Follow the instructions provided for replacing these components.

   d. Install the replacement appliance into the cabinet or rack.
   e. Replace the cables and any optical transceivers.
   f. Power on the appliance and wait for it to rejoin the grid.
   g. Confirm that the appliance node appears in the Grid Manager and that no alerts appear.
5. Log in to the replaced appliance:

a. Enter the following command: `ssh admin@grid_node_IP`

b. Enter the password listed in the `Passwords.txt` file.

c. Enter the following command to switch to root: `su -`

d. Enter the password listed in the `Passwords.txt` file.

6. Restore BMC network connectivity for the replaced appliance. There are two options:
   - Use static IP, netmask, and gateway
   - Use DHCP to obtain an IP, netmask, and gateway

   a. To restore the BMC configuration to use a static IP, netmask, and gateway, enter the following commands:

   ```
   run-host-command ipmitool lan set 1 ipsrc static

   run-host-command ipmitool lan set 1 ipaddr Appliance_IP

   run-host-command ipmitool lan set 1 netmask Netmask_IP

   run-host-command ipmitool lan set 1 defgw ipaddr Default_gateway
   ```

   b. To restore the BMC configuration to use DHCP to obtain an IP, netmask, and gateway, enter the following command:

   ```
   run-host-command ipmitool lan set 1 ipsrc dhcp
   ```

7. After restoring BMC network connectivity, connect to the BMC interface to audit and restore any additional custom BMC configuration you might have applied. For example, you should confirm the settings for SNMP trap destinations and email notifications. See Configure BMC interface.

8. Confirm that the appliance node appears in the Grid Manager and that no alerts appear.

After replacing the part, return the failed part to NetApp, as described in the RMA instructions shipped with the kit. See the Part Return & Replacements page for further information.

Related information

View status indicators

View boot-up codes for appliance

Copyright information

Copyright © 2024 NetApp, Inc. All Rights Reserved. Printed in the U.S. No part of this document covered by copyright may be reproduced in any form or by any means—graphic, electronic, or mechanical, including photocopying, recording, taping, or storage in an electronic retrieval system—without prior written permission of the copyright owner.

Software derived from copyrighted NetApp material is subject to the following license and disclaimer:

THIS SOFTWARE IS PROVIDED BY NETAPP “AS IS” AND WITHOUT ANY EXPRESS OR IMPLIED WARRANTIES, INCLUDING, BUT NOT LIMITED TO, THE IMPLIED WARRANTIES OF MERCHANTABILITY AND FITNESS FOR A PARTICULAR PURPOSE, WHICH ARE HEREBY DISCLAIMED. IN NO EVENT SHALL NETAPP BE LIABLE FOR ANY DIRECT, INDIRECT, INCIDENTAL, SPECIAL, EXEMPLARY, OR CONSEQUENTIAL DAMAGES (INCLUDING, BUT NOT LIMITED TO, PROCUREMENT OF SUBSTITUTE GOODS OR SERVICES; LOSS OF USE, DATA, OR PROFITS; OR BUSINESS INTERRUPTION) HOWEVER CAUSED AND ON ANY THEORY OF LIABILITY, WHETHER IN CONTRACT, STRICT LIABILITY, OR TORT (INCLUDING NEGLIGENCE OR OTHERWISE) ARISING IN ANY WAY OUT OF THE USE OF THIS SOFTWARE, EVEN IF ADVISED OF THE POSSIBILITY OF SUCH DAMAGE.

NetApp reserves the right to change any products described herein at any time, and without notice. NetApp assumes no responsibility or liability arising from the use of products described herein, except as expressly agreed to in writing by NetApp. The use or purchase of this product does not convey a license under any patent rights, trademark rights, or any other intellectual property rights of NetApp.

The product described in this manual may be protected by one or more U.S. patents, foreign patents, or pending applications.

LIMITED RIGHTS LEGEND: Use, duplication, or disclosure by the government is subject to restrictions as set forth in subparagraph (b)(3) of the Rights in Technical Data -Noncommercial Items at DFARS 252.227-7013 (FEB 2014) and FAR 52.227-19 (DEC 2007).

Data contained herein pertains to a commercial product and/or commercial service (as defined in FAR 2.101) and is proprietary to NetApp, Inc. All NetApp technical data and computer software provided under this Agreement is commercial in nature and developed solely at private expense. The U.S. Government has a non-exclusive, non-transferrable, nonsublicensable, worldwide, limited irrevocable license to use the Data only in connection with and in support of the U.S. Government contract under which the Data was delivered. Except as provided herein, the Data may not be used, disclosed, reproduced, modified, performed, or displayed without the prior written approval of NetApp, Inc. United States Government license rights for the Department of Defense are limited to those rights identified in DFARS clause 252.227-7015(b) (FEB 2014).

Trademark information

NETAPP, the NETAPP logo, and the marks listed at http://www.netapp.com/TM are trademarks of NetApp, Inc. Other company and product names may be trademarks of their respective owners.