Hardware procedures

StorageGRID Appliances

NetApp
March 14, 2024

This PDF was generated from https://docs.netapp.com/us-en/storagegrid-appliances/sg5700/replacing-e2800-controller.html on March 14, 2024. Always check docs.netapp.com for the latest.

Table of Contents

Hardware procedures . . . 1
Replace E2800 series storage controller in the SG5700 . . . 1
Replace E5700SG compute controller . . . 12
Replace other hardware components in the SG5700 . . . 14

Hardware procedures

Replace E2800 series storage controller in the SG5700

You might need to replace the E2800 series controller if it is not functioning optimally or if it has failed.

Before you begin

- You have a replacement controller with the same part number as the controller you are replacing.

> Don’t rely on the E-Series instructions to replace a controller in the StorageGRID appliance, because the procedures aren’t the same.

- You have labels to identify each cable that is connected to the controller.
- If all drives are secured, you have reviewed the steps in the simplex E2800 series controller replacement procedure, which include downloading and installing E-Series SANtricity System Manager from the NetApp Support Site and then using the Enterprise Management Window (EMW) to unlock the secured drives after you have replaced the controller.

> You will not be able to use the appliance until you unlock the drives with the saved key.

- You must have specific access permissions.
- You must be signed in to the Grid Manager using a supported web browser.

About this task

You can determine if you have a failed controller canister in two ways:

- The Recovery Guru in SANtricity System Manager directs you to replace the controller.
- The amber Attention LED on the controller is on, indicating that the controller has a fault.

The appliance Storage Node will not be accessible when you replace the controller. If the E2800 series controller is functioning sufficiently, you can place the E5700SG controller into maintenance mode.

When you replace a controller, you must remove the battery from the original controller and install it in the replacement controller. In some cases, you might also need to remove the host interface card from the original controller and install it in the replacement controller.

> The storage controllers in most appliance models don’t include host interface cards (HIC).

Step 1: Prepare to remove the controller

These figures show the E2800A controller and the E2800B controller. The procedure for replacing the E2800 series controllers and the EF570 controller is identical.

E2800A storage controller:

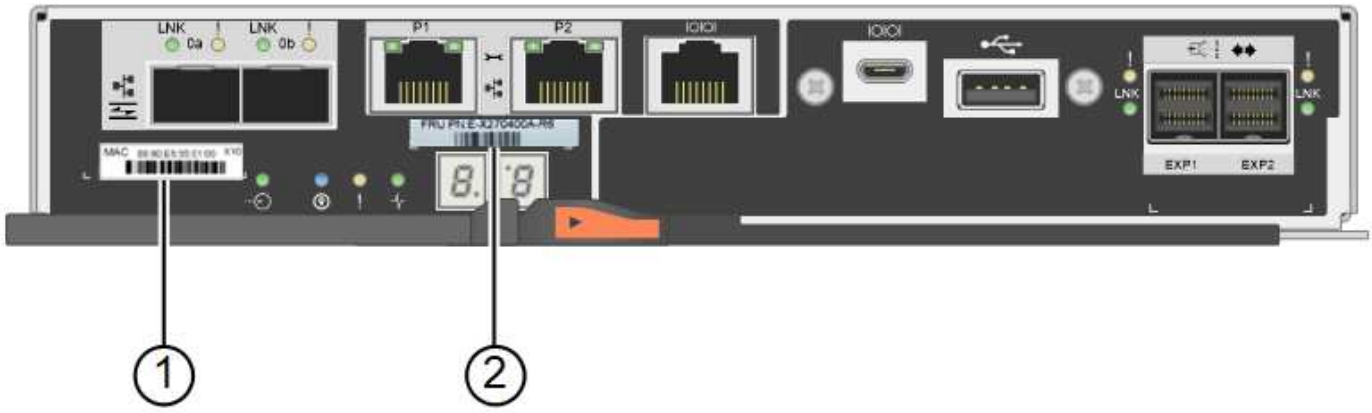

E2800B storage controller:

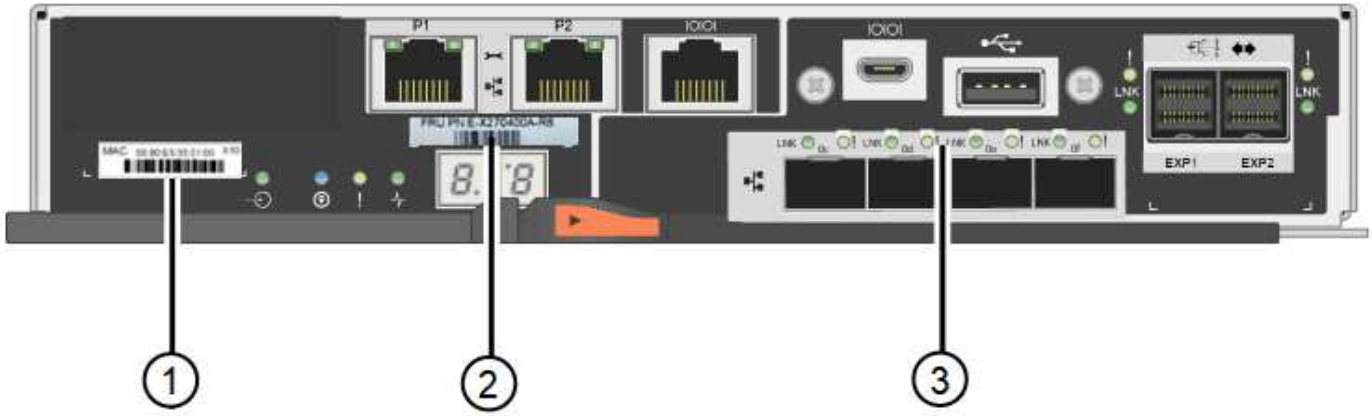

Label	component	Description
1	MAC address	The MAC address for management port 1 (“P1 on the E2800A and 0a on the E2800B”). If you used DHCP to obtain the original controller’s IP address, you will need this address to connect to the new controller.
2	FRU part number	The FRU part number. This number must match the replacement part number for the currently installed controller.
3	4-port HIC	The 4-port host interface card (HIC). This card must be moved to the new controller when you perform the replacement. **Note**: the E2800A controller does not have a HIC.

Follow the instructions in the E2800 controller replacement procedure to prepare to remove the controller.

You use SANtricity System Manager to perform the following steps.

Steps

1. Make a note of which version of SANtricity OS software is currently installed on the controller.
2. Make a note of which version of NVSRAM is currently installed.

3. If the Drive Security feature is enabled, be sure a saved key exists and that you know the pass phrase required to install it.

> **Possible loss of data access —** If all drives in the appliance are security enabled, the new controller will not be able to access the appliance until you unlock the secured drives using the Enterprise Management Window in SANtricity System Manager.

4. Back up the configuration database.

   If a problem occurs when you remove a controller, you can use the saved file to restore your configuration.

5. Collect support data for the appliance.

> Collecting support data before and after replacing a component ensures you can send a full set of logs to technical support if the replacement does not resolve the problem.

Step 2: Take the controller offline

Take the controller offline and confirm that all operations are complete.

Steps

1. If the StorageGRID appliance is running in a StorageGRID system, place the E5700SG controller into maintenance mode.
2. If the E2800 controller is functioning sufficiently to allow for a controlled shutdown, confirm that all operations have completed.
   a. From the home page of SANtricity System Manager, select **View Operations in Progress**.
   b. Confirm that all operations have completed.
3. Power off the controller shelf.

Step 3: Remove the controller

Remove the failed controller from the appliance.

Steps

1. Put on an ESD wristband or take other antistatic precautions.
2. Label the cables and then disconnect the cables and SFPs.

> To prevent degraded performance, don’t twist, fold, pinch, or step on the cables.

3. Release the controller from the appliance by squeezing the latch on the cam handle until it releases, and then open the cam handle to the right.
4. Using two hands and the cam handle, slide the controller out of the appliance.

> Always use two hands to support the weight of the controller.

5. Place the controller on a flat, static-free surface with the removable cover facing up.
6. Remove the cover by pressing down on the button and sliding the cover off.

Step 4: Move battery to the new controller

Remove the battery from the failed controller, and install it into the replacement controller.

Steps

1. Confirm that the green LED inside the controller (between the battery and the DIMMs) is off.

   If this green LED is on, the controller is still using battery power. You must wait for this LED to go off before removing any components.

Item	Description
1	Internal Cache Active LED
2	Battery

2. Locate the blue release latch for the battery.
3. Unlatch the battery by pushing the release latch down and away from the controller.

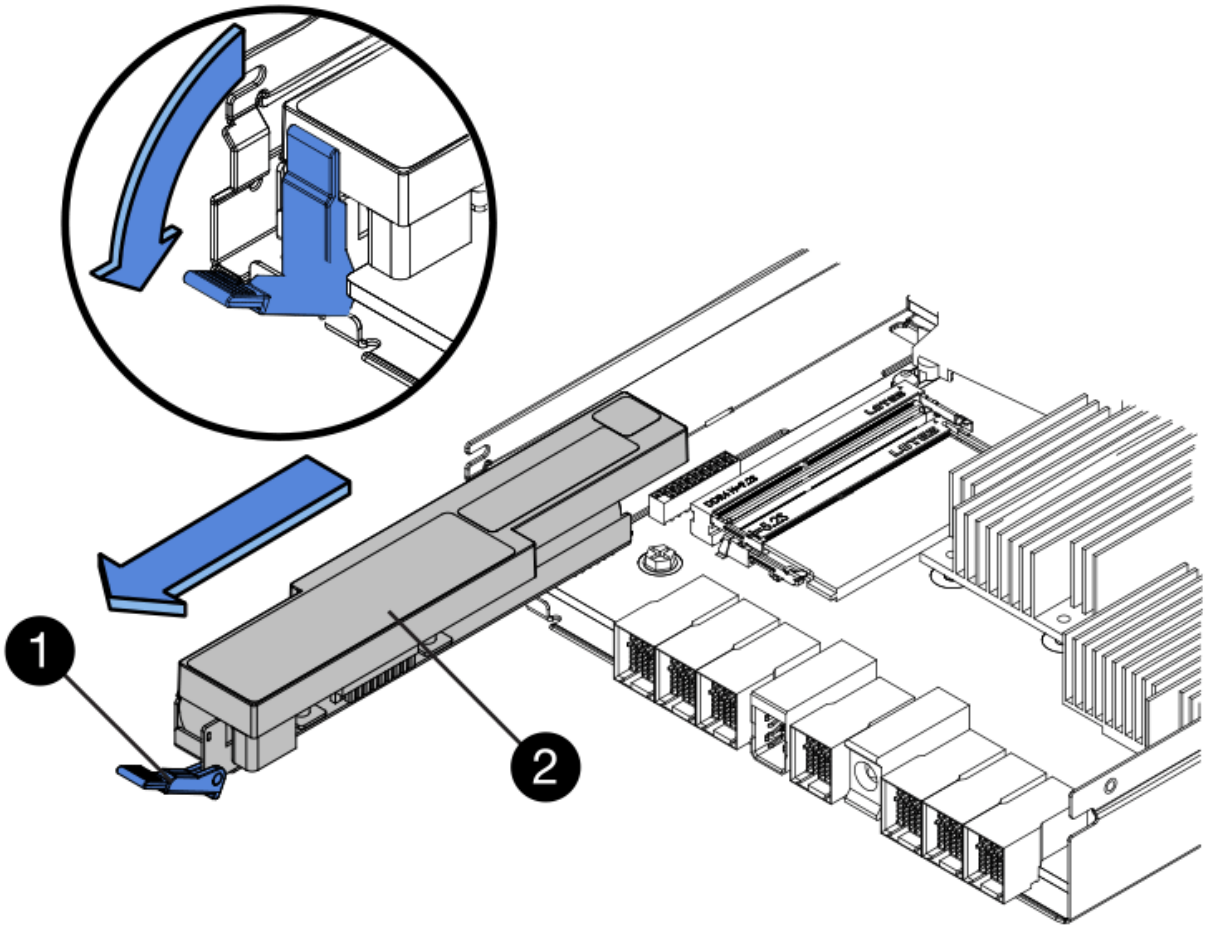

Item	Description
1	Battery release latch
2	Battery

4. Lift up on the battery, and slide it out of the controller.
5. Remove the cover from the replacement controller.
6. Orient the replacement controller so that the slot for the battery faces toward you.
7. Insert the battery into the controller at a slight downward angle.

   You must insert the metal flange at the front of the battery into the slot on the bottom of the controller, and slide the top of the battery beneath the small alignment pin on the left side of the controller.

8. Move the battery latch up to secure the battery.

   When the latch clicks into place, the bottom of the latch hooks into a metal slot on the chassis.

9. Turn the controller over to confirm that the battery is installed correctly.

Possible hardware damage — The metal flange at the front of the battery must be completely inserted into the slot on the controller (as shown in the first figure). If the battery is not installed correctly (as shown in the second figure), the metal flange might contact the controller board, causing damage.

- **Correct — The battery's metal flange is completely inserted into the slot on the controller:**

- **Incorrect — The battery's metal flange is not inserted into the slot on the controller:**

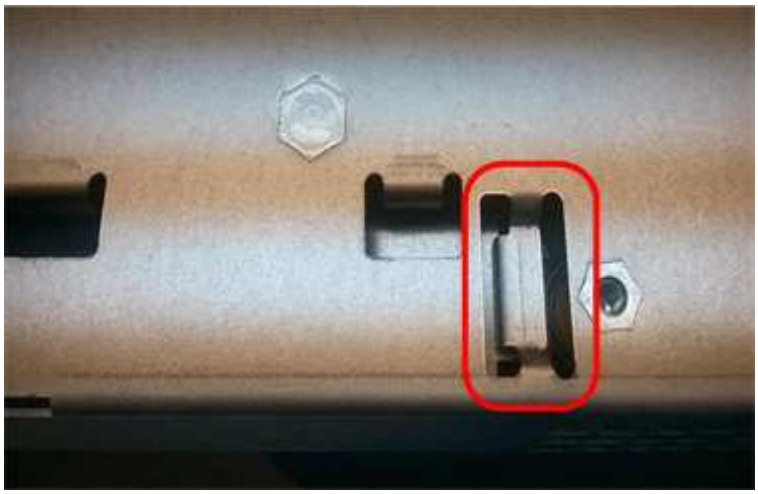

10. Replace the controller cover.

Step 5: Move HIC to new controller, if needed

If the failed controller includes a HIC, move the HIC from the failed controller to the replacement controller.

A separate HIC is used for the E2800B controller only. The HIC is mounted to the main controller board and includes two SPF connectors.

The illustrations in this procedure show a 2-port HIC. The HIC in your controller might have a different number of ports.

E2800A

An E2800A controller does not have a HIC.

Replace the E2800A controller cover, and go to Step 6: Replace controller

E2800B

Move the HIC from the failed E2800B controller to the replacement controller.

Steps

1. Remove any SFPs from the HIC.
2. Using a #1 Phillips screwdriver, remove the screws that attach the HIC faceplate to the controller.

   There are four screws: one on the top, one on the side, and two on the front.

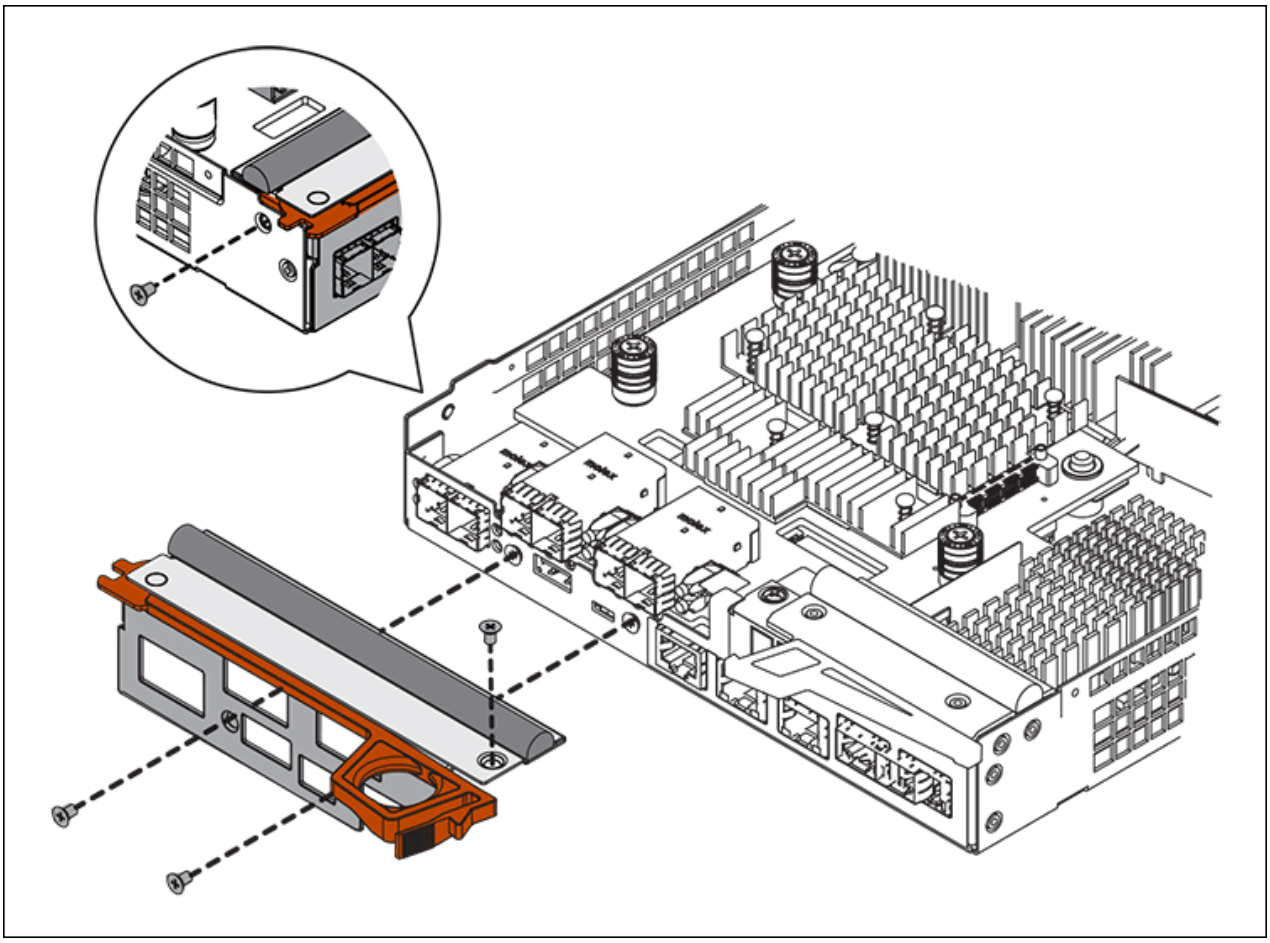

3. Remove the HIC faceplate.
4. Using your fingers or a Phillips screwdriver, loosen the three thumbscrews that secure the HIC to the controller card.
5. Carefully detach the HIC from the controller card by lifting the card up and sliding it back.

   Be careful not to scratch or bump the components on the bottom of the HIC or on the top of the controller card.

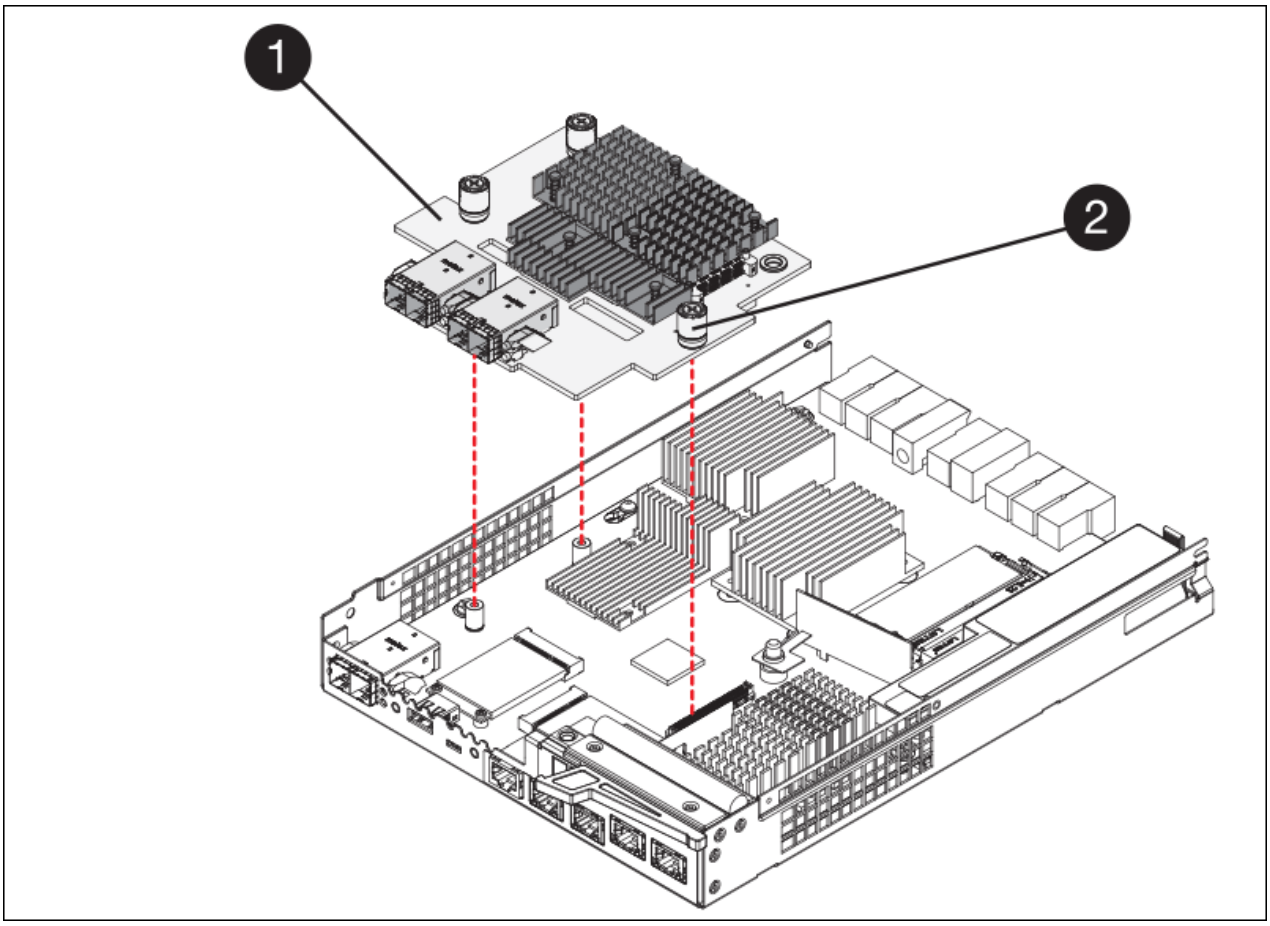

Label	Description
1	Host interface card
2	Thumbscrews

6. Place the HIC on a static-free surface.
7. Using a #1 Phillips screwdriver, remove the four screws that attach the blank faceplate to the replacement controller, and remove the faceplate.
8. Align the three thumbscrews on the HIC with the corresponding holes on the replacement controller, and align the connector on the bottom of the HIC with the HIC interface connector on the controller card.

   Be careful not to scratch or bump the components on the bottom of the HIC or on the top of the controller card.

9. Carefully lower the HIC into place, and seat the HIC connector by pressing gently on the HIC.

   Possible equipment damage — Be careful not to pinch the gold ribbon connector for the controller LEDs between the HIC and the thumbscrews.

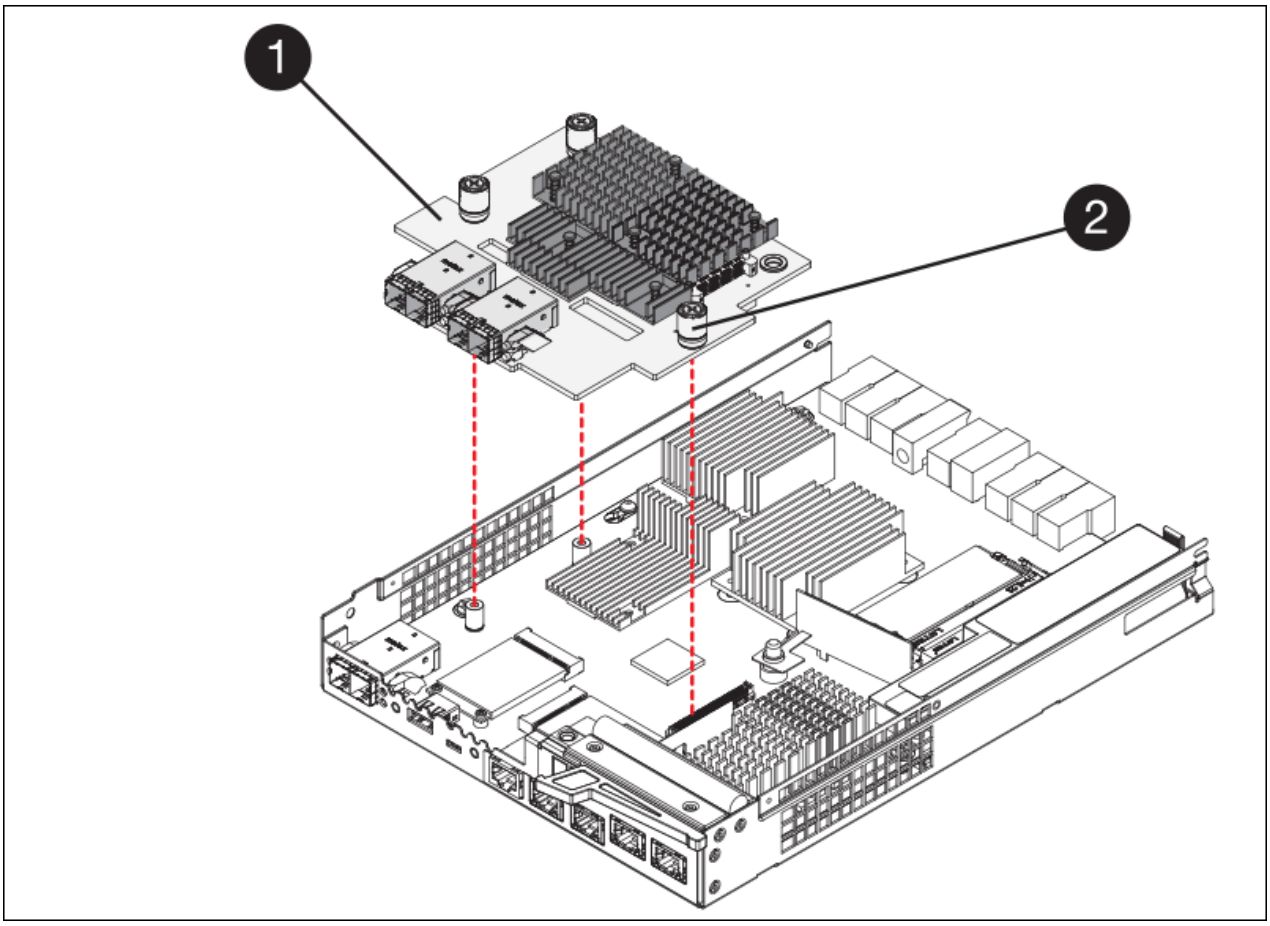

Label	Description
1	Host interface card
2	Thumbscrews

10. Hand-tighten the HIC thumbscrews.

    Don’t use a screwdriver, or you might over tighten the screws.

11. Using a #1 Phillips screwdriver, attach the HIC faceplate you removed from the original controller to the new controller with four screws.

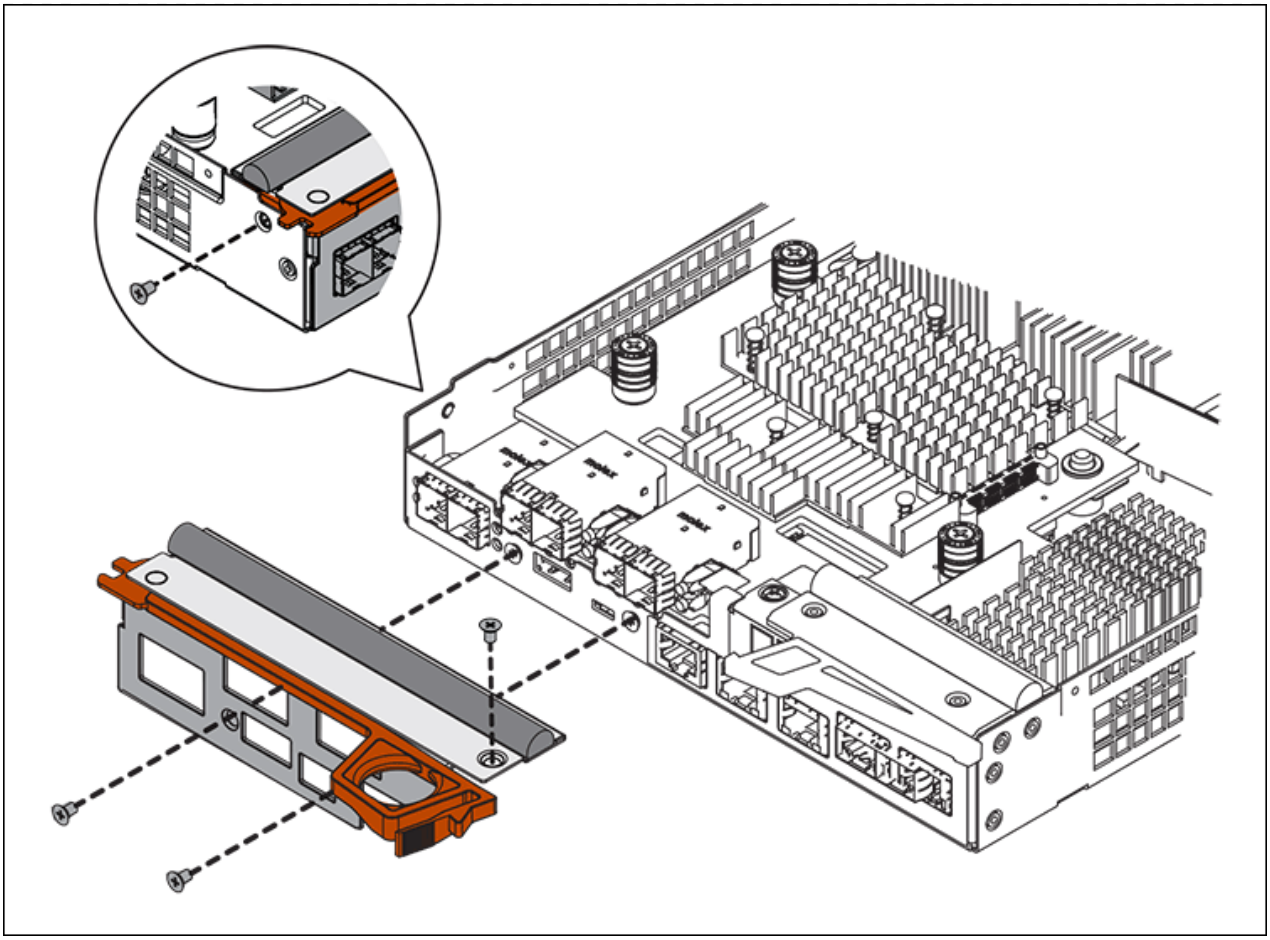

12. Reinstall any removed SFPs into the HIC.

Step 6: Replace controller

Install the replacement controller and verify that it has rejoined the grid.

Steps

1. Install the replacement controller into the appliance.
   a. Turn the controller over, so that the removable cover faces down.
   b. With the cam handle in the open position, slide the controller all the way into the appliance.
   c. Move the cam handle to the left to lock the controller in place.
   d. Replace the cables and SFPs.
   e. Power on the controller shelf.
   f. Wait for the E2800 controller to reboot. Verify that the seven-segment display shows a state of `99`.
   g. Determine how you will assign an IP address to the replacement controller.

> The steps for assigning an IP address to the replacement controller depend on whether you connected management port 1 to a network with a DHCP server and on whether all drives are secured.

If management port 1 is connected to a network with a DHCP server, the new controller will obtain its

IP address from the DHCP server. This value might be different than the original controller's IP address.

2. If the appliance uses secured drives, follow the instructions in the E2800 controller replacement procedure to import the drive security key.
3. Return the appliance to normal operating mode. From the StorageGRID Appliance Installer, select **Advanced** > **Reboot Controller**, and then select **Reboot into StorageGRID**.

4. During the reboot, monitor the node's status to determine when it has rejoined the grid.

   The appliance reboots and rejoins the grid. This process can take up to 20 minutes.

5. Confirm that the reboot is complete and that the node has rejoined the grid. In the Grid Manager, verify that the Nodes page displays a normal status (green check mark icon to the left of the node name) for the appliance node, indicating that no alerts are active and the node is connected to the grid.

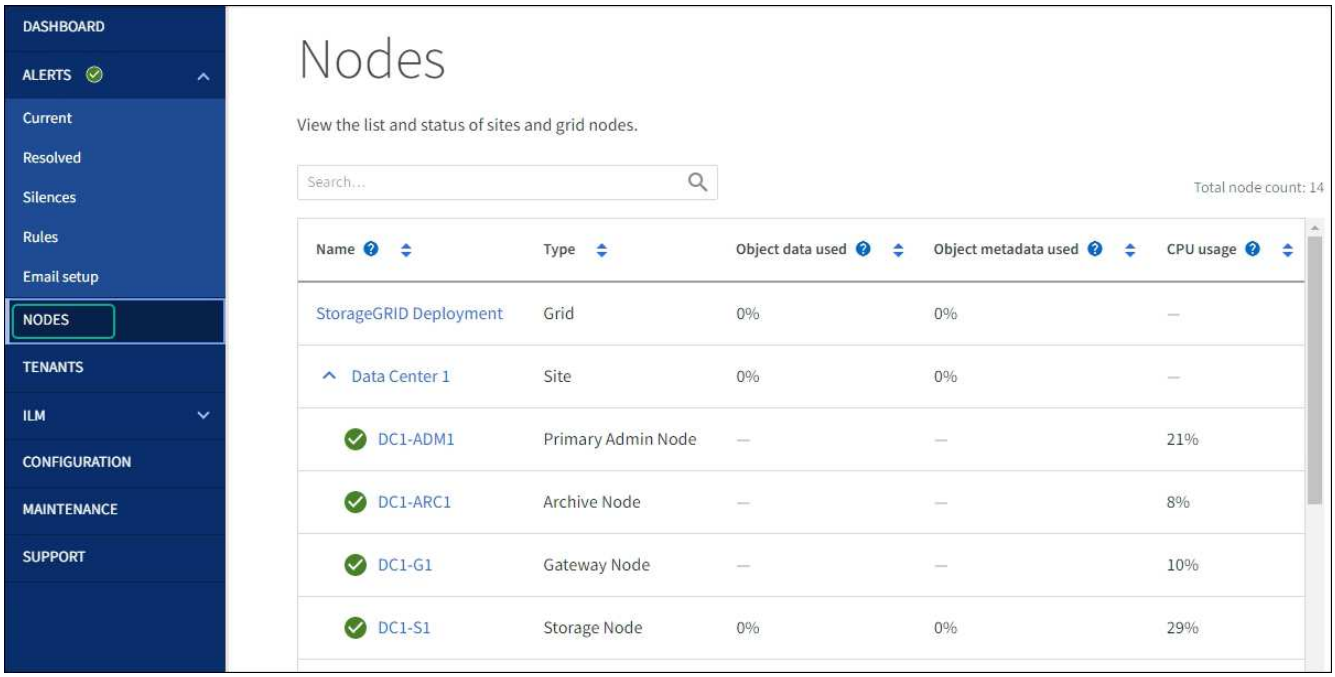

6. From SANtricity System Manager, confirm that the new controller is Optimal, and collect support data.

After replacing the part, return the failed part to NetApp, as described in the RMA instructions shipped with the kit. See the Part Return & Replacements page for further information.

Replace E5700SG compute controller

You might need to replace the E5700SG controller if it is not functioning optimally or if it has failed.

Before you begin

- You have a replacement controller with the same part number as the controller you are replacing.
- You have downloaded the E-Series instructions for replacing a failed E5700 controller.

> Use the E-Series instructions for reference only if you need more details to perform a specific step. Don't rely on the E-Series instructions to replace a controller in the StorageGRID appliance, because the procedures aren't the same. For example, the E-Series instructions for the E5700 controller describe how to remove the battery and the host interface card (HIC) from a failed controller and install them in a replacement controller. These steps don't apply to the E5700SG controller.

- You have labels to identify each cable that is connected to the controller.

About this task

The appliance Storage Node will not be accessible when you replace the controller. If the E5700SG controller is functioning sufficiently, you can perform a controlled shutdown at the start of this procedure.

> If you are replacing the controller before installing StorageGRID software, you might not be able to access the StorageGRID Appliance Installer immediately after completing this procedure. While you can access the StorageGRID Appliance Installer from other hosts on the same subnet as the appliance, you can't access it from hosts on other subnets. This condition should resolve itself within 15 minutes (when any ARP cache entries for the original controller time out), or you can clear the condition immediately by purging any old ARP cache entries manually from the local router or gateway.

Steps

1. Shut down the E5700SG controller.
   a. Log in to the grid node:
      i. Enter the following command: `ssh admin@grid_node_IP`
      ii. Enter the password listed in the `Passwords.txt` file.
      iii. Enter the following command to switch to root: `su -`
      iv. Enter the password listed in the `Passwords.txt` file.

      When you are logged in as root, the prompt changes from `$` to `#`.

   b. Shut down the E5700SG controller:
      `shutdown -h now`
   c. Wait for any data in cache memory to be written to the drives.

      The green Cache Active LED on the back of the E2800 controller is on when cached data needs to be

written to the drives. You must wait for this LED to turn off.

2. Turn off the power.
   a. From the home page of SANtricity System Manager, select **View Operations in Progress**.
   b. Confirm that all operations have completed.
   c. Turn off both power switches on the appliance.
   d. Wait for all LEDs to turn off.
3. If the StorageGRID networks attached to the controller use DHCP servers:
   a. Note the MAC addresses for the ports on the replacement controller (located on labels on the controller).
   b. Ask your network administrator to update the IP address settings for the original controller to reflect the MAC addresses for the replacement controller.

   > You must ensure that the IP addresses for the original controller have been updated before you apply power to the replacement controller. Otherwise, the controller will obtain new DHCP IP addresses when it boots up and might not be able to reconnect to StorageGRID. This step applies to all StorageGRID networks that are attached to the controller.

4. Remove the controller from the appliance:
   a. Put on an ESD wristband or take other antistatic precautions.
   b. Label the cables and then disconnect the cables and SFPs.

   > To prevent degraded performance, don’t twist, fold, pinch, or step on the cables.

   c. Release the controller from the appliance by squeezing the latch on the cam handle until it releases, and then open the cam handle to the right.
   d. Using two hands and the cam handle, slide the controller out of the appliance.

   > Always use two hands to support the weight of the controller.

5. Install the replacement controller into the appliance.
   a. Turn the controller over, so that the removable cover faces down.
   b. With the cam handle in the open position, slide the controller all the way into the appliance.
   c. Move the cam handle to the left to lock the controller in place.
   d. Replace the cables and SFPs.
6. Power on the appliance, and monitor the controller LEDs and seven-segment displays.

   After the controllers have successfully booted up, the seven-segment displays should show the following:

   - E2800 series controller:

     The final state is `99`.

   - E5700SG controller:

The final state is `HA`.

7. Confirm that the appliance Storage Node appears in the Grid Manager and that no alarms appear.

After replacing the part, return the failed part to NetApp, as described in the RMA instructions shipped with the kit. See the Part Return & Replacements page for further information.

Related information

NetApp E-Series Systems Documentation Site

Replace other hardware components in the SG5700

You might need to replace a controller battery, drive, fan, or power supply, in the StorageGRID appliance.

Before you begin

- You have the E-Series hardware replacement procedure.
- The appliance has been placed into maintenance mode if the component replacement procedure requires that you shut down the appliance.

About this task

To replace the battery in the E2800 controller, see the instructions in these instructions for replacing the E2800 controller. Those instructions describe how to remove the controller from the appliance, remove the battery from the controller, install the battery, and replace the controller.

To replace a drive, power-fan canister, fan canister, power canister, or drive drawer in the appliance, access the E-Series procedures for maintaining E2800 hardware.

SG5712 component replacement instructions

FRU	See E-Series instructions for
Drive	Replacing a drive in E2800 12-drive or 24-drive shelves
Power-fan canister	Replacing a power-fan canister in E2800 shelves

SG5760 component replacement instructions

FRU	See E-Series instructions for
Drive	Replacing a drive in E2860 shelves
Power canister	Replacing a power canister in E2860 shelves
Fan canister	Replacing a fan canister in E2860 shelves
Drive drawer	Replacing a drive drawer in E2860 shelves

Copyright information

Copyright © 2024 NetApp, Inc. All Rights Reserved. Printed in the U.S. No part of this document covered by copyright may be reproduced in any form or by any means—graphic, electronic, or mechanical, including photocopying, recording, taping, or storage in an electronic retrieval system—without prior written permission of the copyright owner.

Software derived from copyrighted NetApp material is subject to the following license and disclaimer:

THIS SOFTWARE IS PROVIDED BY NETAPP “AS IS” AND WITHOUT ANY EXPRESS OR IMPLIED WARRANTIES, INCLUDING, BUT NOT LIMITED TO, THE IMPLIED WARRANTIES OF MERCHANTABILITY AND FITNESS FOR A PARTICULAR PURPOSE, WHICH ARE HEREBY DISCLAIMED. IN NO EVENT SHALL NETAPP BE LIABLE FOR ANY DIRECT, INDIRECT, INCIDENTAL, SPECIAL, EXEMPLARY, OR CONSEQUENTIAL DAMAGES (INCLUDING, BUT NOT LIMITED TO, PROCUREMENT OF SUBSTITUTE GOODS OR SERVICES; LOSS OF USE, DATA, OR PROFITS; OR BUSINESS INTERRUPTION) HOWEVER CAUSED AND ON ANY THEORY OF LIABILITY, WHETHER IN CONTRACT, STRICT LIABILITY, OR TORT (INCLUDING NEGLIGENCE OR OTHERWISE) ARISING IN ANY WAY OUT OF THE USE OF THIS SOFTWARE, EVEN IF ADVISED OF THE POSSIBILITY OF SUCH DAMAGE.

NetApp reserves the right to change any products described herein at any time, and without notice. NetApp assumes no responsibility or liability arising from the use of products described herein, except as expressly agreed to in writing by NetApp. The use or purchase of this product does not convey a license under any patent rights, trademark rights, or any other intellectual property rights of NetApp.

The product described in this manual may be protected by one or more U.S. patents, foreign patents, or pending applications.

LIMITED RIGHTS LEGEND: Use, duplication, or disclosure by the government is subject to restrictions as set forth in subparagraph (b)(3) of the Rights in Technical Data -Noncommercial Items at DFARS 252.227-7013 (FEB 2014) and FAR 52.227-19 (DEC 2007).

Data contained herein pertains to a commercial product and/or commercial service (as defined in FAR 2.101) and is proprietary to NetApp, Inc. All NetApp technical data and computer software provided under this Agreement is commercial in nature and developed solely at private expense. The U.S. Government has a non-exclusive, non-transferrable, nonsublicensable, worldwide, limited irrevocable license to use the Data only in connection with and in support of the U.S. Government contract under which the Data was delivered. Except as provided herein, the Data may not be used, disclosed, reproduced, modified, performed, or displayed without the prior written approval of NetApp, Inc. United States Government license rights for the Department of Defense are limited to those rights identified in DFARS clause 252.227-7015(b) (FEB 2014).

Trademark information

NETAPP, the NETAPP logo, and the marks listed at http://www.netapp.com/TM are trademarks of NetApp, Inc. Other company and product names may be trademarks of their respective owners.