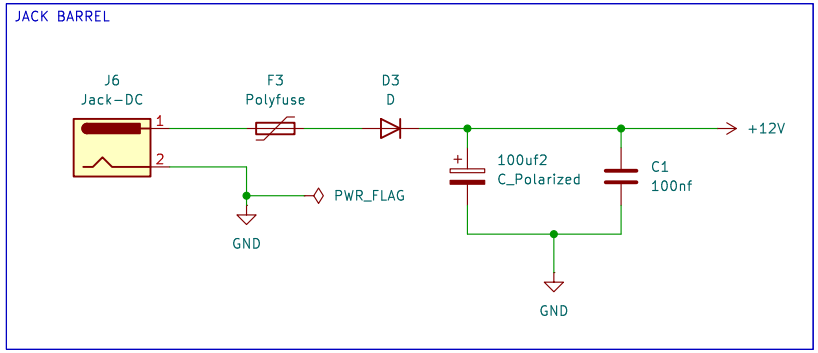

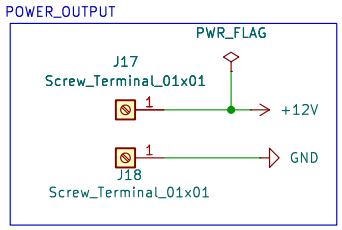

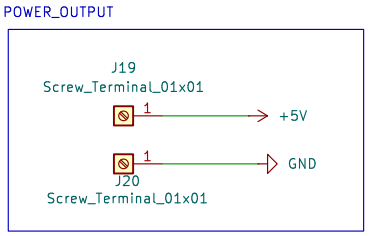

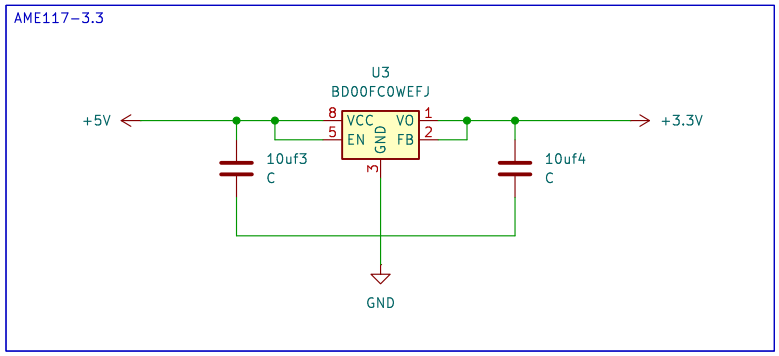

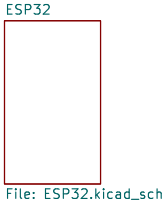

Sheet: /
File: Meter_End_Unit.kicad_sch

Title:

Size: A4	Date:	Rev:
KiCad E.D.A. 9.0.0		Id: 1/4

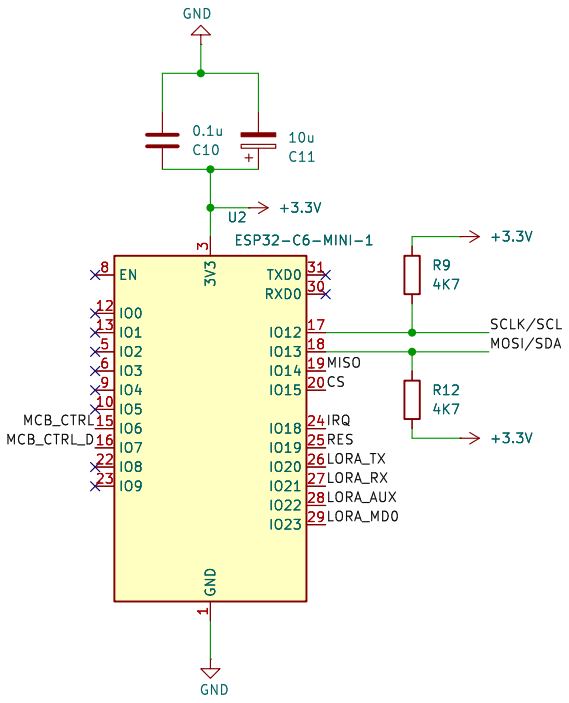

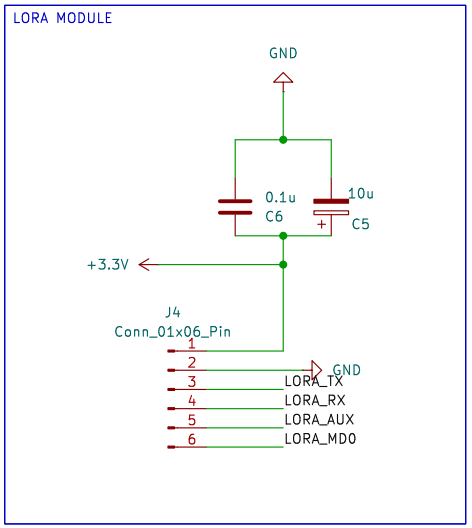

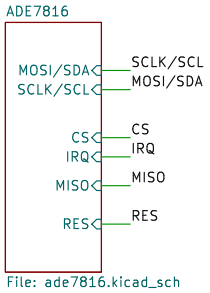

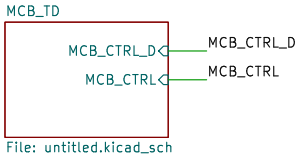

Sheet: /ESP32/
File: ESP32.kicad_sch

Title:

Size: A4	Date:	**Rev:**
KiCad E.D.A. 9.0.0		Id: 2/4

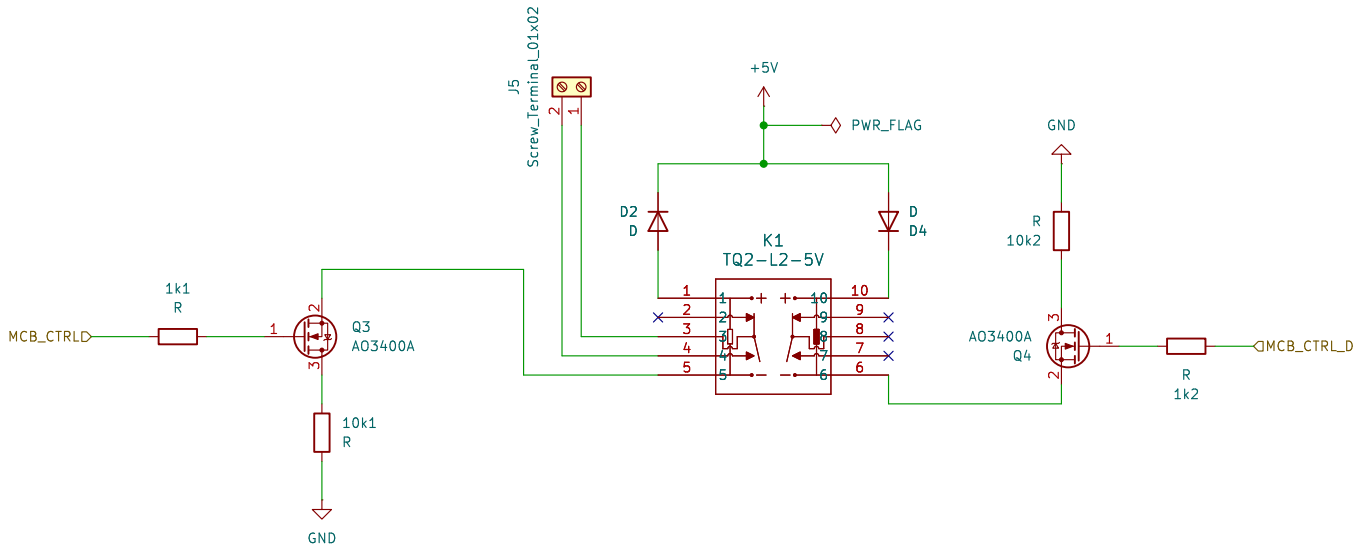

Sheet: /ESP32/MCB_TD/
File: untitled.kicad_sch

Title:

Size: A4	Date:	**Rev:**
KiCad E.D.A. 9.0.0		Id: 3/4

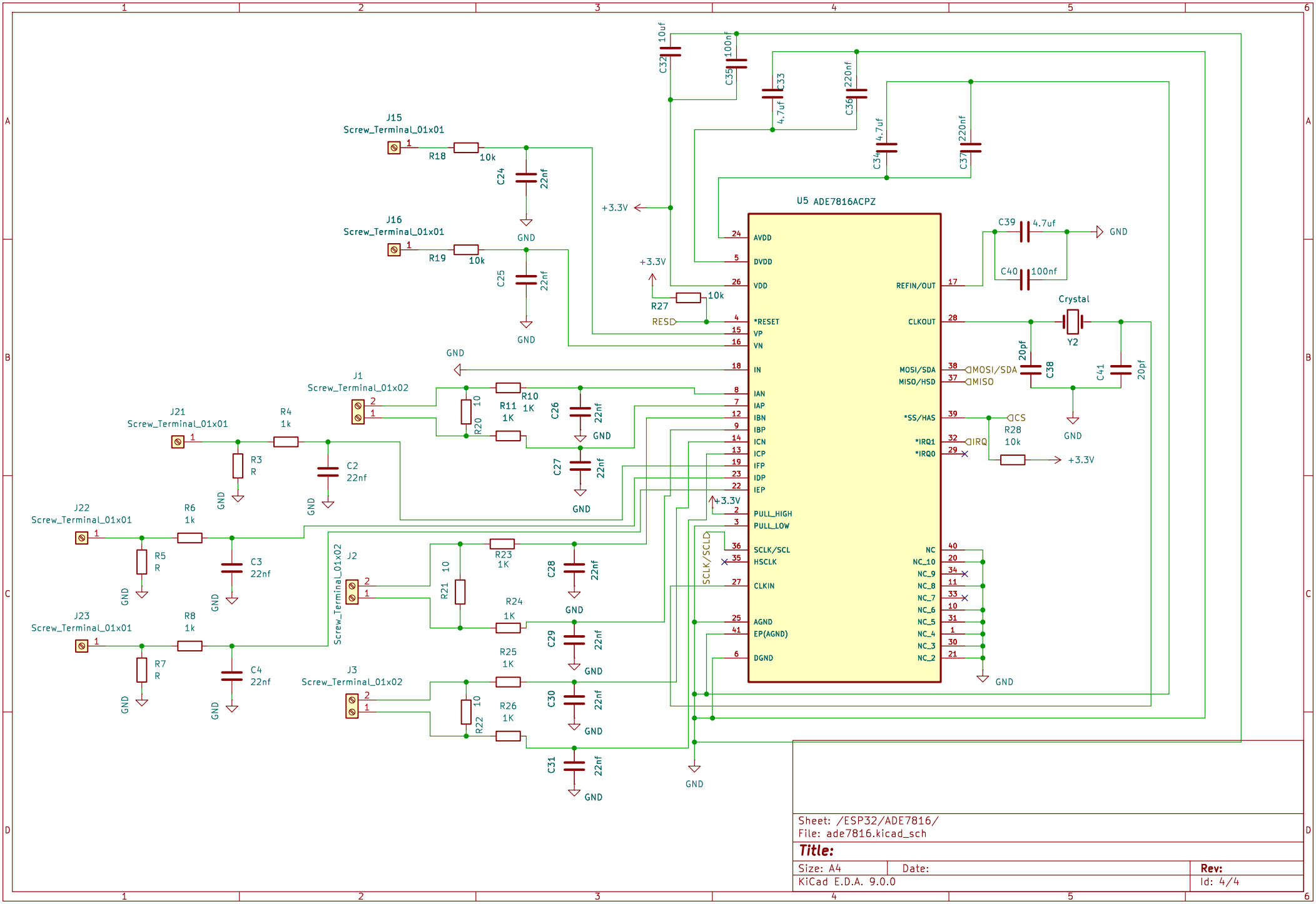
U5 ADE7816ACPZ
AVDD
DVDD
VDD
*RESET
VP
VN
IN
IAN
IAP
IBN
IBP
ICN
ICP
IFP
IDP
IEP
PULL_HIGH
PULL_LOW
SCLK/SCL
HSCLK
CLKIN
AGND
EP(AGND)
DGND
REFIN/OUT
CLKOUT
MOSI/SDA
MISO/HSD
*SS/HAS
*IRQ1
*IRQ0
NC
NC_10
NC_9
NC_8
NC_7
NC_6
NC_5
NC_4
NC_3
NC_2
J15
Screw_Terminal_01x01
J16
Screw_Terminal_01x01
J1
Screw_Terminal_01x02
J2
Screw_Terminal_01x02
J3
Screw_Terminal_01x02
J21
Screw_Terminal_01x01
J22
Screw_Terminal_01x01
J23
Screw_Terminal_01x01
Crystal
Y2
+3.3V
GND
RESD
MOSI/SDA
MISO
CS
IRQ
SCLK/SCLD
Sheet: /ESP32/ADE7816/
File: ade7816.kicad_sch
Title:
Size: A4
Date:
Rev:
KiCad E.D.A. 9.0.0
Id: 4/4