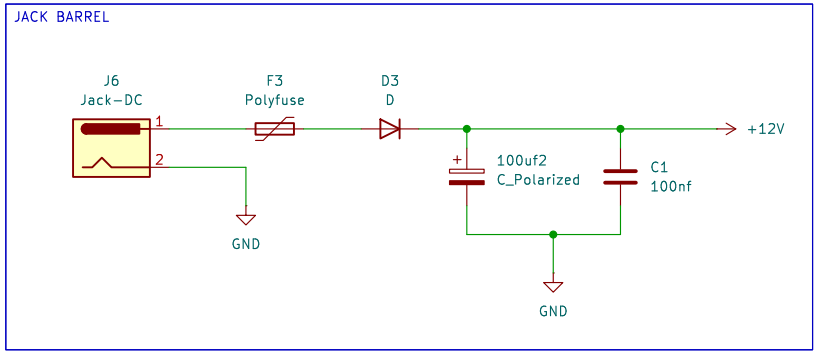

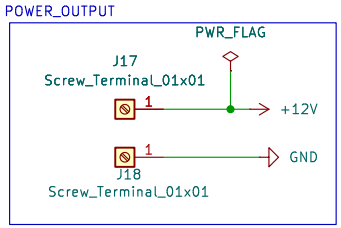

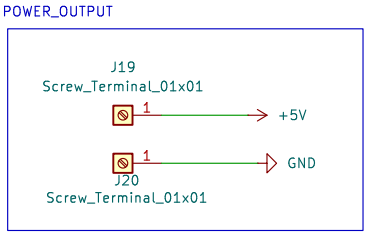

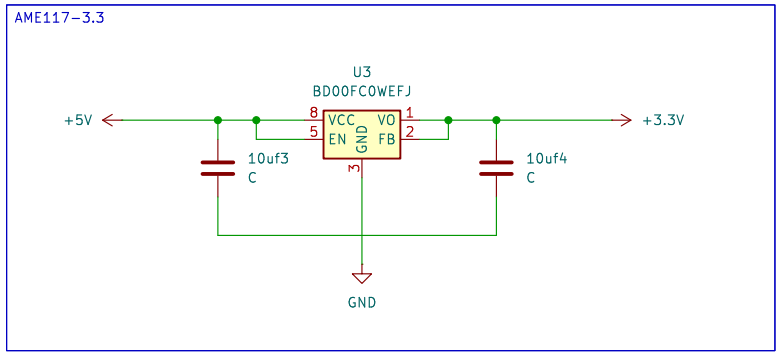

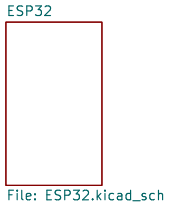

Sheet: /
File: Pole_End_Unit.kicad_sch

Title:

Size: A4	Date:	Rev:
KiCad E.D.A. 9.0.0		Id: 1/3

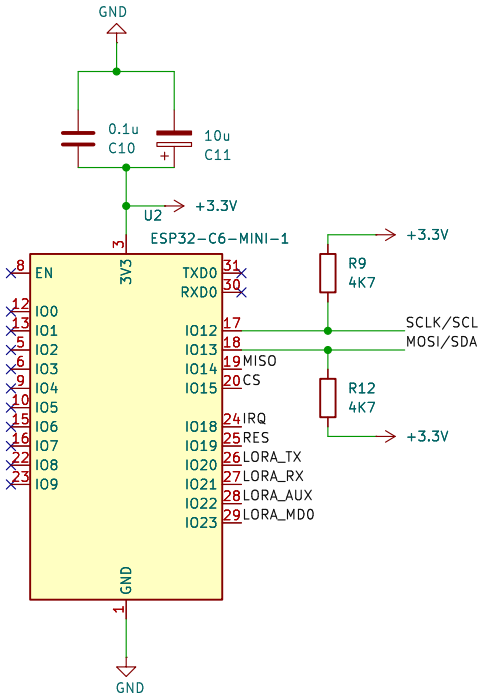

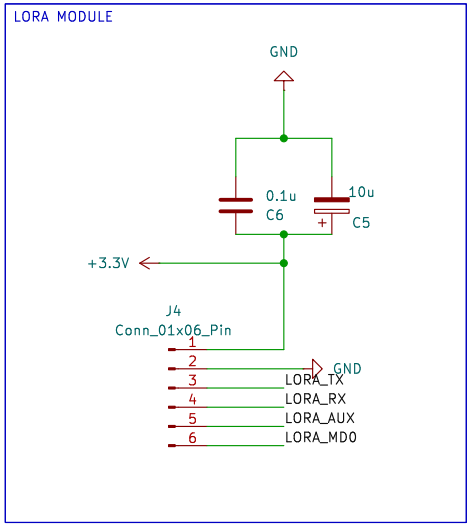

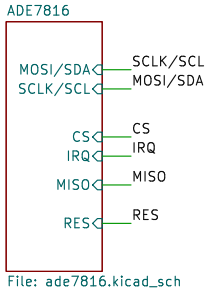

Sheet: /ESP32/
File: ESP32.kicad_sch

Title:

Size: A4	Date:	**Rev:**
KiCad E.D.A. 9.0.0		Id: 2/3

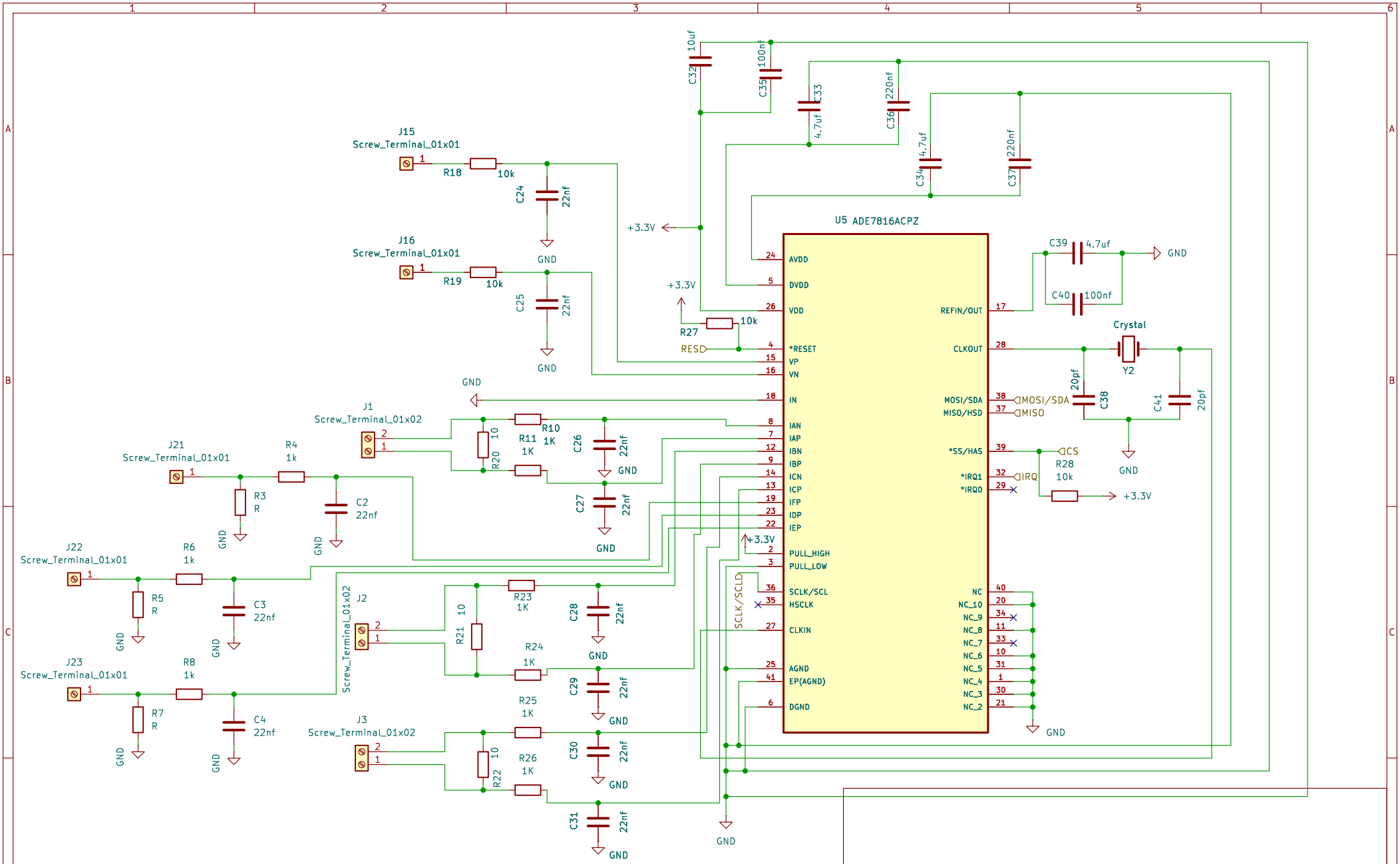

Sheet: /ESP32/ADE7816/
File: ade7816.kicad_sch

Title:

Size: A4	Date:	Rev:
KiCad E.D.A. 9.0.0		Id: 3/3