RevNo	Revision note	Date	Signature	Checked

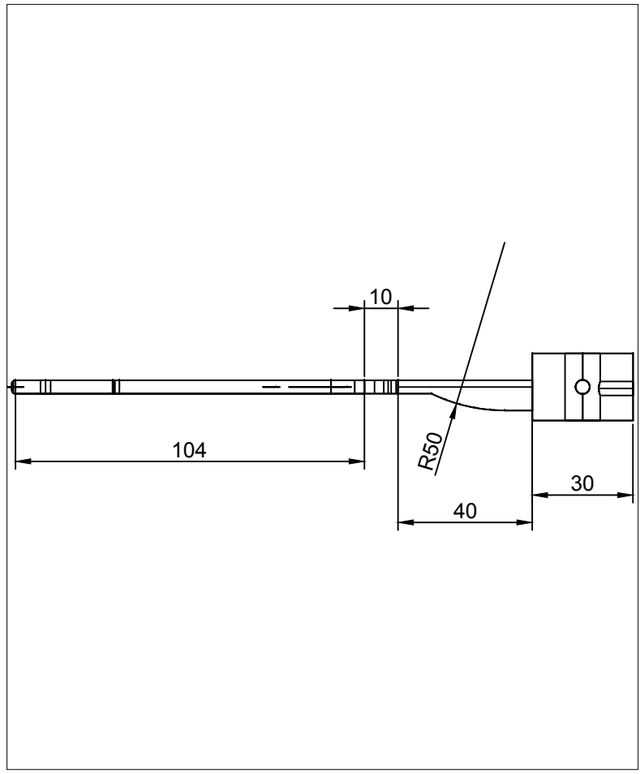

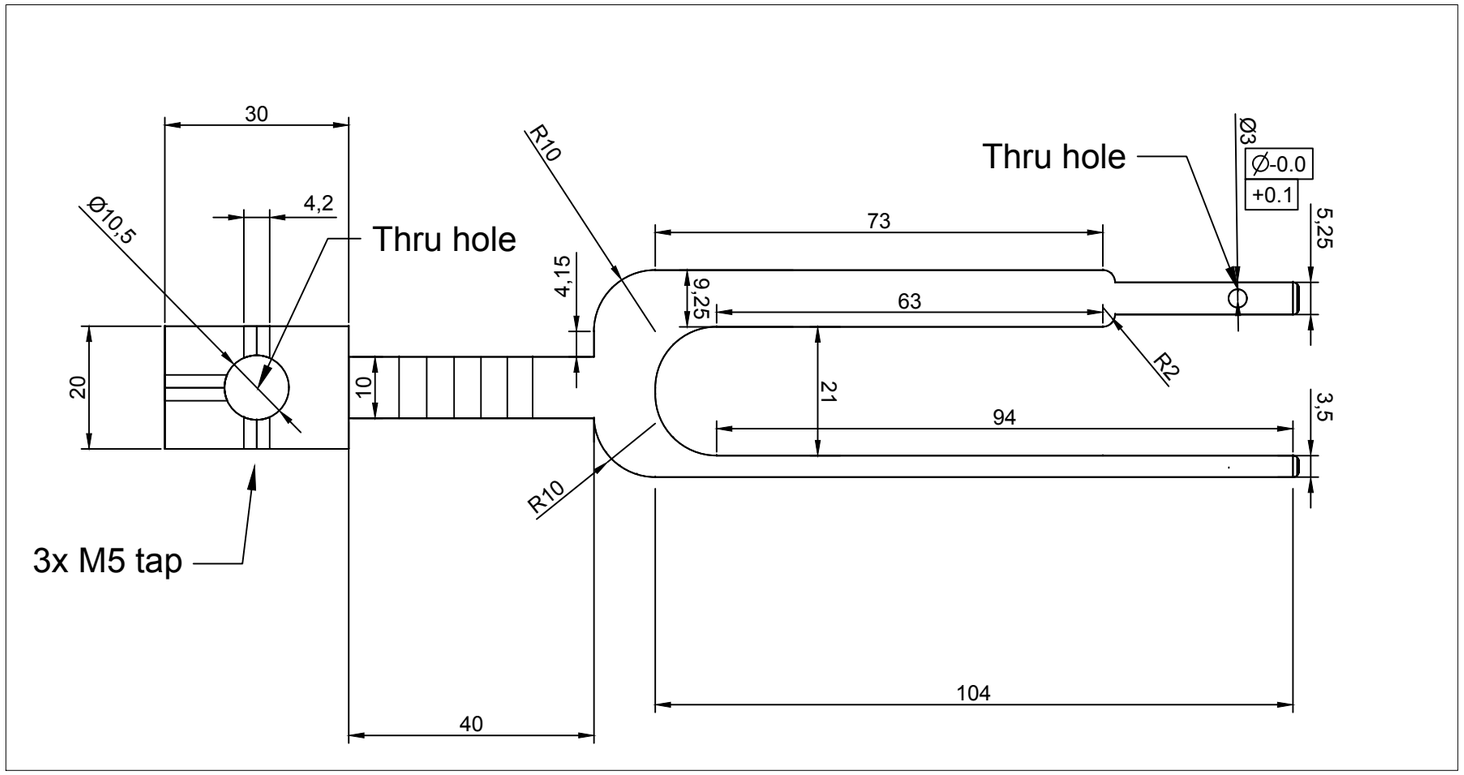

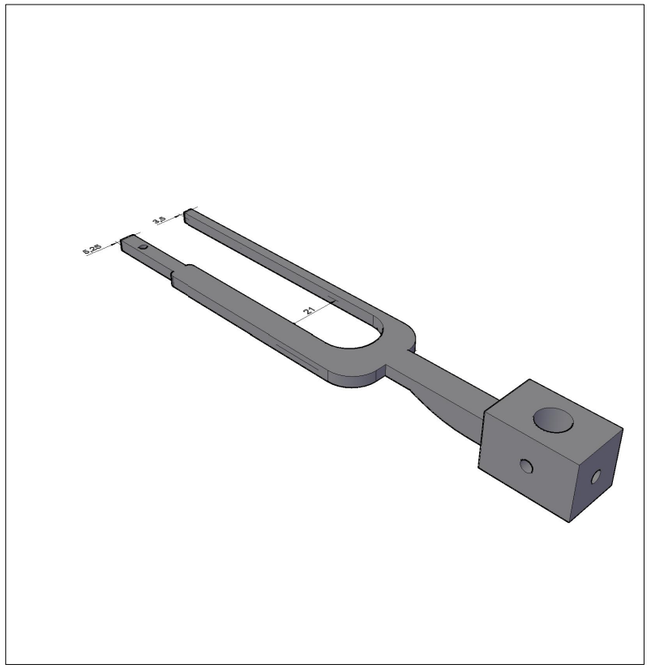

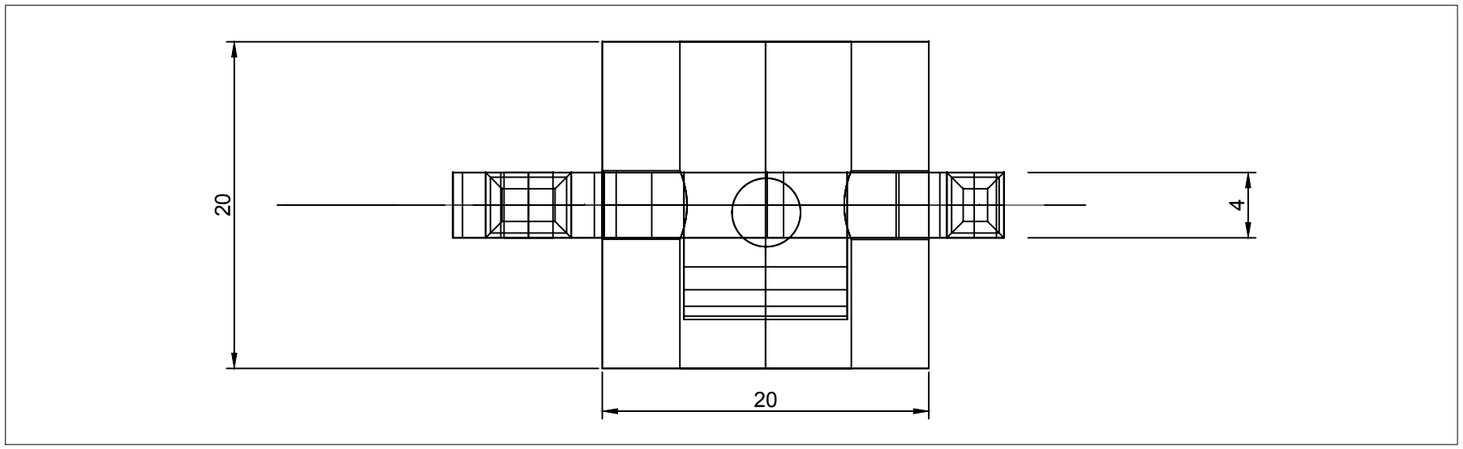

NOTES
Material must be stainless steel, 316 or 304
Remove all sharp edges; deburr thoroughly
Tol 0.1

FILE NAME SFP-Syringe-Holder-v2.dwg	FSCM NO	SHEET 1	SCALE DO NOT SCALE
SIZE A3 ISO		SFP Holder v2	
DRAWN 2/20/2018		####	
CHECK J. Miller		CTASU - Oxford	
APPR.			
ISSUED J. Miller		DWG NO #### - ####	
REV 3			
CONTRACT NO			