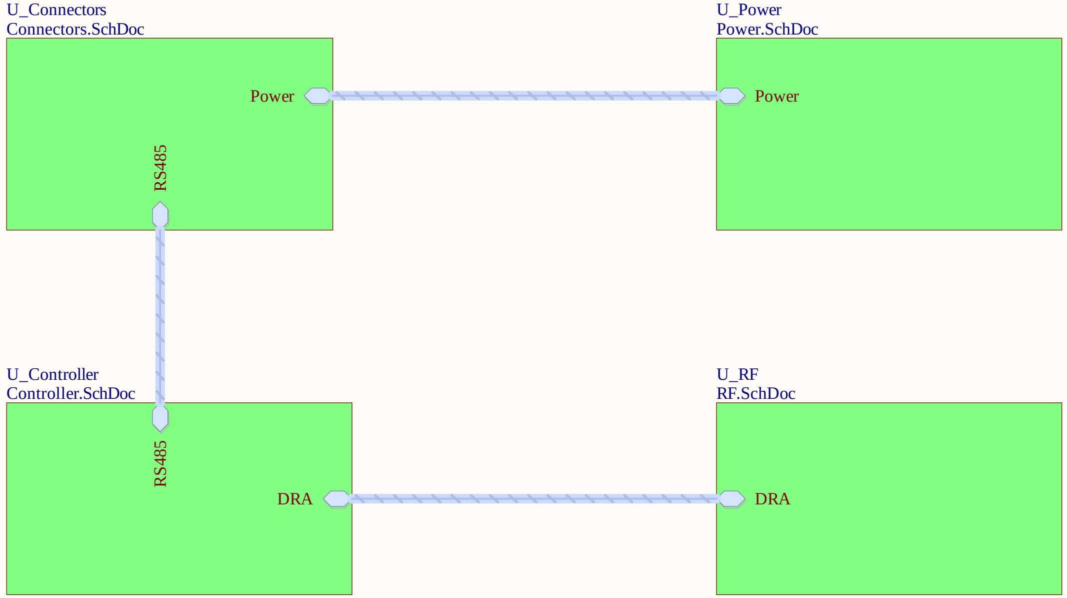
U_Connectors
Connectors.SchDoc
Power
RS485
U_Power
Power.SchDoc
Power
U_Controller
Controller.SchDoc
RS485
DRA
U_RF
RF.SchDoc
DRA

Title

Size
A4

Number

Revision

Date: 11-05-2025
File: D:\Work\..\Legend.SchDoc
Sheet of
Drawn By:

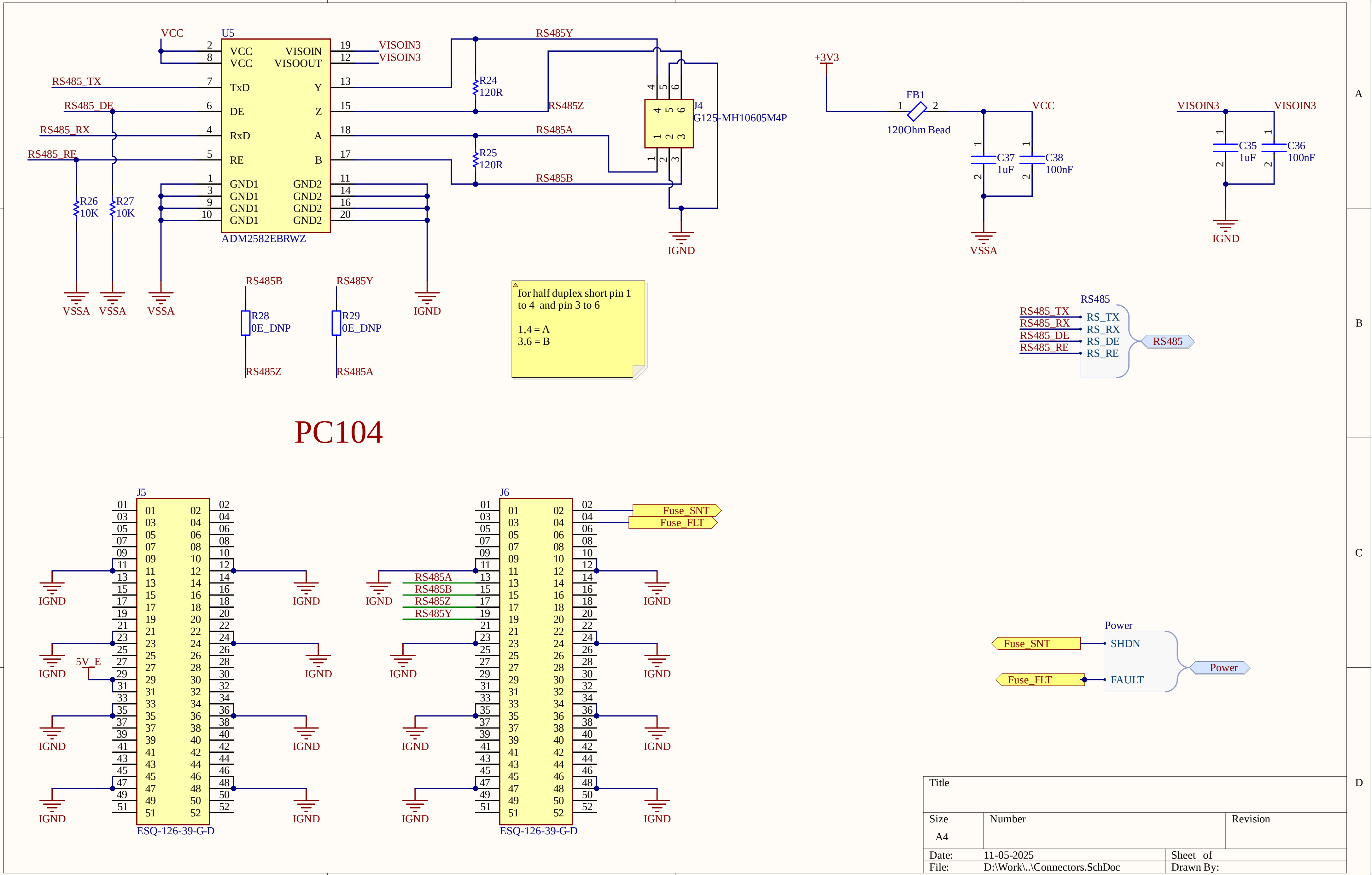
1
2
3
4
A
B
C
D
VCC
U5
ADM2582EBRWZ
VCC
VCC
TxD
DE
RxD
RE
GND1
GND2
VISOIN
VISOOUT
Y
Z
A
B
VISOIN3
RS485_TX
RS485_DE
RS485_RX
RS485_RE
RS485Y
RS485Z
RS485A
RS485B
R24
120R
R25
120R
R26
10K
R27
10K
VSSA
IGND
J4
G125-MH10605M4P
R28
0E_DNP
R29
0E_DNP
+3V3
FB1
120Ohm Bead
VCC
C37
1uF
C38
100nF
C35
1uF
C36
100nF
RS485
RS_TX
RS_RX
RS_DE
RS_RE
PC104
J5
J6
ESQ-126-39-G-D
5V_E
Fuse_SNT
Fuse_FLT
Power
SHDN
FAULT

for half duplex short pin 1
to 4 and pin 3 to 6

1,4 = A
3,6 = B

Title		
Size A4	Number	Revision
Date: 11-05-2025		Sheet of
File: D:\Work\..\Connectors.SchDoc		Drawn By:

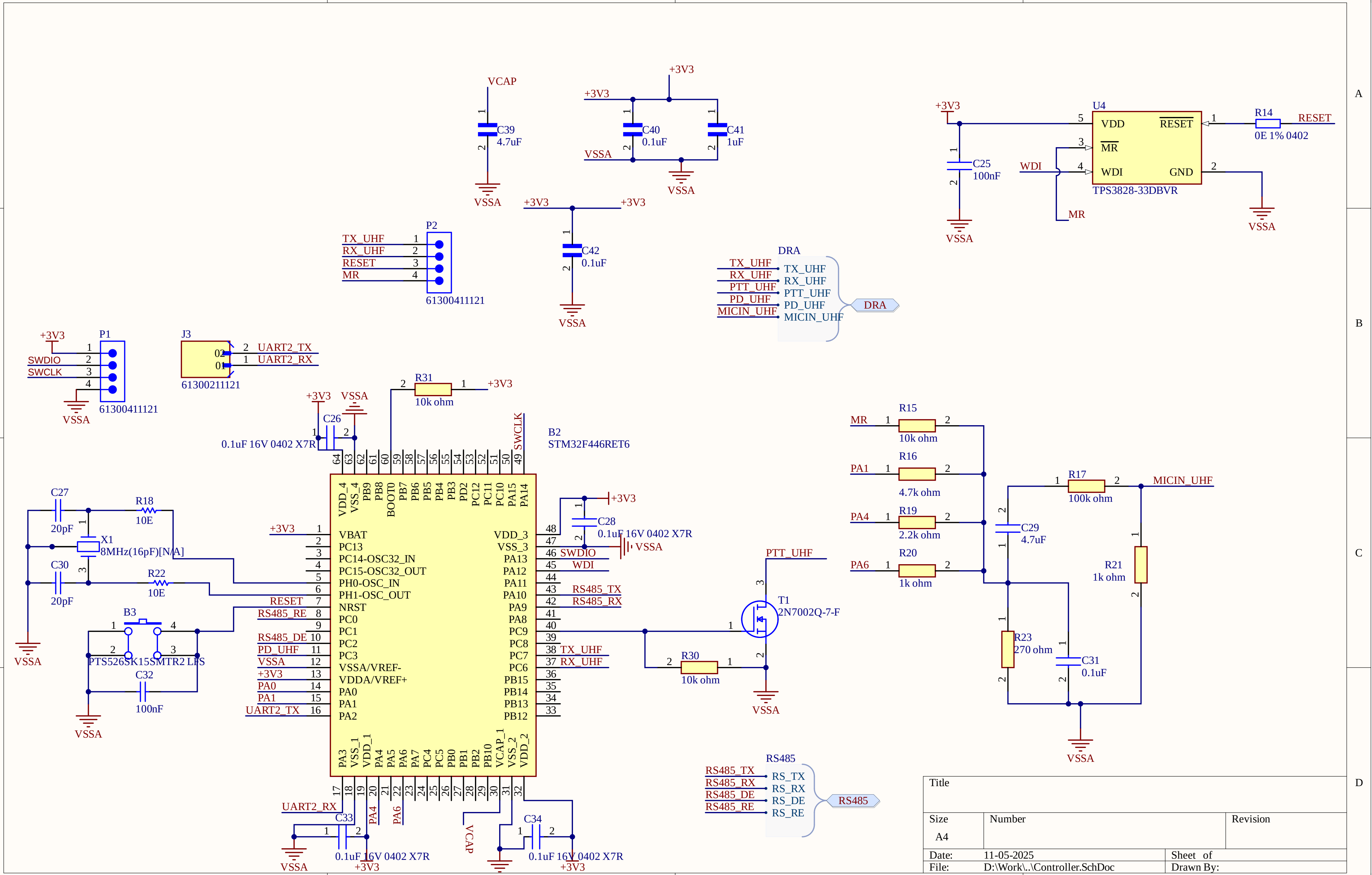
VCAP
C39
4.7uF
VSSA
+3V3
+3V3
C40
0.1uF
C41
1uF
VSSA
VSSA
+3V3
+3V3
C42
0.1uF
VSSA
P2
TX_UHF
RX_UHF
RESET
MR
61300411121
DRA
TX_UHF
RX_UHF
PTT_UHF
PD_UHF
MICIN_UHF
DRA
+3V3
U4
VDD
RESET
MR
WDI
GND
TPS3828-33DBVR
R14
0E 1% 0402
RESET
WDI
MR
C25
100nF
VSSA
VSSA
+3V3
P1
SWDIO
SWCLK
61300411121
VSSA
J3
UART2_TX
UART2_RX
61300211121
R31
10k ohm
+3V3
+3V3
VSSA
C26
0.1uF 16V 0402 X7R
SWCLK
B2
STM32F446RET6
VDD_4
VSS_4
PB9
PB8
BOOT0
PB7
PB6
PB5
PB4
PB3
PD2
PC12
PC11
PC10
PA15
PA14
VBAT
PC13
PC14-OSC32_IN
PC15-OSC32_OUT
PH0-OSC_IN
PH1-OSC_OUT
NRST
PC0
PC1
PC2
PC3
VSSA/VREF-
VDDA/VREF+
PA0
PA1
PA2
VDD_3
VSS_3
PA13
PA12
PA11
PA10
PA9
PA8
PC9
PC8
PC7
PC6
PB15
PB14
PB13
PB12
PA3
VSS_1
VDD_1
PA4
PA5
PA6
PA7
PC4
PC5
PB0
PB1
PB2
PB10
VCAP_1
VSS_2
VDD_2
+3V3
RESET
RS485_RE
RS485_DE
PD_UHF
VSSA
+3V3
PA0
PA1
UART2_TX
+3V3
C28
0.1uF 16V 0402 X7R
VSSA
SWDIO
WDI
RS485_TX
RS485_RX
TX_UHF
RX_UHF
C27
20pF
R18
10E
X1
8MHz(16pF)[N/A]
C30
20pF
R22
10E
VSSA
B3
PTS526SK15SMTR2 LFS
C32
100nF
VSSA
PTT_UHF
T1
2N7002Q-7-F
R30
10k ohm
VSSA
UART2_RX
C33
0.1uF 16V 0402 X7R
VSSA
+3V3
PA4
PA6
VCAP
C34
0.1uF 16V 0402 X7R
VSSA
+3V3
MR
R15
10k ohm
PA1
R16
4.7k ohm
PA4
R19
2.2k ohm
PA6
R20
1k ohm
R17
100k ohm
MICIN_UHF
C29
4.7uF
R21
1k ohm
R23
270 ohm
C31
0.1uF
VSSA
RS485
RS485_TX
RS485_RX
RS485_DE
RS485_RE
RS_TX
RS_RX
RS_DE
RS_RE
RS485

Title		
Size A4	Number	Revision
Date:	11-05-2025	Sheet of
File:	D:\Work\..\Controller.SchDoc	Drawn By:

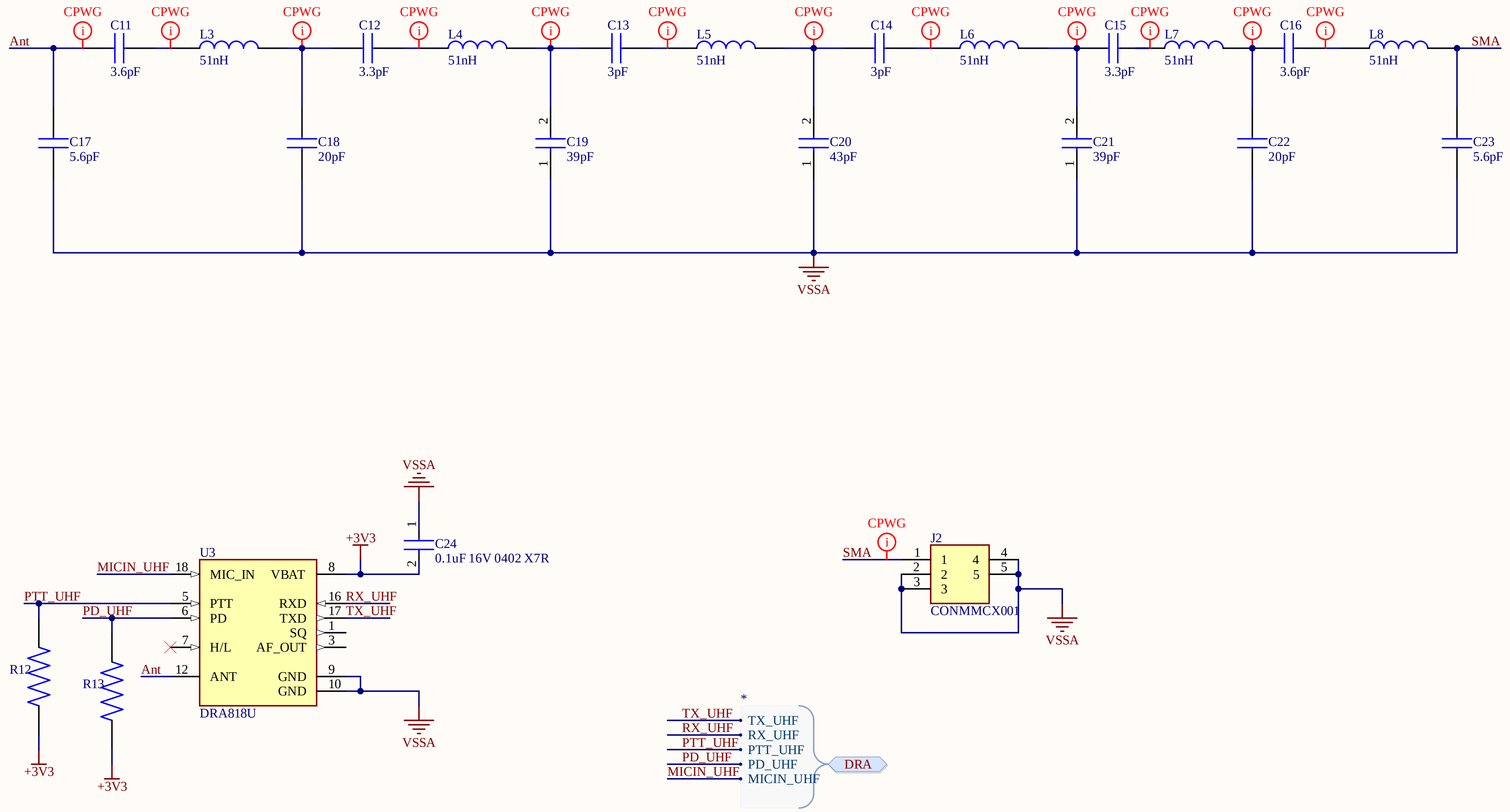
Ant
CPWG
C11
3.6pF
CPWG
L3
51nH
CPWG
C12
3.3pF
CPWG
L4
51nH
CPWG
C13
3pF
CPWG
L5
51nH
CPWG
C14
3pF
CPWG
L6
51nH
CPWG
C15
3.3pF
CPWG
L7
51nH
CPWG
C16
3.6pF
CPWG
L8
51nH
SMA
C17
5.6pF
C18
20pF
C19
39pF
C20
43pF
C21
39pF
C22
20pF
C23
5.6pF
VSSA
VSSA
+3V3
C24
0.1uF 16V 0402 X7R
U3
MICIN_UHF
PTT_UHF
PD_UHF
Ant
MIC_IN
VBAT
PTT
RXD
PD
TXD
SQ
H/L
AF_OUT
ANT
GND
GND
RX_UHF
TX_UHF
DRA818U
R12
R13
+3V3
+3V3
VSSA
CPWG
SMA
J2
CONMMCX001
VSSA
*
TX_UHF
RX_UHF
PTT_UHF
PD_UHF
MICIN_UHF
DRA

Title		
Size A4	Number	Revision
Date: 11-05-2025		Sheet of
File: D:\Work\..\RF.SchDoc		Drawn By:

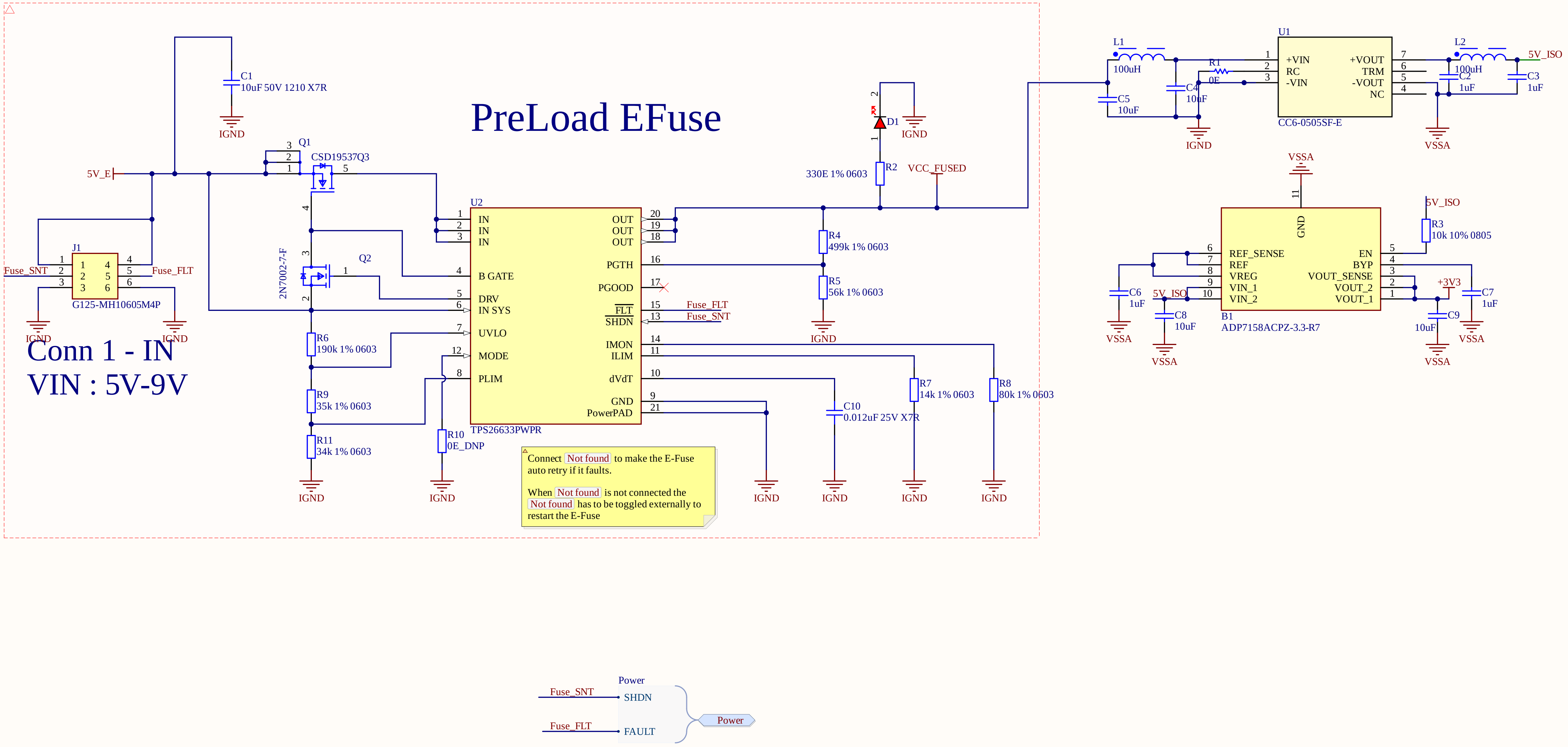
PreLoad EFuse
Conn 1 - IN
VIN : 5V-9V
5V_E
C1
10uF 50V 1210 X7R
IGND
Q1
CSD19537Q3
Q2
2N7002-7-F
J1
G125-MH10605M4P
Fuse_SNT
Fuse_FLT
U2
TPS26633PWPR
IN
B GATE
DRV
IN SYS
UVLO
MODE
PLIM
OUT
PGTH
PGOOD
FLT
SHDN
IMON
ILIM
dVdT
GND
PowerPAD
R6
190k 1% 0603
R9
35k 1% 0603
R11
34k 1% 0603
R10
0E_DNP
R4
499k 1% 0603
R5
56k 1% 0603
R2
330E 1% 0603
D1
VCC_FUSED
C10
0.012uF 25V X7R
R7
14k 1% 0603
R8
80k 1% 0603
L1
100uH
C5
10uF
C4
10uF
R1
0E
U1
CC6-0505SF-E
+VIN
RC
-VIN
+VOUT
TRM
-VOUT
NC
L2
100uH
C2
1uF
C3
1uF
5V_ISO
VSSA
B1
ADP7158ACPZ-3.3-R7
REF_SENSE
REF
VREG
VIN_1
VIN_2
EN
BYP
VOUT_SENSE
VOUT_2
VOUT_1
R3
10k 10% 0805
C6
1uF
C8
10uF
C9
10uF
C7
1uF
+3V3
Power
SHDN
FAULT

Connect Not found to make the E-Fuse auto retry if it faults.

When Not found is not connected the Not found has to be toggled externally to restart the E-Fuse

Title		
Size A3	Number	Revision
Date: 11-05-2025		Sheet of
File: D:\Work\..\Power.SchDoc		Drawn By: