Auto-Levelling Quadcopter Drone for Surveillance

In partial fulfilment for the award of the degree

Of

BACHELOR OF SCIENCE

IN ELECTRICAL AND COMPUTER ENGINEERING

(Control Engineering)

SUBMITTED BY:

NAME	ID.NO
1. NEWAY YIFRU……………...	0031/06
2. DIGITU ABEBE....…………...	0013/06
3. KERAJ SHIFERAW...………	0017/06

Under guidance of

Mr. Solomon

Department of Electrical & Computer Engineering

College Of Engineering and Technology

Madda walabu University

Bale Robe, Ethiopia

Date 13, 2018

BALE ROBE

ADVISORS APPROVAL SHEET

This is to certify that the thesis/project entitled**, "Auto-Levelling Quadcopter Drone for Surveillance"**, submitted in partial fulfillment of requirements for the degree of Bachelor of Science in Electrical and Computer Engineering with specialization "**Control Engineering**" under graduate program of the Department of Electrical and Computer Engineering and has been carried out by **"Neway Yifru, Digitu Abebe and Keraj Shiferaw"** under my supervision. Therefore I recommend that the student has fulfilled the requirements and they here by can submit the thesis/project to the college.

______________________	________________	_________________
Name of advisor	**Signature**	**Date**

DECLARATION

We hereby declare that thesis/project, "**Auto-Levelling Quadcopter Drone for Surveillance**", is our original work and has not been presented for a degree/Diploma in any other university, and all sources of material used for this thesis/project have duly acknowledged.

Name	**signature**	**Date**
Neway Yifru	________________	______________
Digitu Abebe	________________	______________
Keraj Shiferaw	________________	______________

ACKNOWLEDGEMENT

First and for most, we would like to express our heartily gratitude to our supervisor, **Mr. Selmon** for the guidance and enthusiasm given throughout the idea of this project. Our appreciation also goes to our family who has been so tolerant and supports to all these years. Thanks for their encouragement, love and emotional supports that they had given to ours.

We would also like to thanks all Electrical and Computer Engineering dep't teachers for their helps directly or indirectly and learns terms which related to this project. Nevertheless, our great appreciation dedicated to our best friends which members of fourth year and those whom involve directly or indirectly with this project. There is no such meaningful word than…..Thank You So Much.

TABLE OF CONTENTS

Contents

LIST OF FIGURE

LIST OF TABLE

LIST OF ABBREVIATIONS

DC	Direct Current
ESC	Electronic Speed Controller
MPU6050	Gyroscope and accelerometer sensor

ABSTRACT

Quadcopter also called as quadrotor helicopter, is popular in Unmanned Aerial Vehicles (UAV). A Quadcopter is a multicopter lifted and propelled by four rotors; they are widely used for variety of applications due to its small size and high stability, for our case we are going to design for Ethiopian airlines surveillance propose. In this paper design and development of remote controlled auto-leveling quadcopter, using PID (Proportional Integral Derivative) controller implemented with flight controller board will presented.

The system consists of IMU (Inertial Measurement Unit) which consists of accelerometer and gyro sensors to determine the system orientation and speed control of four BLDC motors to enable the quadcopter fly in six directions. Pitch, roll and yaw responses of quadcopter is obtained and PID controller is used to stabilize the system response. Finally, the prototype of quadcopter is build and PID logic will embedded on it.

Keywords: Quadcopter, UAV, surveillance, auto-leveling, PID and IMU.

CHAPTER- ONE

1. INTRODUCTION

This chapter will first discuss the motivation behind writing this thesis. A brief introduction about Unmanned Aerial Vehicles (UAVs), their history and uses will presented. We will then move to problems that make us to introduce this quadrotor and the objective and scope of project will explained. Lastly, the structure of the thesis will outlined.

1.1. Motivation

This thesis work will focus on the modelling and control of a quadrotor type UAV. The reason for choosing the quadrotor is in addition to its advantages that will addressed later, the research field is still facing some challenges in the control field because the quadrotor is a highly nonlinear, multivariable system and since it has six Degrees of Freedom (DOF) but only four actuators, it is an underactuated system [1]. Underactuated systems are those having a less number of control inputs compared to the system's degrees of freedom. They are very difficult to control due to the nonlinear coupling between the actuators and the degrees of freedom. Therefore, this thing gives motivation for work on it and it is fun to fly.

1.2. Unmanned Aerial Vehicles (drone)

The definition for UAVs varies from one literature to the other. For our purposes, UAVs are small aircrafts that are flown without a pilot. They can either be remotely operated by a human or they can be autonomous; autonomous vehicles are controlled by an on-board computer that can be pre-programmed to perform a specific task or a broad set of tasks. The definition used in this thesis is based on that of the American Institute of Aeronautics and Astronautics [4].

Quadcopters operate in fixed rotor propulsion mode, an advantage over the traditional helicopter. They have four rotors which are arranged in such a way that rotors on transverse ends rotate in the same direction, while the other two operate in the opposite direction [1]. Changing the parameters of the attitude (roll, pitch and yaw), and altitude determines the behaviour and position of the quadcopter. The throttle on each rotor changes its attitude.

UAVs were first manufactured by Lawrence and Sperry (USA) in the year 1916. They called it the Aviation Torpedo and they were able to fly it for a distance of 30 miles.

1.2.1. Applications of UAVs

UAVs were mainly used in military application but recently they are being deployed in civil applications too [5]. In addition to the military use, UAVs can be used in many civil or commercial applications that are too dull, too dirty or too dangerous for manned aircrafts. These uses include but not limited to:

- **Earth Science:** Measuring deformations in the Earth's crust that may be indications to natural disasters like earthquakes, landslides or volcano's.
- **Search and rescue:** UAVs equipped with cameras are used to search for survivors after natural disasters like earthquakes and hurricanes or survivors from shipwrecks and aircraft crashes [9, 10].
- **Border surveillance:** UAVs are used to patrol borders for any intruders, illegal immigrants or drug and weapon smuggling.
- **Research:** UAVs are also used in research conducted in universities to proof certain theories. Also, UAVs equipped with appropriate sensors are used by environmental research institutions to monitor certain environmental phenomena like pollution over large cities [10].
- **Industrial applications:** UAVs are used in various industrial applications such as pipeline inspection or surveillance and nuclear factories surveillance.

1.3. Problem of Statements

In Ethiopian airlines the surveillance system is manipulated using cameras that are mounted in a specific area for recording and controlling the situation in that particular area. The surveillance for particular area needs more than twenty cameras and also computers for recording and displaying the events. This make the surveillance system complex and tides moreover it needs more operator and maintenance time and cost and also cameras are covered by dust and other natural accidents because it is stationary.

Our thesis enables to modify these problems by using one camera and one computer for surveillance with this this auto-leveling quadcopter system.

1.4. Objective of the Thesis

1.4.1. General objective

- To solve the surveillance problem in Ethiopian airlines by designing quadcopter.

1.4.2. Specific objectives:

- To develop an intelligent system that can automatically level the quad copter.
- To design the circuit using atmega328p microcontroller.
- To develop the overall circuit.
- To dig the system mathematical model
- To understand system dynamic equations and rotor dynamic

1.5. Scope of Thesis

This project or thesis is intended to work for Ethiopian airlines surveillance purpose while the thesis is finished, however the system (quadcopter) can use for other missions like Ethiopian airlines. The quadcopter is more flexible flying object but has limitation in power consumption it is not used more than two hours in one charging conditions. So it is limited for long time use.

1.6. Significance of Thesis's

- This project minimize the expenditure (cost) of the company;
- To protects the cameras (electronic equipment's) from damage;
- Minimum energy consumption, for the maximization of efficiency of The installation and optimum performance-cost ratio;
- Reliability in operation and also to decrease usage of cameras for surveillance

1.7. The Structure of the Thesis

Chapter 1: contains the general introduction of the thesis, scope of work, statement problem, goal, objectives and structure of the thesis.

Chapter 2: presents a deep literature review of the commonly used quadrotors field together with some of the famous hardware platforms (components).

Chapter 3: presents methodology to design quadcopter and the mathematical modeling of a quadrotor UAV based on the Newton-Euler formalism in full details including the rotor dynamics and aerodynamic effects acting on the quadrotor body and all circuit and block diagram of the system.

Chapter 4: presents the results acquired and discussion about results and finally

Chapter 5: shows the conclusion and future work for this thesis.

CHAPTER TWO

2. LITERATURE REVIEW

In this chapter we provide some of the fundamental prospects that were explored during our fall project. We also explore all the mechanical and electrical components and sensors used in our quadcopter. Related works also explained her how much that helps us also briefly seen. The information in this chapter is useful in order to read the rest of this report.

2.1. Related Works

The quad rotor project required extensive research into similar systems. By reviewing others work, we used this insight to develop our system. To this end, research papers from various quadrotor groups were used as guides in the early development of the dynamics and control theory.

Vibha Kishor and Ms. Swati Singh [1], this paper focuses on the material used in quadcopter and addresses all the aspects of quadcopter ranging from mechanical design to the components used.

Pooja Srivastava, Tejaswi Ninawe, Chitral Puthran, and Vaishali Nirgude [4], this paper presents the design and implementation of an aerial surveillance quadcopter for search and rescue applications. The first phase of the paper considered modelling of the quadcopter while the second phase involved system implementation and simulation.

Andreas Vikane Hystad [3], developed and model a quadcopter implemented on an arduino microcontroller in Norwegian University of Science and Technology in his master thesis; this paper is very useful and motivation for our project.

2.2. Technologies

In designing auto-leveling quadcopter there are so many technologies introduced, that includes MPU6050 gyro-accelerometer sensor, which is the first and reliable 6DOF sensor.

The MPU- 60X0 is the world's first integrated 6-axis MotionTracking device that combines a 3-axis gyroscope, 3-axis accelerometer, and a Digital Motion Processor™ (DMP) all in a small 4x4x0.9mm package [7]. With its dedicated I2C sensor bus, it directly accepts inputs from an external 3-axis compass to provide a complete 9-axis MotionFusion™ output. The MPU-6050 MotionTracking device, with its 6-axis integration, on-board MotionFusion™, and run-time calibration firmware, enables manufacturers to eliminate the costly and complex selection, qualification, and system level integration of discrete devices, guaranteeing optimal motion performance for consumers [8].

2.3. Quadcopter Components

The various sensors and components used in our quadcopter platform were explored and evaluated, and will be briefly summarized here. Hardware components like Arduino, electronic speed controller, brushless motor etc. and software like Arduino IDE will briefly explained here.

2.3.1. Arduino Uno Board

Arduino is an open-source prototyping platform based on easy-to-use hardware and software. The Atmel-atmega328p combines a rich instruction set with 32 general-purpose working registers. All the 32 registers are directly connected to the Arithmetic Logic Unit (ALU)

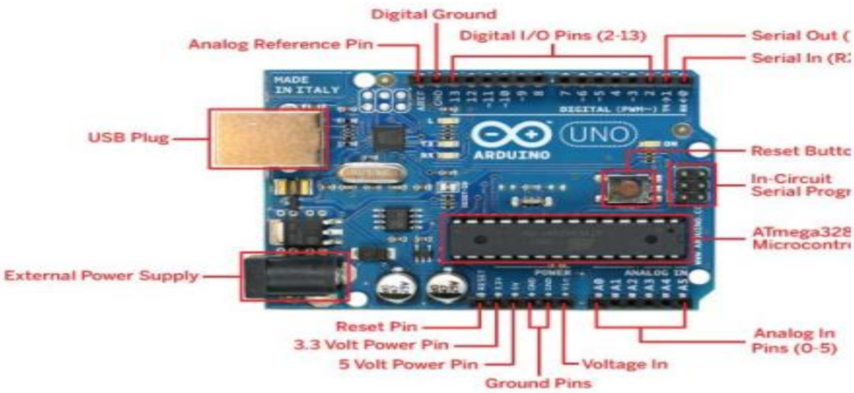

Figure 2.1 Arduino Board

The ATmega328/P provides the following features:

- ✓ 32Kbytes of In-System Programmable Flash with Read-While-Write capabilities,
- ✓ 1Kbytes EEPROM,
- ✓ 2Kbytes SRAM,
- ✓ 23 general purpose I/O lines,
- ✓ 32 general purpose working registers,
- ✓ Real Time Counter (RTC),
- ✓ Three flexible Timer/Counters with compare modes and PWM,
- ✓ 1 serial programmable USARTs ,
- ✓ 1 byte-oriented 2-wire Serial Interface (I2C),
- ✓ 6- channel 10-bit ADC (8 channels in TQFP and QFN/MLF packages) ,
- ✓ programmable Watchdog Timer with internal Oscillator,
- ✓ SPI serial port, and six software selectable power saving modes

Those features make an arduino-uno our flight controller board and it is easy to write code on it using integrated development environment software. Based on our requirements the Arduino Uno is a good and suitable choice, it passes all requirements with clear margins, it is not expensive and it is deemed as a reliable board. The programming language used in Arduino is c, with a huge number of official libraries that can be used in the code.

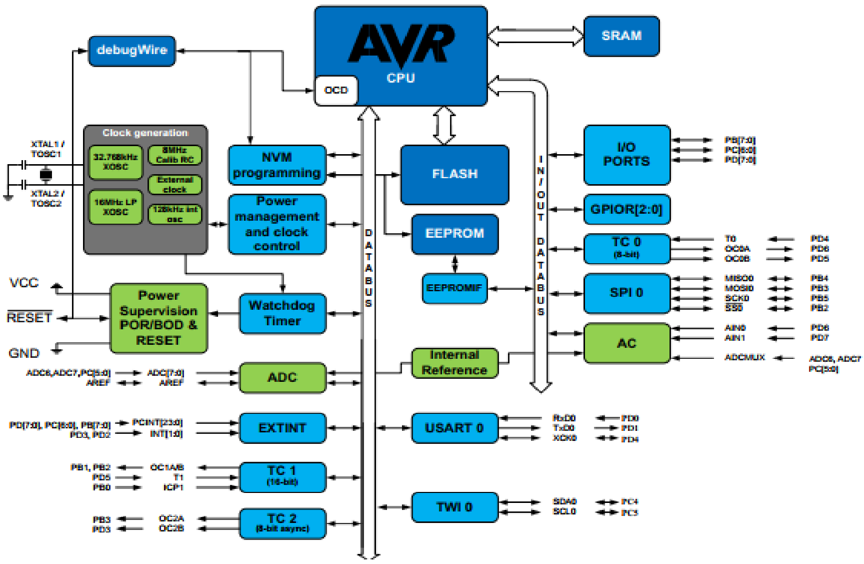

Figure 2.2 Arduino uno (atmega 328p) block diagram

2.3.2. Motors

We require high quality reliable motors with rapid response in order to control the quadcopter. If one or several of the motors at some point during a flight experience any problems it would be devastating for the quadcopter, and can at worst endanger the quadcopter itself, property and people. Furthermore it is important that the motors are powerful enough to be able to lift the quadcopter and perform various aerial movements. We also require the motors to have a fast response in order to ensure a more stable flight. Finally we require that the motors are close to vibration free, as any vibration will cause noise in our IMU measurements.

Based on these criteria's we decided to acquire the SunnySky Angel A2212 KV1000 Brushless Motor. It is a brushless motor designed for remote controlled airplanes as well as quadcopters, and are considered to be highly reliable.

Brushless DC electric motor (BLDC motors, BL motors) also known as electronically commutated motors (ECMs, EC motors) are synchronous motors that are powered by a DC electric source via an integrated inverter/switching power supply, which produces an AC electric signal to drive the motor. In this context, AC, alternating current, does not imply a sinusoidal waveform, but rather a bi-directional current with no restriction on waveform. The rotor part of a brushless motor is often a permanent magnet synchronous motor. Two key performance parameters of brushless DC motors are the motor constants KV and Km [9].

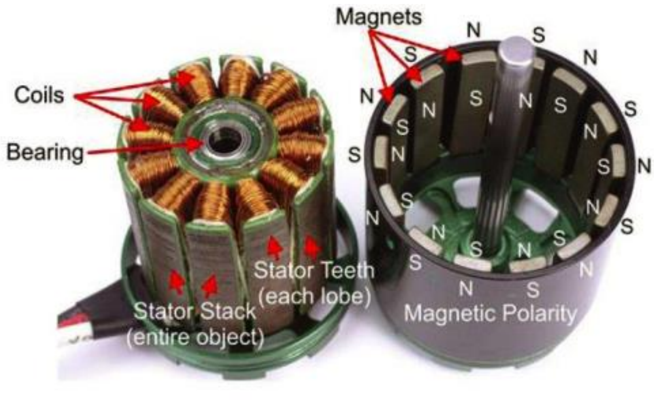

Figure 2.3 Outrunner Brushless DC Motor

In a brushless DC motor (BLDC), you put the permanent magnets on the rotor and you move the electromagnets to the stator. Then you use a computer (connected to high-power transistors) to charge up the electromagnets as the shaft turns. This system has all sorts of advantages:

- Because a computer controls the motor instead of mechanical brushes, it's more precise. The ESC’s can also factor the speed of the motor into the equation. This makes brushless motors more efficient.
- There is no sparking and much less electrical noise.
- There are no brushes to wear out.
- With the electromagnets on the stator, they are very easy to cool.
- You can have a lot of electromagnets on the stator for more precise control.

The only disadvantage of a brushless motor is its higher initial cost, but you can often recover that cost through the greater efficiency over the life of the motor.

Motors are rated according to continuous draw current, and kV.

- Continuous draw current, in amps.
    - ✓ Tells you how much current the motor uses in normal operation.
- Kv – Measures the number of revolutions per minute per volt.
    - ✓ E.g. a 1000Kv motor produces 1,000 RPM per volt.

Figure 2.4 1000Kv DLDC Motors

2.3.3. Electronic Speed Controller's

Four 30A ESCs (electronic speed controllers) are used in proposed Quadcopter. It convert the PWM signal received from flight controller or radio receiver and then drives the brush less motor by providing required electrical power. Thus ESC is an electric circuit that control the speed and direction of electric motor by varying the magnetic forces created by the windings and magnets within the motor. The electronic speed control, or ESC, is what tells the motors how fast to spin at any given time.

The ESCs are then connected directly to the battery through either a wiring harness or power distribution board. Many ESCs come with a built in battery eliminator circuit (BEC), which allows you to power things like your flight control board and radio receiver without connecting them directly to the battery. Because the motors on a quadcopter must all spin at precise speeds to achieve accurate flight, the ESC is very important.

ESCs are normally rated according to maximum current. We are using 30 A. Generally the higher the rating, the larger and heavier the ESC tends to be which a factor when calculating mass is and balance in airplanes. Many modern ESCs support nickel metal hydride, lithium ion polymer and lithium iron phosphate batteries with a range of input and cut-off voltages. The type of battery and number of cells connected is an important consideration when choosing a Battery eliminator circuit (BEC), whether built into the controller or as a stand-alone unit [9].

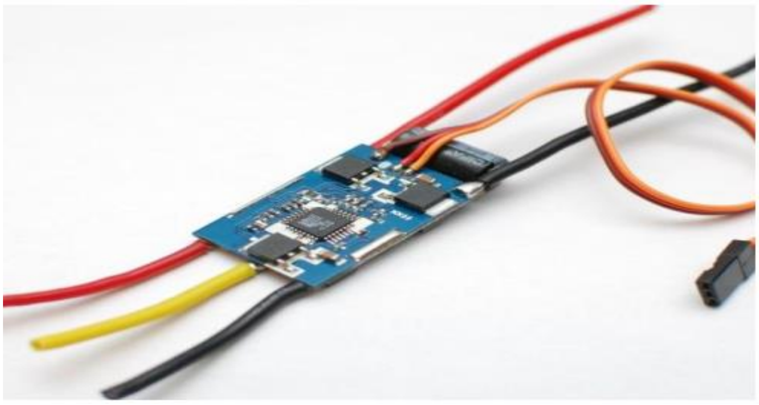

Figure 2.5 ESC's With BEC

The ESC controls the speed of BLDC motor with frequency, not voltage. If you plug an 11.1 volt battery into your power system, It produces 3 separate waves (one for each wire to the motor). The speed of the motor has nothing to do with voltage or amps, but instead the timing of the current fed into it. By increasing and decreasing the wave length (frequency) of the trapezoidal wave on the 3 terminals, the ESC causes the motor to spin faster and slower. The ESC switches the polarity of the phases to create the waves. This means that the voltage through any given winding flows 'Alternately' one direction then the other. This creates a push-pull effect in the magnetic field of each winding, making the motor more powerful for its size and weight. The motor and the load that is placed on it, is what determines the amp draw from the ESC and the battery.

Figure 2.6 30A ESC

2.3.4. MPU 6050 Gyro-Accelerometer sensor

Precision and accuracy is important when it comes to Accelerometer and gyroscope measurement. We require a 3-axis accelerometer and gyroscope that provides reliable and accurate data. It is also an advantage if they can be on the same chip. For this reason we went with the MPU-600, which is a small, thin, ultralow power, 3-axis accelerometer and gyroscope. The device is very accurate, as it contains 16-bis analog to digital conversion hardware for each channel [8].

Figure 2.7 IMU Used In Our Quadcopter

2.3.5. Propellers

Here in this project quadcopter need of two types of propellers to feed the purpose of flight. A pair of clockwise (CW) and anticlockwise (ACW) propellers is needed. The care should be taken in finalizing the dimensions of the propellers. A propeller is a type of fan that transmits power by converting rotational motion into thrust. A pressure difference is produced between the forward and rear surfaces of the air foil-shaped blade, and a fluid (such as air or water) is accelerated behind the blade. Propeller dynamics can be modelled by both Bernoulli's principle and Newton's third law[10]. A marine propeller is sometimes colloquially known as pitch of the screw. Generally, increased propeller pitch and length will draw more current. Also the pitch can be defined as the travel distance of one single prop rotation. In a nutshell, higher pitch means slower rotation, but will increase your vehicle speed which also uses more power.

The requirements for the propellers are less strict than those for the motors. We require light propellers with size and lift potential such that the quadcopter can hover at less than 50 % of the motor capacity. It is also preferable if the propeller can survive soft bumps. For our quadcopter we choose plastic 10X4.5 propellers (254mmx114mm) with their light weight. This is a standard propeller used by many quadcopters. The total length of the propeller is 254mm while the pitch is 114mm [1].

Figure 2.8 Propellers

2.3.6. Fly sky Transmitter and Receiver

Radio communication is essential for controlling the quadcopter, as well as for tuning when testing the controllers and providing data during flight. It can also serve as a great tool when extending the usage for practical applications. The radio link needs to run on frequencies dedicated for private use in Norway, and is required to have 100 meter range, or more in open terrain. Fly sky Transmitter and Receiver which we are using is CT6B which has 6 channels

The transmitter itself generates a radio frequency alternating current, which is applied to the antenna. When excited by this alternating current, the antenna radiates radio waves. The term transmitter is usually limited to equipment that generates radio waves for communication purposes; or radiolocation, such as radar and navigational transmitters. A transmitter can be a separate piece of electronic equipment, or an electrical circuit within another electronic device. A transmitter and receiver combined in one unit are called a transceiver.

A radio receiver is an electronic circuit that receives its input from an antenna, uses electronic filters to separate a wanted radio signal from all other signals picked up by this antenna, amplifies it to a level suitable for further processing, and finally converts through demodulation and decoding the signal into a form usable for the consumer. It receives decoded messages/information from the sender, who first encoded them. Sometimes the receiver is modelled so as to include the decoder. In the given figure below:

Right Stick: The right stick controls roll and pitch. In other words, it moves your quadcopter left/right and backwards/forwards.

Left Stick: The left stick controls yaw and throttle. In other words, it rotates your quadcopter clockwise or counterclockwise, and it adjusts the height at which you are flying.

Figure 2.9 Transmitter and Receiver

2.3.7. LIPO Battery

A lithium polymer battery, or more correctly lithium-ion polymer battery (abbreviated variously as LiPo, LIP, Li-poly and others), is a rechargeable battery of lithium-ion technology in a pouch format. Unlike cylindrical and prismatic cells, LiPos come in a soft package or pouch, which makes them lighter but also less rigid. Quadcopters typically use LiPo batteries which come in a variety of sizes and configurations. We typically use 3S1P batteries, which indicate 3 cells in parallel. Each cell is 3.7 volts, so this battery is rated at 11.1 volts. LiPo batteries also have a C rating and a power rating in mAh (which stands for milliamps per hour). The C rating describes the rate at which power can be drawn from the battery, and the power rating describes how much power the battery can supply. Larger batteries weigh more so there is always a trade-off between flight duration and total weight. A general rule of thumb is that doubling the battery power will get you 50% more flight time, assuming your quadcopter can lift the additional weight.

Li Po batteries have three main things going for them that make them the perfect battery choice for RC planes and even more so for RC helicopters over conventional rechargeable battery types such as NiCad, or NiMH.

- Li Po batteries are light weight and can be made in almost any shape and size.
- Li Po batteries have high discharge rates to power the most demanding electric motors.
- Li Po batteries hold lots of power in a small package

Figure 2.10 3S/2200mAh/30C Lipo Battery

2.3.8. Frame

Quadcopter frame can be called as the chassis of the quadcopter. The frame can be achieved in different configurations such as +, X, H, etc…the selection of the frame is totally a user defined choice based on his own purposes. Usually made of nylon, plastic or carbon fibre. Hold the motor, electronic speed controllers, battery, flight controller and receiver.

Figure 2.11 Frame (Chase)

2.3.9. Cameras

Used for capturing and recording the condition in that place where we move our quadcopter.

2.3.10. Diode, Resistors and LED

The diode D1 protects the USB port of the computer when the Arduino is connected to the computer. This diode has an important function and cannot be excluded.

The resistors divide the flight battery voltage by 2.5. This way it is possible to measure the battery voltage during flight. The LED will light up when the battery voltage gets to low and the motor rpm automatically increase to compensate the dropping battery voltage during flight. The 1kΩ and 1.5kΩ resistors need to be installed correctly otherwise the quadcopter will not fly perfect

Figure 2.12 Diode and Resistors

2.3.11. Software Used

The Arduino Integrated Development Environment - or Arduino Software (IDE) - contains a text editor for writing code, a message area, a text console, a toolbar with buttons for common functions and a series of menus. It connects to the Arduino and Genuino hardware to upload programs and communicate with them. For seek of simple program and availability of material we are using Arduino Integrated Development Environment (IDE) software for our project.

CHAPTER THREE

3. METHODOLOGY

In this chapter, the procedure will be discussed and block diagram will present and the kinematics and dynamics models of a quadrotor will be derived based on Newton-Euler formalism with the following assumptions:

- ✓ The structure is rigid and symmetrical.
- ✓ The centre of gravity of the quadrotor coincides with the body fixed frame origin.
- ✓ The propellers are rigid.
- ✓ Thrust and drag are proportional to the square of propeller's speed.

After deriving the kinematics and dynamics models of the quadrotor, the aerodynamic effects acting on the quadrotor body will be discussed together with the rotor dynamics of the actuators of the quadrotor.

3.1. Block Diagram

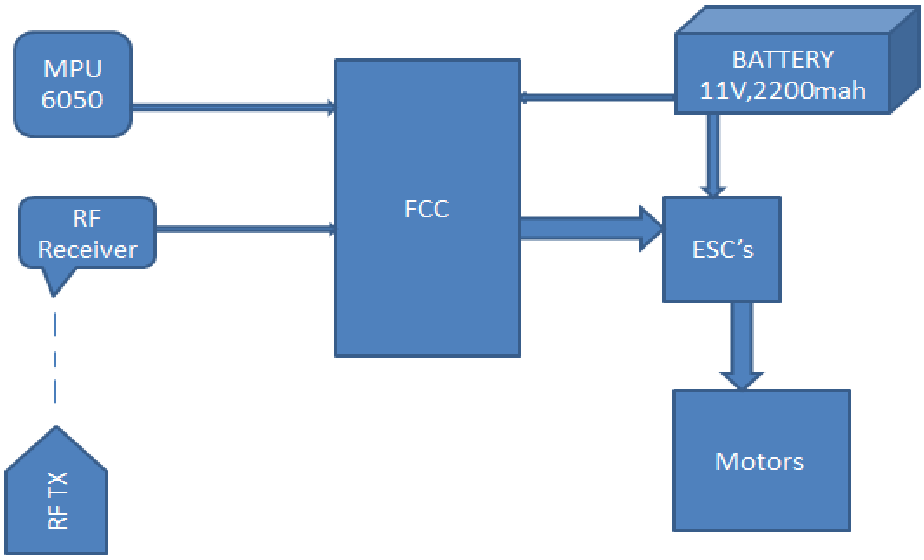

Figure 3.1 Block Diagram of the Project

3.2. Procedures

- The flight controller computer (FCC) receives signal from transmitter and from the gyro/accelerometer sensor
- The FCC calculates this signal and it gives the desired signal to electronic speed controllers(ESC’s)
- The ESC’s drives the motors to the required direction and speed
- When the transmitter stick is released the gyro and accelerometer sensor gives signal to FCC
- The controller levels the quadcopter automatically by calculating the error with respect to the desired value.
- The power required by the motor is gained from Lipo battery through electronic speed controllers
- The motors are placed in the form of ‘‘X’’ shape for better response because the air resistance is minimum at this condition for pitch movement.

3.3. Flow Chart

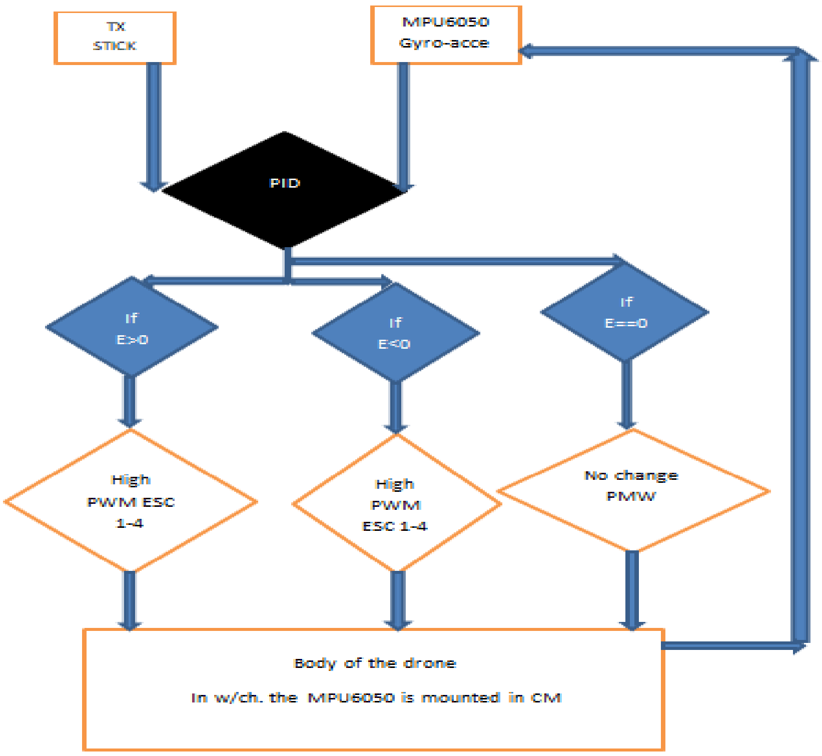

Figure 3.13 Flow Chart

3.4. Mathematical Modelling of Quadcopter

One of the aims of the work is to stabilize the quadcopter in the hovering condition. The following assumptions were made:

- System structure is supposed to be rigid and symmetrical.
- Earth fixed reference frame is assumed to be inertial.
- The rotors are rigid, i.e. no blade flapping occurs.

Attitude of the quadcopter is defined by roll, pitch and yaw angles; namely ϕ, θ, and ψ respectively. Angular velocity components in body reference frame are p, q, and r, respectively. F1, F2, F3, and F4 are the thrust forces from the four motors, which are generated by propellers. Axes and states are represented in Figure 17. The quadrotor, an aircraft made up of four engines, holds the electronic board in the middle and the engines at four extremities. Before describing the mathematical model of a quadrotor, it is necessary to introduce the reference coordinates in which we describe the structure and the position. For the quadrotor, it is possible to use two reference systems. The first is fixed and the second is mobile. The fixed coordinate system, called also inertial, is a system where the first Newton's law is considered valid.

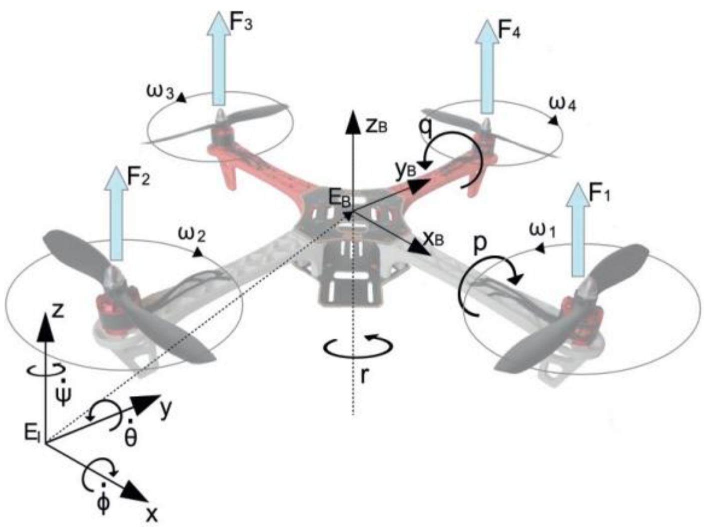

Figure 3.3 Inertia and Body Fixed Frame of Quadrotor

Each propeller rotates at the angular velocity ω_i producing the corresponding force F_i directed upward sand the counteracting torque directed opposite to the direction of the rotation. Propellers with the angular speed $\omega 1$ and $\omega 3$ spin counter-clockwise and the other two spin clockwise.

3.4.1. The Rotation Matrix

In order to transform vectors between different coordinate systems, we use rotation matrices. The distance between the Earth frame and the body frame describes the absolute position of the center of mass of the quadrotor r = $[x\ y\ z]^T$. The rotation R from the body frame to the inertial frame describes the orientation of the quadrotor. The orientation of the quadrotor is described using roll, pitch and yaw angles (φ, θ and ψ) representing rotations about the X, Y and Z-axes respectively. Assuming the order of rotation to be roll (φ), pitch (θ) then yaw (ψ), the rotation matrix R which is derived based on the sequence of principle rotations is:

$$R_{x,\varphi} = \begin{bmatrix} 1 & 0 & 0 \\ 0 & \cos\varphi & -\sin\varphi \\ 0 & \sin\varphi & \cos\varphi \end{bmatrix} \tag{3.1}$$

$$R_{y,\theta} = \begin{bmatrix} \cos\theta & 0 & \sin\theta \\ 0 & 1 & 0 \\ -\sin\theta & 0 & \cos\theta \end{bmatrix} \tag{3.2}$$

$$R_{z,\phi} = \begin{bmatrix} \cos\phi & -\sin\phi & 0 \\ \sin\phi & \cos\phi & 0 \\ 0 & 0 & 1 \end{bmatrix} \tag{3.3}$$

To be able to calculate the total conversion from the body frame to the navigation frame (R_b^n) all the three matrixes can be multiplied together. The result is a complete rotation matrix of (Equation 3.1, 3.2 and 3.3) [11]. The motor force vector can be expressed in the navigation frame if multiplied with this rotation matrix. Once the force is represented in the navigation frame the total thrust needed to hoover can be found.

$$R_b^n = [R_{x,\varphi}]\,[R_{y,\theta}]\,[R_{z,\phi}] \tag{3.4}$$

$$R_b^n = \begin{bmatrix} 1 & 0 & 0 \\ 0 & \cos\varphi & -\sin\varphi \\ 0 & \sin\varphi & \cos\varphi \end{bmatrix} \begin{bmatrix} \cos\theta & 0 & \sin\theta \\ 0 & 1 & 0 \\ -\sin\theta & 0 & \cos\theta \end{bmatrix} \begin{bmatrix} \cos\phi & -\sin\phi & 0 \\ \sin\phi & \cos\phi & 0 \\ 0 & 0 & 1 \end{bmatrix}$$

$$R_b^n = \begin{bmatrix} c(\varphi)c(\theta) & -s(\varphi)c(\phi) + c(\varphi)s(\theta)s(\phi) & s(\varphi)s(\phi) + c(\varphi)c(\phi)s(\theta) \\ s(\varphi)c(\theta) & c(\varphi)c(\phi) + s(\phi)s(\theta)s(\varphi) & -c(\varphi)s(\phi) + s(\theta)s(\varphi)c(\phi) \\ -s(\theta) & c(\theta)s(\phi) & c(\theta)c(\phi) \end{bmatrix} \tag{3.5}$$

Where $c(*) = \cos(*)$, $s(*) = \sin(*)$ and $t(*) = \tan(*)$. The calculated matrix gives the convention from BODY to Inertia frame. In some cases it can be useful to transform from Inertia frame to BODY frame.

Generally a rotation matrix R is any matrix satisfying

$$RR^T = R^T R = I; \quad \det(R) = 1 \tag{3.6}$$

This implies that R is orthogonal, and as a consequence the inverse rotation matrix is given by $R-1 = R^T$. Hence

$$R_n{}^b = (R_b{}^n)^{-1} = (R_b{}^n)^T \tag{3.7}$$

By using this property

$$R_n{}^b = \begin{bmatrix} c(\varphi)c(\theta) & s(\varphi)c(\theta) & -s(\theta) \\ -s(\varphi)c(\phi) + c(\varphi)s(\theta)s(\phi) & c(\varphi)c(\phi) + s(\phi)s(\theta)s(\varphi) & c(\theta)s(\phi) \\ s(\varphi)s(\phi) + c(\varphi)c(\phi)s(\theta) & -c(\varphi)s(\phi) + s(\theta)s(\varphi)c(\phi) & c(\theta)c(\phi) \end{bmatrix} \tag{3.8}$$

Each vectors R in the body frame can be transformed into the earth frame by multiplying the vector with the rotational transformation matrix, referred as $R_b{}^n$.

$$R_{navigation} = R^n{}_b \cdot R_{body} \tag{3.9}$$

The rotation matrix R will be used in formulating the dynamics model of the quadrotor, its significance is due to the fact that some states are measured in the body frame (e.g. the thrust forces produced by the propellers) while some others are measured in the inertial frame (e.g. the gravitational forces and the quadrotor's position). Thus, to have a relation between both types of states, a transformation from one frame to the other is needed.

To acquire information about the angular velocity of the quadrotor, typically an on-board Inertial Measurement Unit (IMU) is used which will in turn give the velocity in the body coordinate frame. To relate the Euler rates $\dot{\eta} = [\dot{\varphi}\ \dot{\theta}\ \dot{\psi}]^T$ that is measured in the inertial frame and angular body rates $\omega = [p\ q\ r]^T$, a transformation is needed as follows:

$$\omega = [p\ q\ r]^T = [R_{x,}\ \dot{\varphi}]\begin{bmatrix}\dot{\varphi}\\ 0\\ 0\end{bmatrix} + [R_{x,}\ \varphi]\ [R_{y,}\ \dot{\theta}]\begin{bmatrix}0\\ \dot{\theta}\\ 0\end{bmatrix} + [R_{x,}\ \varphi]\ [R_{y,}\ \theta]\ [R_{z,}\ \dot{\psi}]\begin{bmatrix}0\\ 0\\ \dot{\psi}\end{bmatrix}$$

$$\omega = R_r\ \dot{\eta} \tag{3.10}$$

Note that $\dot{\varphi}$, $\dot{\theta}$ and $\dot{\psi}$ are small thus $R(\dot{\varphi}) = R(\dot{\theta}) = R(\dot{\psi}) = I$, then

$$R_r = \begin{bmatrix}1 & 0 & -s(\theta)\\ 0 & c(\phi) & c(\theta)s(\phi)\\ 0 & -s(\phi) & c(\theta)c(\phi)\end{bmatrix}\begin{bmatrix}\dot{\varphi}\\ \dot{\theta}\\ \dot{\psi}\end{bmatrix} \tag{3.11}$$

Around the hover position, small angle assumption is made where cos $\varphi \equiv 1$, cos $\theta \equiv 1$ and sin φ = sin θ = 0. Thus Rr can be simplified to an identity matrix I [3x3]. Thus the inertial angular rate and body angular velocity become same.

3.4.2. Motor Reference

The motors rotation and position is also of significant. Motor one and three are placed along the X-axis and rotate the in the counterclockwise direction. Motor two and four are placed on the Y-axis and rotate in the clockwise direction (Figure 18).

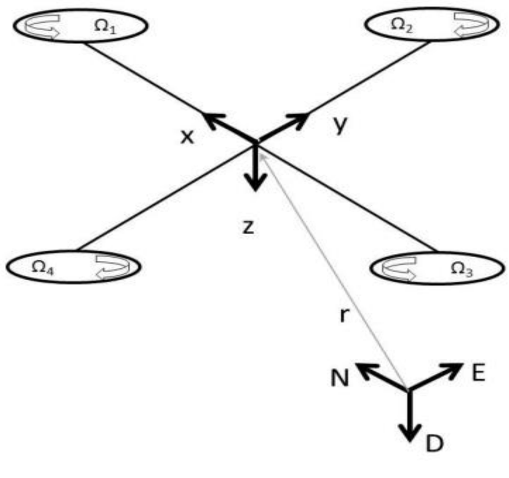

Figure 3.4 Quadrotor Reference frame

3.5. Dynamic Model

To start setting up a dynamic model, the most basic thing is to map which forces is acting on the module. In this section the forces like gravity and thrust from propeller will be explained how it affect a quadcopter. The position for the motors can be seen in above figure. Each motor have its own force acting in negative direction and also an moment that is acting in the opposite direction of the rotation of the motors.

The motion of the quadrotor can be divided into two subsystems; rotational subsystem (roll, pitch and yaw) and translational subsystem (altitude and x and y position). The rotational subsystem is fully actuated while the translational subsystem is underactuated [8].

3.5.1. Translational Equations of Motion

The translation equations of motion for the quadrotor are based on Newton's second law and they are derived in the Earth inertial frame.

$$F_b = m.a_b \tag{3.12}$$

Where F_b is the force vector in body axes, m is the body mass and a_b is the acceleration vector in body axes. The force vector can be derived as the following:

The thrust force vector in body axes for each motor is

$$T_i = b\Omega_i^2 (-\hat{z}_b) = -b\Omega_i^2 \hat{z}_b \tag{3.13}$$

The negative sign is due to the fact that the thrust is upwards while the positive z-axis in the body framed is pointing downwards. Then, the total thrust force vector in body axes is given by:

$$T = -b\,(\Omega_1^2 + \Omega_2^2 + \Omega_3^2 + \Omega_4^2)\hat{z}_b \tag{3.14}$$

The gravitational force vector in inertial frame is

$F_g = mg\,\hat{Z}$ Transforming the gravitational force to body axes

$$F_{gb} = mg \begin{bmatrix} -s(\theta) \\ c(\theta)s(\phi) \\ c(\theta)c(\phi) \end{bmatrix} \tag{3.15}$$

Generally the translation equation of motion or force equation of equation (3.12) can be rewritten as following:

$$F_b = m.a_b = T + F_{gb} = -b\,(\Omega_1^2 + \Omega_2^2 + \Omega_3^2 + \Omega_4^2)\hat{z}_b + mg \begin{bmatrix} -s(\theta) \\ c(\theta)s(\phi) \\ c(\theta)c(\phi) \end{bmatrix} \tag{3.16}$$

$$\text{Then } a_b = F/m = \begin{bmatrix} -gs(\theta) \\ gc(\theta)s(\phi) \\ \frac{-u1}{m} + gc(\theta)c(\phi) \end{bmatrix} \tag{3.17}$$

Where $u1 = b \sum_{i=1}^{i=4} \Omega i\hat{}2$

3.5.2. Rotational equations of motion

The rotational equations of motion are derived in the body frame using the Newton-Euler method with the following general formalism,

$$M_b = J\,\dot{\omega} + \omega \times J\,\omega + M_G \tag{3.18}$$

Where:

J Quadrotor's diagonal inertia Matrix the off-diagonal elements, which are the product of inertia, are zero due to the symmetry of the quadrotor.

ω Angular body rates

M_G Gyroscopic moments due to rotors' inertia; are defined to be $\omega \times [0\ 0\ Jr\Omega r]^T$,

M_b Moments acting on the quadrotor in the body frame

Jr rotors' inertia

Ωr rotors' relative speed $\Omega r = -\Omega 1 + \Omega 2 - \Omega 3 + \Omega 4$

The reason behind deriving the rotational equations of motion in the body frame and not in the inertial frame is to have the inertia matrix independent on time.

By identifying the forces and moments generated by the propellers, we can study the moments M_b acting on the quadrotor. Figure 19 shows the forces and moments acting on the quadrotor. Each rotor causes an upwards thrust force *Fi* and generates a moment M_i with direction opposite to the direction of rotation of the corresponding rotor *i*. Starting with the moments about the body frame's x-axis, by using the right-handrule in association with the axes of the body frame, F_2 multiplied by the moment arm *l* generates a negative moment about the y-axis, while in the same manner, F_4 generates a positive moment. Thus the total moment about the x-axis can be expressed as

$$M_x = -F_2 l + F_4 l = -(b\Omega_2^{\,2})l + (b\Omega_2^{\,4})l \tag{3.19}$$

Then generally the angular rate at body frame is calculated as:

$\dot{\omega}$ = [p q r] T = $J^{-1} \sum Mg$ - J^{-1} [ω × J ω]

$$\dot{\omega} = [p\ q\ r]^{T} = \begin{bmatrix} ((Jy - Jz)qr + u2)/Jx \\ ((Jz - Jx)pr + u3)/Jy \\ ((Jx - Jy)qp + u4)/Jz \end{bmatrix} \quad (3.20)$$

Linearizing (3.11) and (20) using small disturbance theory [11] to get the linear open loop transfer function. Linearization is made at hovering condition where

p = q = r = $\dot{\varphi} = \dot{\theta} = \dot{\psi} = 0$ and for implementation, it is required to transform the control action into angular velocity for each motor according to allocation method [14] as given:

$$\Omega 2 = \Omega_{nom} - 0.5Ș_{lat} \quad (3.21)$$

$$\Omega_4 = \Omega_{nom} + 0.5Ș_{lat} \quad (3.22)$$

Where $Ș_{lat}$ is the control action for the roll angle (φ)

Then, the linear open loop transfer functions are:

φ / $Ș_{lat}$ = 2lb Ω_{nom}/ Jx *1/s^2

θ/ $Ș_{lat}$ = 2lb Ω_{nom}/ Jy*1/s^2 (3.23)

ψ / $Ș_{lat}$ = 2lb Ω_{nom}/ Jz*1/s^2

3.6. Circuit Diagram

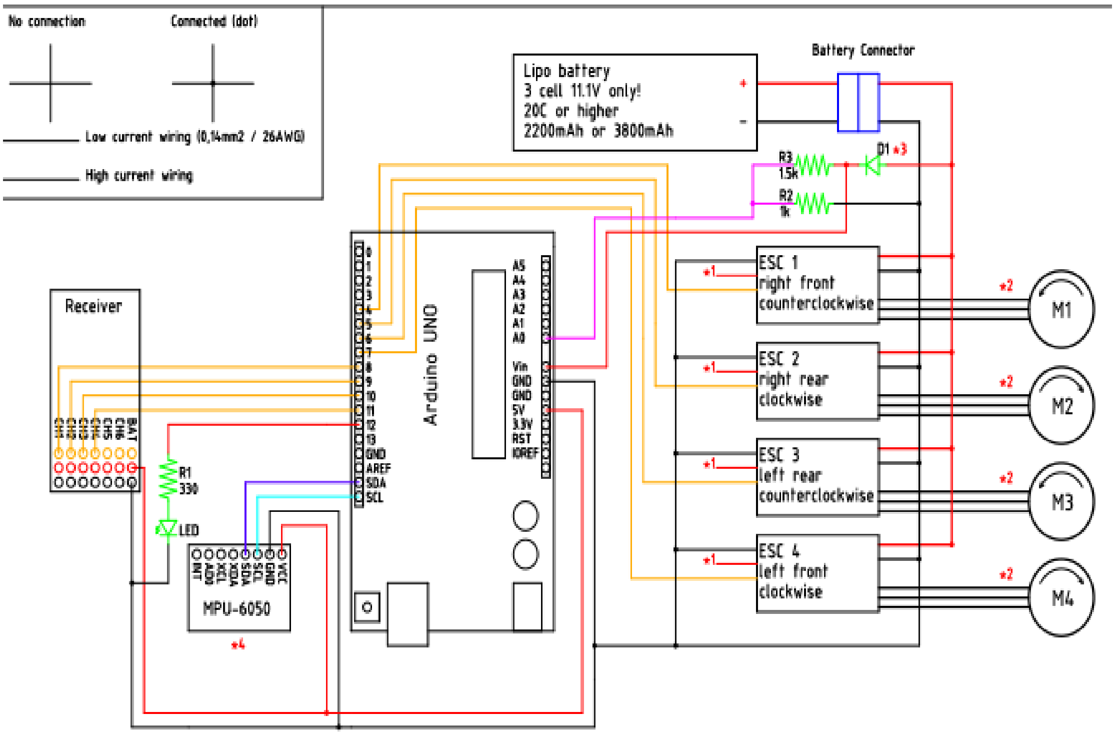

Figure 3.5 Circuit diagram

There are four main components used in the system: brushless motors, Electronic Speed Controllers (ESC)'s, microcontroller and sensor -Inertial Measurement Unit (IMU) module mpu6050-. Motors are acting as the actuators of the system, while IMU module is used to measure the roll angle (φ) and the roll angle rate ($\dot{\varphi}$), while the angular acceleration is obtained analytically using finite difference method. The microcontroller is the brain which processes, analyses, and computes the suitable control action for the data provided by the IMU.

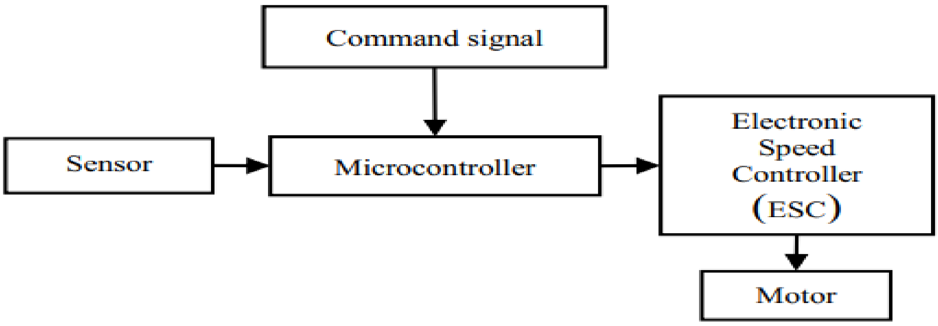

Figure 3.6 Signal network in the system

3.7. Analysis

It is clear that the angular velocity cannot be controlled directly in contrast with PWM signal, thus a relation between the PWM signal and the motor thrust force is required, so it's assumed that $T_i = b * \Omega_i^2 = B * PWM_i$, where PWM is in (Micro sec) and B is the motor constant that relates the motor thrust force with PWM and its value is obtained experimentally, by default we take that data as assumption for our project (see Table 1)

Then equation (3.21, 3.22 and 3.23) can be rewritten respectively as:

$$\varphi / ş_{lat} = lB / Jx * 1/s^2 \tag{3.24}$$

$$PWM_2 = PWM_{nom} - 0.5ş lat$$

Where, PWM_{nom} is estimated for our model as shown in Table 1

Table 3.1 parameters that we are taken

Parameter	description	value	units
PWM_{nom}	Nominal PWM	200	Ms
l	Length b/n the motor center and the model center of gravity	25	Cm
B	Proportional factor b/n motor thrust and PWM	$1.066*10^2$	N/ µs
Jx	Roll inertia	$1,634*10^2$	Kg m^2

3.7.1. Controller design

The controller is designed and implemented in the system in order to minimize the error between the required output and the actual system output. The PD and PD-A control algorithms have been considered and implemented in literature to control the attitude of the model considered. The controller is firstly designed using the linear model (see Fig below),

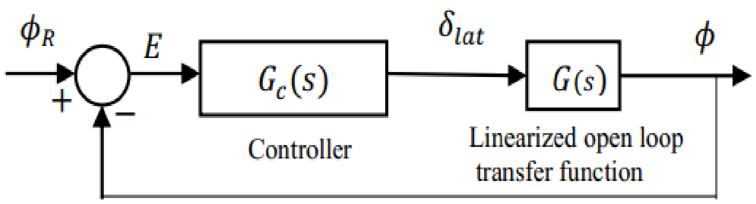

Figure 3.7 Linear model

G(s) is the linearized transfer function of the model considered, then by using data in Table 1, (3.24) can be rewritten as:

$$G(s) = lB \,/\, Jx * 1/s^2 = 25*1.066*10\text{^}{-2}/(1.634*10\text{^}{-2})(\text{N}/\ \mu\text{s*cm/kg.m}^2)$$

$$G(s) = 0.1517/s\text{^}2$$

It is observed from Fig.4 that the error signal is given by:

$$e = \varphi_R - \varphi\ ,\ \dot{e} = \dot{\varphi}_R - \dot{\varphi}\ ,\ \ddot{e} = \ddot{\varphi}_R - \ddot{\varphi}$$

Since it is required to have zero roll angle: $\varphi_R = 0$.

Then, $$e = -\varphi\ ,\ \dot{e} = -\dot{\varphi}\ ,\ \ddot{e} = -\ddot{\varphi} \qquad (3.25)$$

3.7.2. PD and PD-A controllers

The system to be controlled is a one dimensional rotational system. The controller is based on how to control the roll angle(φ) to reach zero degree with the horizontal with the least possible overshoot and the least possible time, in addition to damping out external disturbances so as the system stay as close as possible to zero angle. Two different ways considered to achieve the mentioned goals, the first way is to apply a PD controller on the error signal ($\varphi_R - \varphi$) and the other way is to apply a PD-A controller on the error signal ($\varphi_R - \varphi$). The proportional action is related directly to the error and it is used to decrease the steady state error. The derivative action is used to control the rate of change of the actuating error and provide a correcting action before the system reach a significant error. The accelerator action is used to control the rate of the change of the error rate of change (error acceleration).

- First, PD Controller is applied on the linearized system

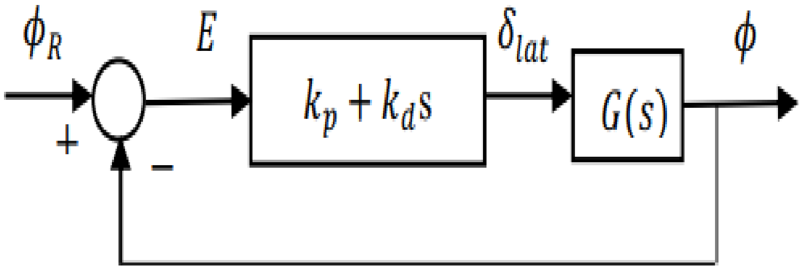

Figure 3.8 Linear model

Control action δ_{lat} is

$$\delta_{lat} = k_p e(t) + k_d \dot{e}(t) \qquad (3.26)$$

Laplace transformation of the equation becomes

$$\delta_{lat}(S) = k_p E(s) + k_d sE(s) \quad = \quad k_p \varphi(s) + k_d s\varphi(s)$$

If we used gains $K_p = 300$ and $K_d = 777$,

Then the controller Transfer function will be:

$$G_{c1}(s) = \delta_{lat}(S)/E(s) = k_p + k_d s = 777(s+0.3861) \qquad (3.27)$$

- Second, PD-A Controller is applied on the linearized system

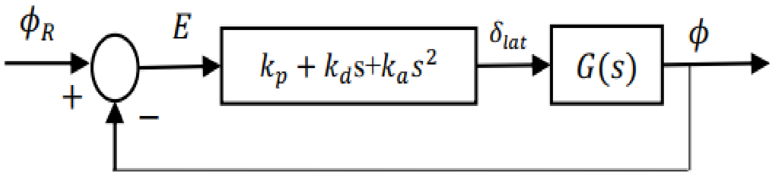

Figure 3.9 PD-A controller in linear model

The control action is:

$$\delta_{lat} = k_p e(t) + k_d \dot{e}(t) + k_a \ddot{e}(t) \qquad (3.28)$$

Applying the same sequence as PD on (3.27) with gains $K_p = 300$ and $K_d = 777$,

300 and $k_a = 60$.

3.8. Simulation circuit

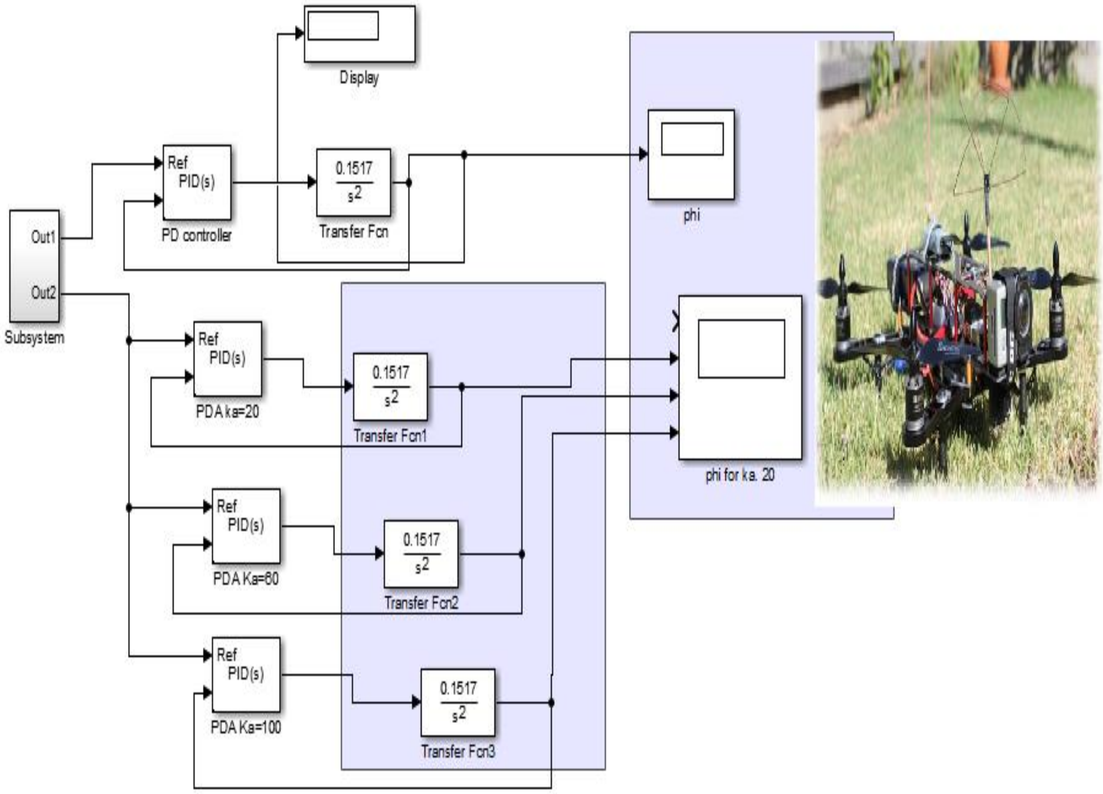

Figure 3.10 Simulink model

CHAPTER FOUR

4. RESULT AND DISCUSSION

The effects of gains K_p, K_d and Ka are showed in Table 2. (Data in the table obtained from theoretical analysis):

Table 4.2 effect of PD-A controller

Closed loop response error	Rise Time	peak overshoot	settling Time	steady state
Increased k_p	decrease	Increase	Small change	decrease
Increased k_d	Small change	decrease	decrease	Small change
Increased k_a	Increase	decrease	Increase	decrease

To clarify the theoretical difference between PD and PD-A controllers, a unit step response of the linearized system using PD controller with K_p = 300 and K_p = 10 (where PD controller is obtained when K_a = 0) and PD-A controller with gains K_p = 300, K_p = 10 and K_a = 20, 60 and 100 is shown in Fig below from Simulink

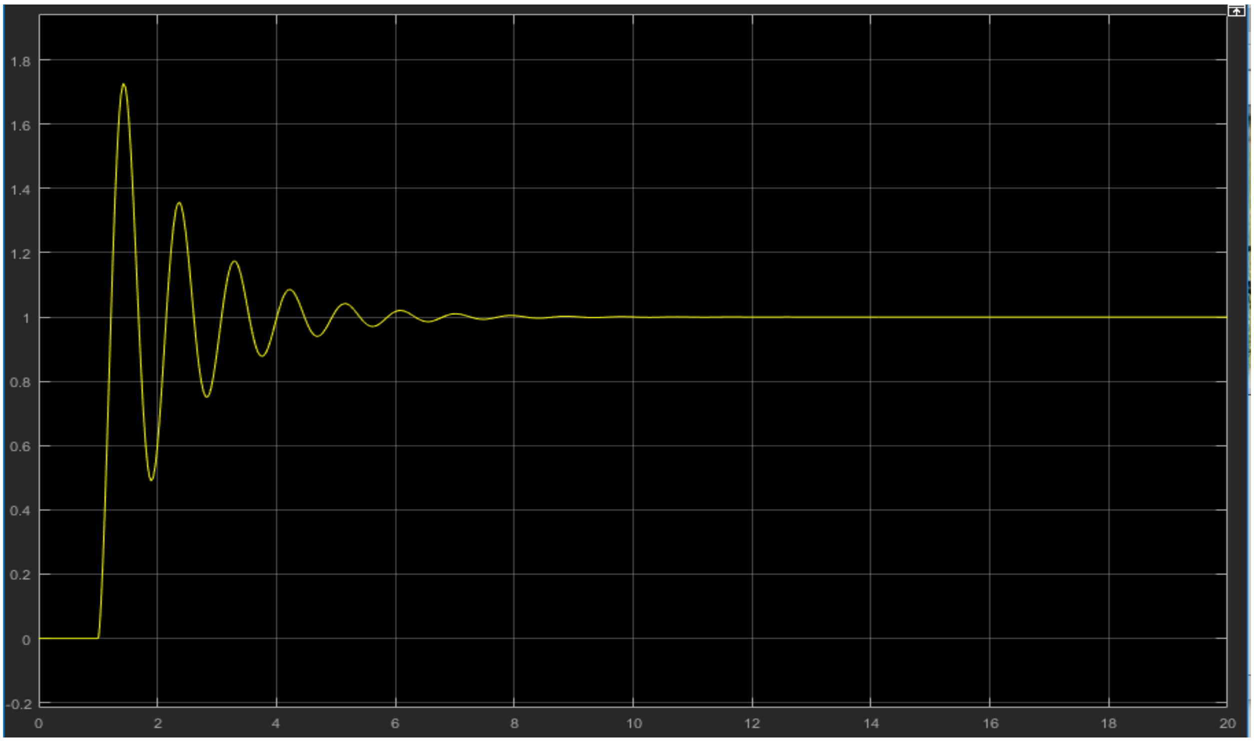

Figure 4.1 Unit step response for PD controller

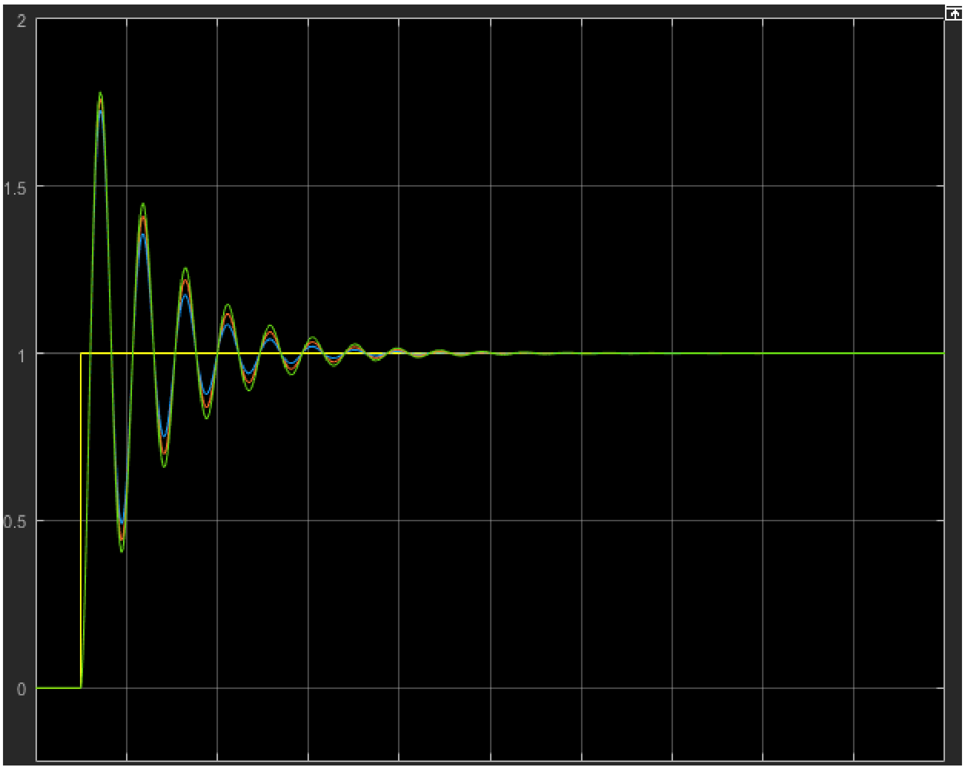

Figure 4.2 Unit step response for PD-A controller

CHAPTER FIVE

5. CONCLUSION AND FUTURE WORK

5.1. Conclusion

In this paper, it is shown that if PD controller is used on a system and the system still has relatively high frequency fluctuations, PD-A will be preferably to be used as it showed theoretically and experimentally that it decreases the frequency and amplitude of fluctuations greatly although it decreases the system speed. So PD-A is very useful in damping the high frequency disturbances that may present in the system effectively, which may form an alternative to filters in some cases. But if the PD could guarantee the desired transient and steady state characteristics, the use of PD-A will be a bad choice as it will decrease the system speed.

5.2. Future Scope of the Thesis

- The Future scope of the setup is to incorporate a more reliable surveillance than that of the present one used. Along with that, the orientation sensors including GPS module for better response
- To increase manoeuvrability of the system by introducing different electromechanical sensors, like magnetometer.
- Using an integrator, comparing the PID-A with PD-A responses and applying these techniques on a full quadcopter. Also improving the Simulink model to represent simulated response time to be closer to reality.

REFERENCES

1. Dhriti Raj Borah, “A review on Quadcopter Surveillance and Control”, ADBU-Journal of Engineering Technology, 4(1), 2016, 116-119
2. Prof.A.V.Javir, Ketan Pawar, Santosh Dhudum, et al., “Design, Analysis and Fabrication of Quadcopter”, Journal of The International Association of Advanced Technology and Science, vol. 16, 2015
3. Ankyda Ji1 and Kamran Turkoglu, “Intelligent Control and Navigation of an Indoor Quad-copter”, IEEE, 2014, 1700-1705.
4. Pooja Srivastava, Tejaswi Ninawe, Chitral Puthran, and Vaishali Nirgude, “Design and Implementation Quadcopter for Rescue Operations”, American Journal of Engineering Research, 5(9), 2016, 130-138. UAV”, IOSR Journal of Mechanical, 13(5), 2016, 73-76
5. www.arduino.cc
6. Samir Bouabdallah, “Design and Control of an Indoor Micro Quadrotor’’ Autonomous Systems Laboratory
7. Stockholm, “Quadrotor control: modeling, nonlinear control design, and simulation”Sweden , master’s degree project June 2015
8. Ingrid Kugelberg, “Black-Box Modeling and Attitude Control of a Quadcopter”, Master of Science Thesis in Electrical Engineering Department of Electrical Engineering, Linköping University, 2016
9. Eswarmurthi Gopalakrishnan, “Quadcopter Flight Mechanics Model And control Algorithms”, Czech Technical University Space Master’s Program, May 2016
10. www.mathwork.org
11. Jeongho Noh* and Yongkyu Song**, “A Simulation Study for Practical Control of a Quadrotor”, Graduate student, Ph.D. program, ** Ph.D., Professor Department of Aerospace and Mechanical Engineering, Korea Aerospace University, Goyang City, South Korea. Orcid ID: 0000-0001-7956-8464

APPENDIX A

a. **Matlab Simulink:**

Introduction to Simulink®

- Block-diagram environment
- Model, simulate, and analyze multidomain systems
- Design, implement, and test:
  - Control systems
  - Signal processing systems
  - Communications systems
  - Other dynamic systems
- Platform for Model-Based Design

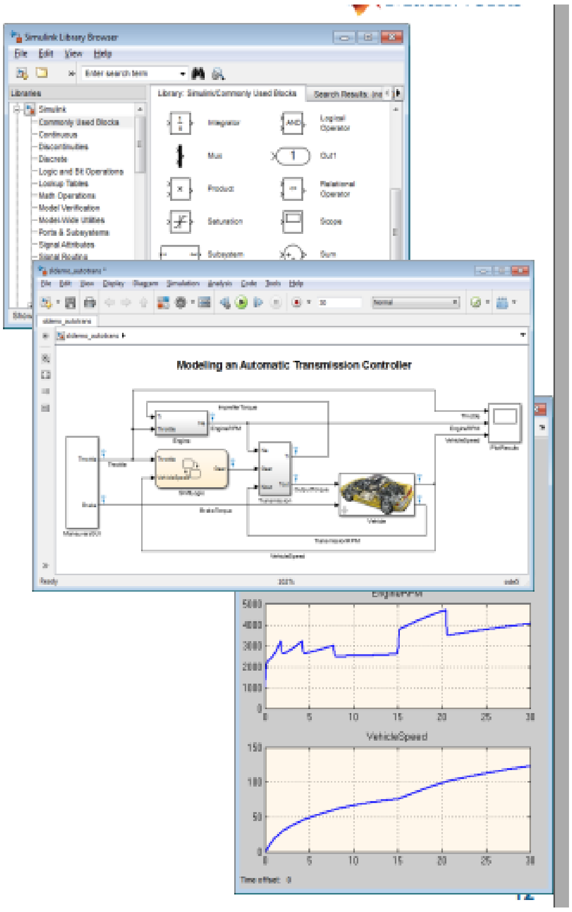

Introduction to Simulink Control Design

- Automatically tune gains of PID controllers
- Rapidly perform advanced linear analysis and control design for plants modeled in Simulink

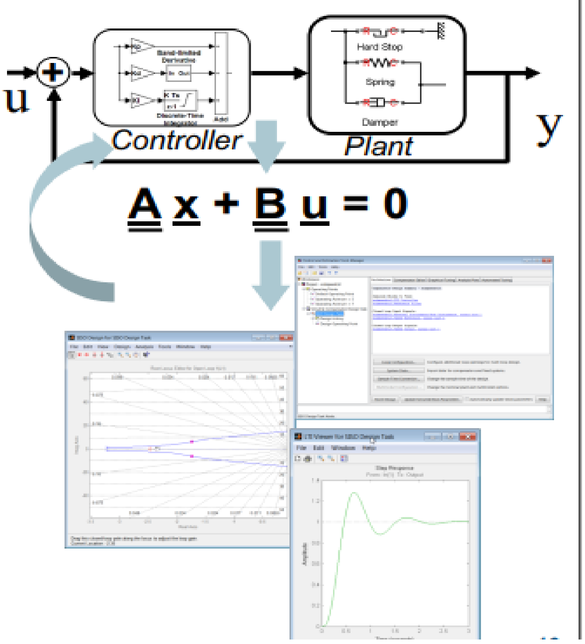

Usage of Embedded Coder

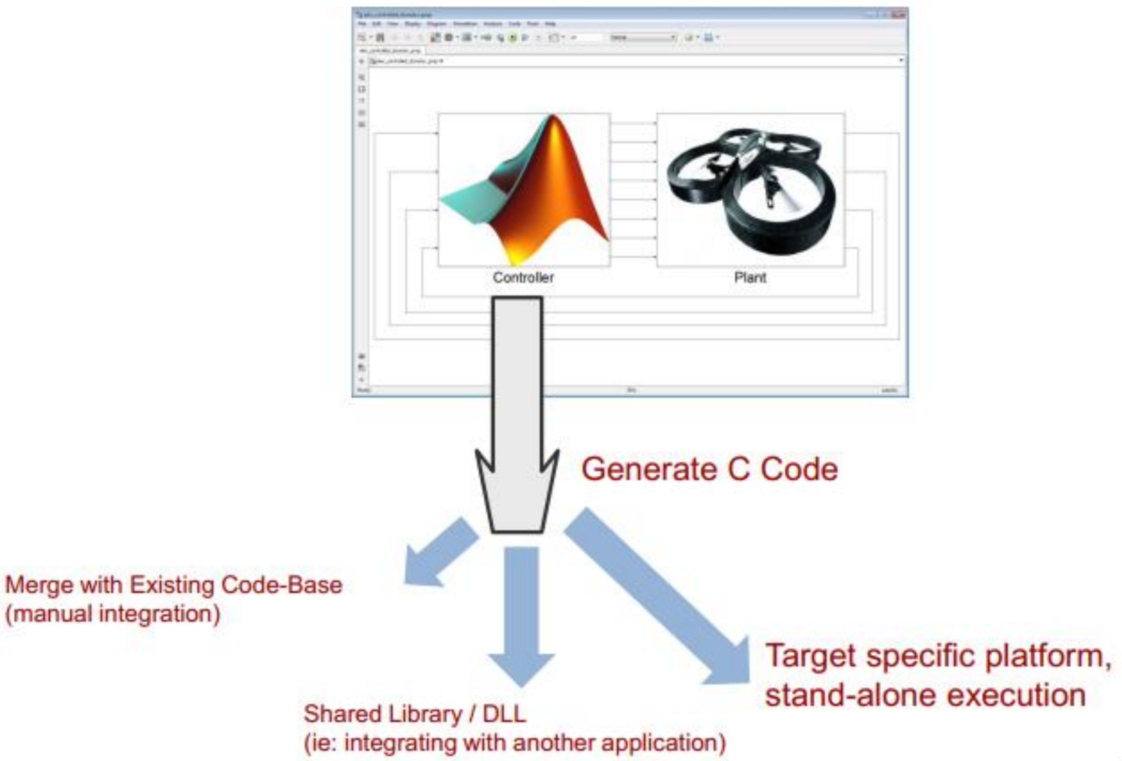

HW connectivity support