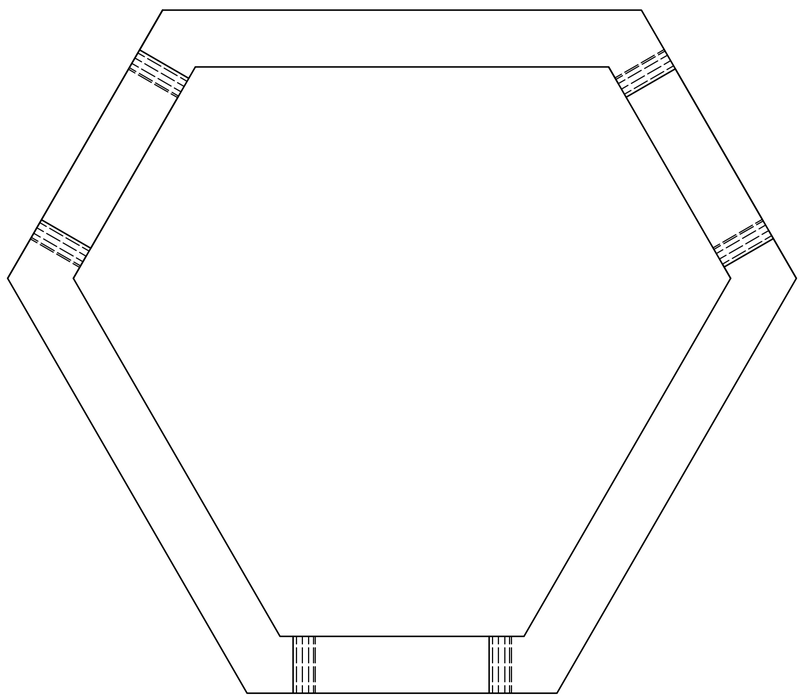

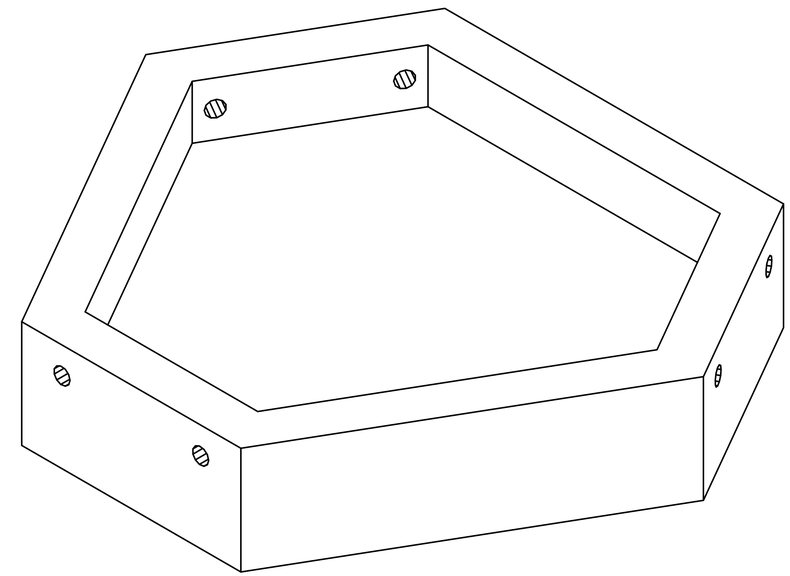

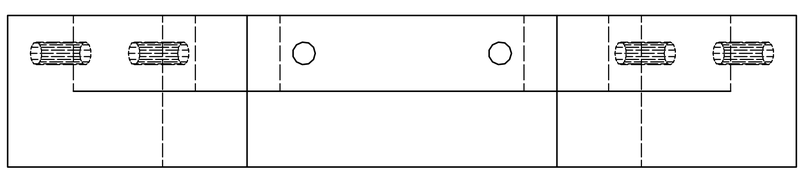

DRAWN Gurkarmjit Kooner	2017-12-07	
CHECKED		TITLE
QA		Stewart Platform
MFG		
APPROVED		SIZE D / DWG NO Stewart_Platform_Original_ / REV Drawing
		SCALE 1 : 1 / SHEET 1 OF 1