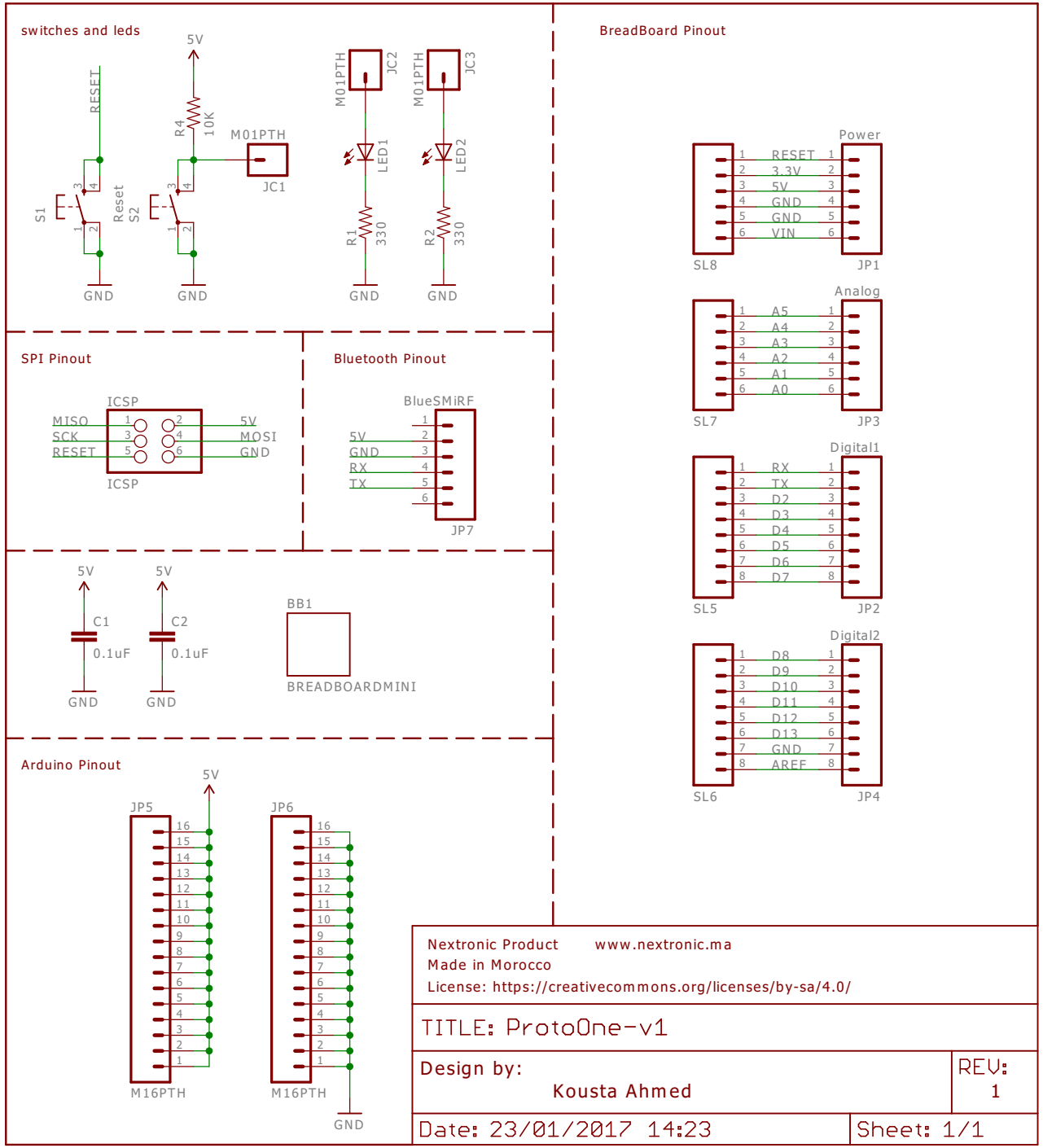
switches and leds
5V
RESET
R4
10K
M01PTH
JC1
S1
Reset
S2
GND
GND
M01PTH
JC2
M01PTH
JC3
LED1
LED2
R1
330
R2
330
GND
GND
BreadBoard Pinout
Power
RESET
3.3V
5V
GND
GND
VIN
SL8
JP1
Analog
A5
A4
A3
A2
A1
A0
SL7
JP3
Digital1
RX
TX
D2
D3
D4
D5
D6
D7
SL5
JP2
Digital2
D8
D9
D10
D11
D12
D13
GND
AREF
SL6
JP4
SPI Pinout
ICSP
MISO
SCK
RESET
5V
MOSI
GND
ICSP
Bluetooth Pinout
BlueSMiRF
5V
GND
RX
TX
JP7
5V
5V
C1
0.1uF
C2
0.1uF
GND
GND
BB1
BREADBOARDMINI
Arduino Pinout
5V
JP5
JP6
M16PTH
M16PTH
GND
Nextronic Product
www.nextronic.ma
Made in Morocco
License: https://creativecommons.org/licenses/by-sa/4.0/
TITLE: ProtoOne-v1
Design by:
Kousta Ahmed
REV:
1
Date: 23/01/2017 14:23
Sheet: 1/1