IoT-Based Human Detection and Smart Security System

The proposed system is an **IoT-enabled human detection and smart security system** designed to detect motion, verify human presence with high accuracy, and allow remote monitoring and control. It integrates sensors, a microcontroller, LEDs, LCD, and Wi-Fi connectivity to form a simple yet scalable security solution, ready for future expansion with cameras, GSM alerts, or alarms.

System Components

- **Microcontroller (ESP32)** – Processes sensor input, controls LEDs, updates LCD, and handles IoT commands.
- **PIR Motion Sensor** – Detects motion in the monitored area.
- **LED Indicators** –
  - **Red LED:** Motion detected
  - **Green LED:** Verified human (95–100% accuracy)
- **LCD Display** – Shows system status ("Idle", "Motion Detected", "Human Verified")
- **IoT Module (Wi-Fi)** – Sends system status to a web/mobile dashboard and receives remote control commands.

Optional future modules: Camera, GSM alerts, alarm which are triggered only after Green LED indicates verified human presence.

System Operation

1. **Motion Detection** – PIR sensor triggers Red LED and LCD shows "Motion Detected".
2. **Human Verification** – Logic verifies if motion is human with 95–100% accuracy:
   - **If verified:** Green LED ON, optional modules (camera, GSM, alarm) triggered.
   - **If not verified:** Green LED stays OFF; system resets automatically.
3. **IoT Remote Monitoring** – Users view system status in real-time via a web/mobile dashboard.
4. **IoT Remote Control** – Users can reset the system, turn it ON/OFF, or trigger alarms remotely.

IoT Remote Monitoring & Control

The IoT module allows the system to be **supervised and managed from anywhere**:

- **Monitoring:** Real-time display of system state, motion events, and human verification.
- **Control:** Remote reset of LEDs and system status, optional future control of alarms or cameras.

This ensures the system is interactive, responsive, and suitable for real-world applications.

Applications

- **Home Security:** Detect intruders and notify homeowners instantly.
- **Office or Commercial Buildings:** Monitor entrances and sensitive areas with minimal manpower.
- **Industrial Sites:** Track human movement in restricted zones for safety compliance.
- **Smart Campus:** Integrate with IoT dashboards for monitoring corridors or labs.
- **Event Security:** Temporary deployment for crowd monitoring and access control.
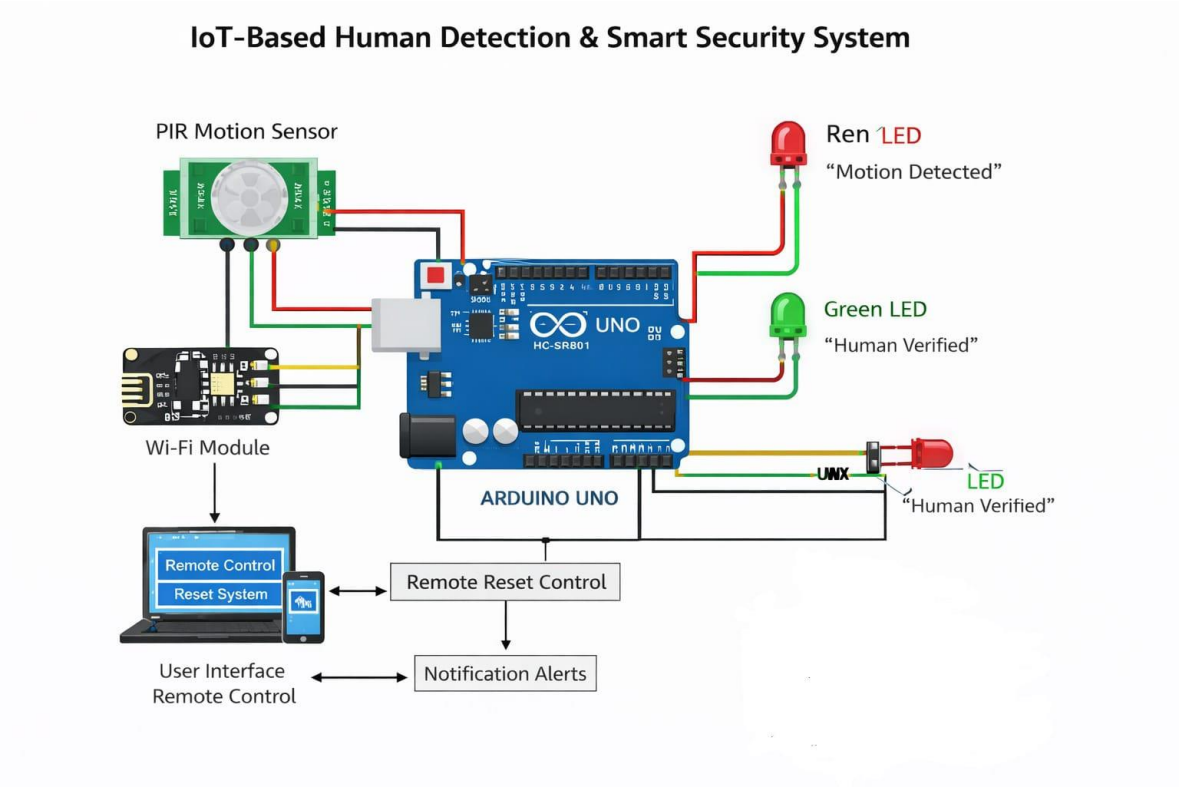
<u>Below is a circuit diagram for the system</u>