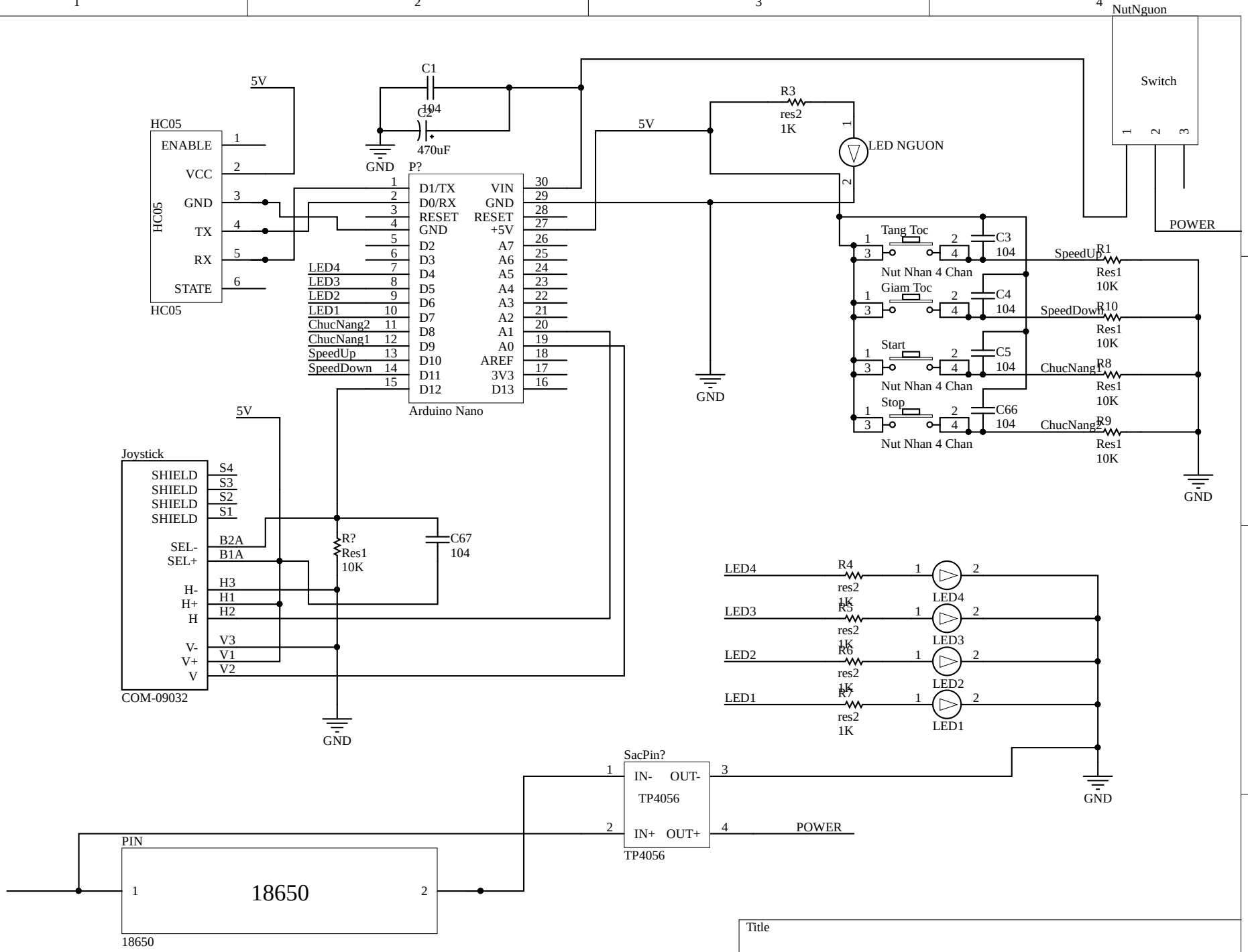

Title		
Size A	Number	Revision
Date: 5/27/2023		Sheet of
File: E:\Nam_3\..\SCH_test.SchDoc		Drawn By: