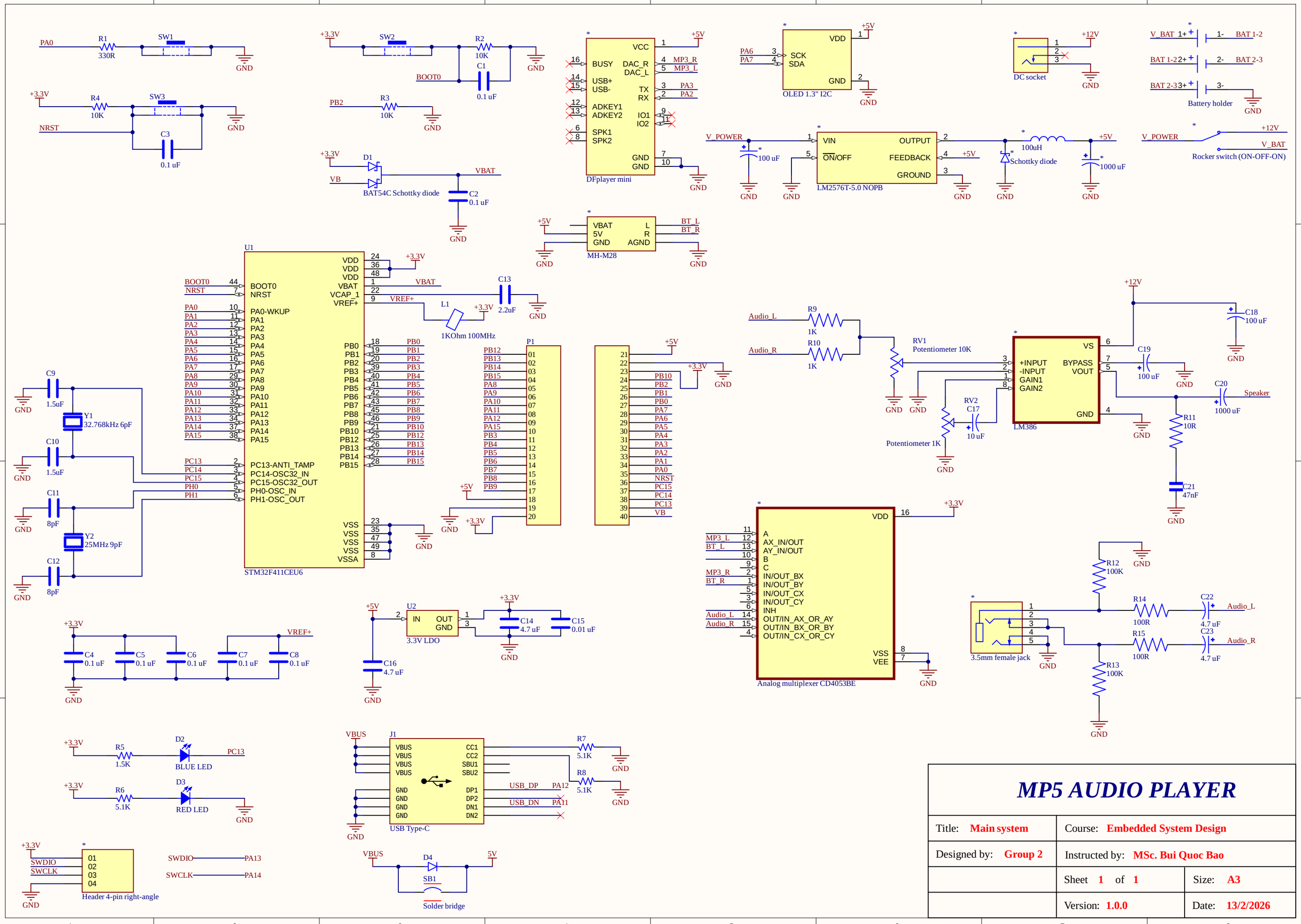

MP5 AUDIO PLAYER

Title: Main system	Course: Embedded System Design	
Designed by: Group 2	Instructed by: MSc. Bui Quoc Bao	
	Sheet 1 of 1	Size: A3
	Version: 1.0.0	Date: 13/2/2026