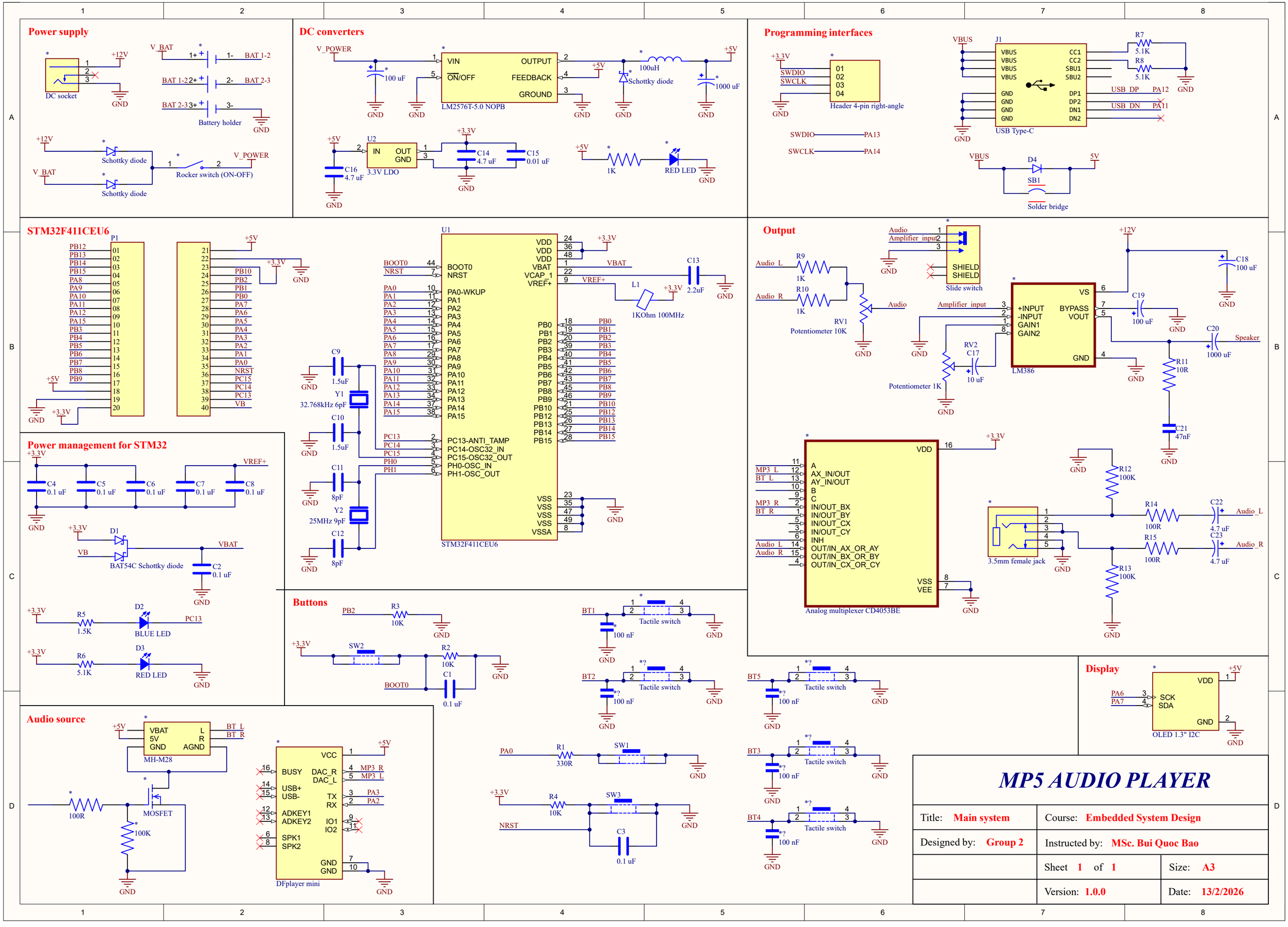
Power supply
DC converters
Programming interfaces
STM32F411CEU6
Output
Power management for STM32
Buttons
Display
Audio source
MP5 AUDIO PLAYER
Title: Main system
Course: Embedded System Design
Designed by: Group 2
Instructed by: MSc. Bui Quoc Bao
Sheet 1 of 1
Size: A3
Version: 1.0.0
Date: 13/2/2026