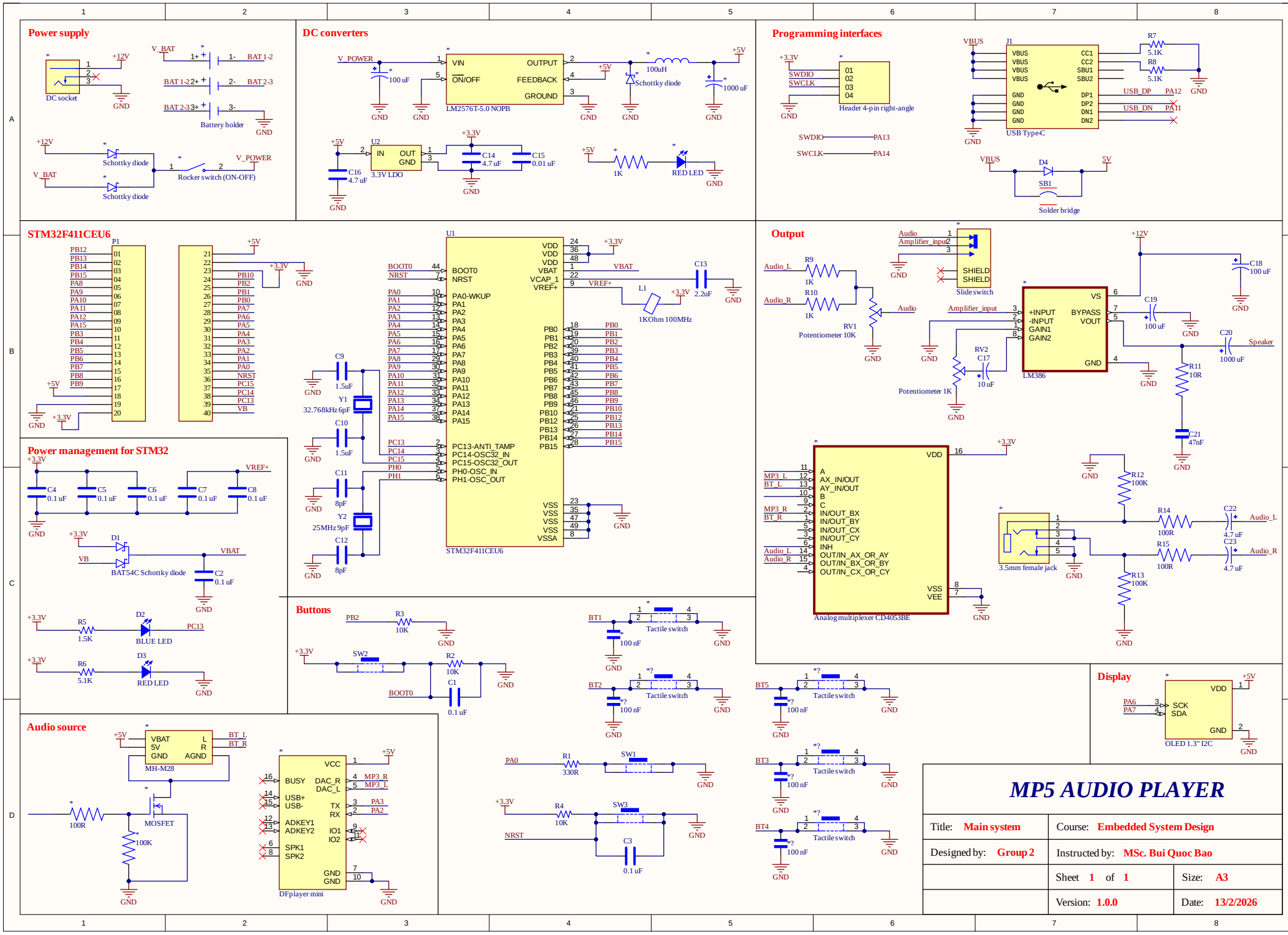
Power supply
DC socket
+12V
GND
V_BAT
BAT 1-2
BAT 1-2
BAT 2-3
BAT 2-3
Battery holder
Schottky diode
Schottky diode
Rocker switch (ON-OFF)
V_POWER
DC converters
V_POWER
100 uF
VIN
ON/OFF
OUTPUT
FEEDBACK
GROUND
LM2576T-5.0 NOPB
100uH
Schottky diode
1000 uF
+5V
U2
IN
OUT
GND
3.3V LDO
C16
4.7 uF
C14
4.7 uF
C15
0.01 uF
+3.3V
1K
RED LED
Programming interfaces
+3.3V
SWDIO
SWCLK
Header 4-pin right-angle
SWDIO
SWCLK
PA13
PA14
J1
VBUS
CC1
CC2
SBU1
SBU2
DP1
DP2
DN1
DN2
USB Type-C
R7
5.1K
R8
5.1K
USB_DP
USB_DN
PA12
PA11
D4
SB1
Solder bridge
5V
STM32F411CEU6
P1
PB12
PB13
PB14
PB15
PA8
PA9
PA10
PA11
PA12
PA15
PB3
PB4
PB5
PB6
PB7
PB8
PB9
PB10
PB2
PB1
PB0
PA7
PA6
PA5
PA4
PA3
PA2
PA1
PA0
NRST
PC15
PC14
PC13
VB
U1
BOOT0
NRST
PA0-WKUP
PA1
PA2
PA3
PA4
PA5
PA6
PA7
PA8
PA9
PA10
PA11
PA12
PA13
PA14
PA15
PC13-ANTI_TAMP
PC14-OSC32_IN
PC15-OSC32_OUT
PH0-OSC_IN
PH1-OSC_OUT
VDD
VBAT
VCAP_1
VREF+
VSS
VSSA
C13
2.2uF
L1
1KOhm 100MHz
C9
1.5uF
Y1
32.768kHz 6pF
C10
1.5uF
C11
8pF
Y2
25MHz 9pF
C12
8pF
Power management for STM32
C4
0.1 uF
C5
0.1 uF
C6
0.1 uF
C7
0.1 uF
C8
0.1 uF
VREF+
D1
BAT54C Schottky diode
VBAT
C2
0.1 uF
R5
1.5K
D2
BLUE LED
PC13
R6
5.1K
D3
RED LED
Buttons
PB2
R3
10K
SW2
R2
10K
C1
0.1 uF
BOOT0
BT1
BT2
BT3
BT4
BT5
Tactile switch
100 nF
PA0
R1
330R
SW1
R4
10K
SW3
NRST
C3
0.1 uF
Audio source
VBAT
5V
GND
L
R
AGND
MH-M28
BT_L
BT_R
100R
MOSFET
100K
BUSY
USB+
USB-
ADKEY1
ADKEY2
SPK1
SPK2
VCC
DAC_R
DAC_L
TX
RX
IO1
IO2
MP3_R
MP3_L
PA3
PA2
DFplayer mini
Output
Audio
Amplifier_input
Slide switch
SHIELD
SHIELD
Audio_L
Audio_R
R9
1K
R10
1K
RV1
Potentiometer 10K
Audio
Amplifier_input
+INPUT
-INPUT
GAIN1
GAIN2
VS
BYPASS
VOUT
GND
LM386
C18
100 uF
C19
100 uF
C20
1000 uF
Speaker
R11
10R
C21
47nF
RV2
Potentiometer 1K
C17
10 uF
Analog multiplexer CD4053BE
A
AX_IN/OUT
AY_IN/OUT
B
C
IN/OUT_BX
IN/OUT_BY
IN/OUT_CX
IN/OUT_CY
INH
OUT/IN_AX_OR_AY
OUT/IN_BX_OR_BY
OUT/IN_CX_OR_CY
VSS
VEE
MP3_L
BT_L
MP3_R
BT_R
R12
100K
R13
100K
R14
100R
R15
100R
C22
4.7 uF
C23
4.7 uF
3.5mm female jack
Display
VDD
SCK
SDA
GND
OLED 1.3" I2C
PA6
PA7
MP5 AUDIO PLAYER
Title: Main system
Course: Embedded System Design
Designed by: Group 2
Instructed by: MSc. Bui Quoc Bao
Sheet 1 of 1
Size: A3
Version: 1.0.0
Date: 13/2/2026

Board Stack Report