REVISIONS			
REV	DESCRIPTION	DATE	APPROVED
A	INITIAL RELEASE.	1/25/2021	E. KRAUSS

NOTES:

1. MATERIAL PROCESSING
   A. ALL THREADED INSERTS (HELICOILS) TO BE INSTALLED BY BCT.
2. PART MARKING
   A. ENGRAVE TEXT AND NUMBERING AS SHOWN USING 0.1 HIGH FONT IN APPROXIMATE AREA. MAX DEPTH 0.005 WITH 60 DEG ENGRAVING TOOL.
3. SURFACE TREATMENT
   A. CHROMATE CONVERSION COAT ENTIRE PART PER MIL-DTL-5541F, TYPE II, CLASS 3.
4. INSPECTION
   A. BCT INSPECTION OF ALL DIMENSIONS ANNOTATED WITH AN OVAL IS REQUIRED.

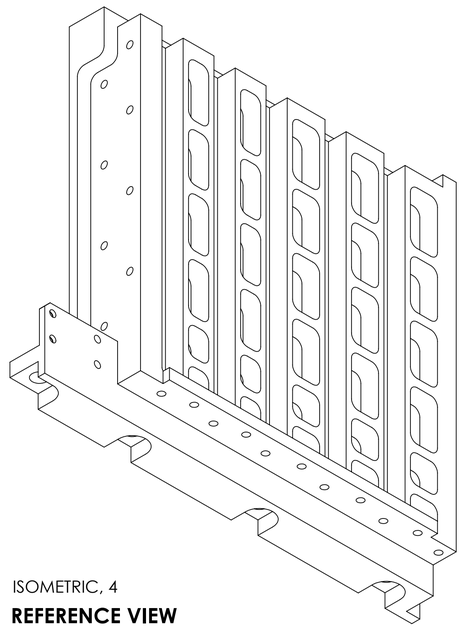

ISOMETRIC, 4
REFERENCE VIEW

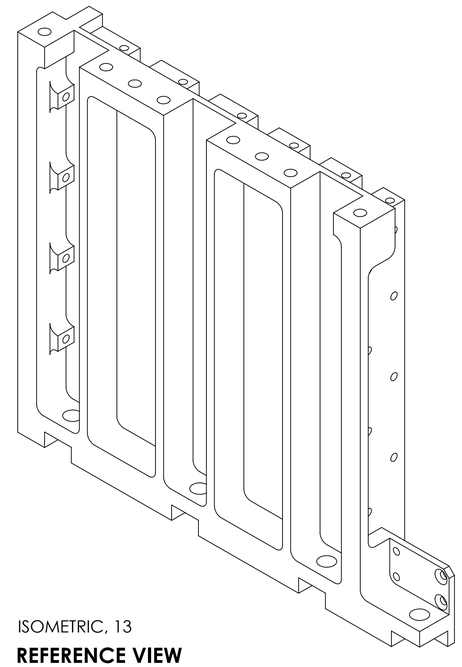

ISOMETRIC, 13
REFERENCE VIEW

[redacted]

INTERPRET DRAWING PER ASME Y14.5M-1994
THIS IS AN UNDIMENSIONED CAD DRAWING
UNLESS OTHERWISE SPECIFIED: ALL SURFACES
ARE 125 MICRO-INCH OR BETTER @ TOLERANCE IS +.005/-.001
CLEAN ANGLE FLUSH/SMOOTH
MACHINE ALL SURFACES TO A 63 MICRONCH FINISH OR BETTER
FILLETS .015 MAX .003 MIN. BREAK ALL EDGES
ALL DIMENSIONS ARE IN INCHES

.XX ± .01
.XXX ± .005
ANGLES ± .50°
DO NOT SCALE DRAWING

[redacted]

KEU, Housing, -X

[redacted]		DOCUMENT NUMBER 15PRT4817-20
TRACEABILITY REQUIRED [redacted]	MATERIAL AL 6061-T6	NEXT ASSY 15ASM4817

PDM MODEL REVISION	SIZE	SCALE	SHEET	REV
A-47	D	1:1	1 OF 2	A

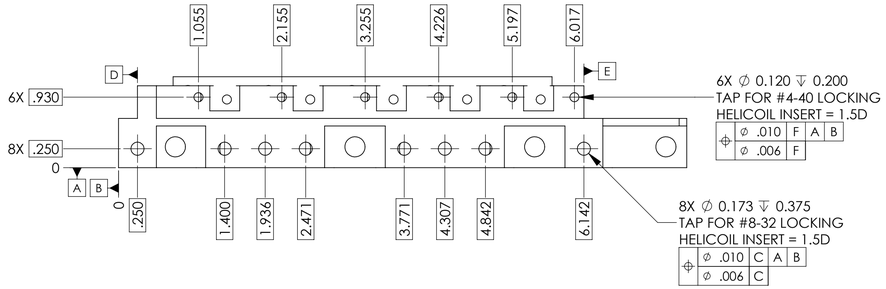

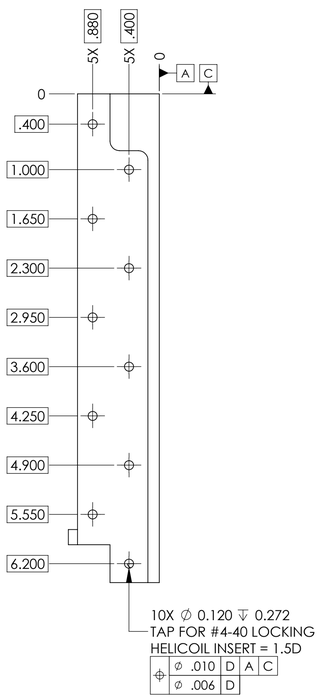

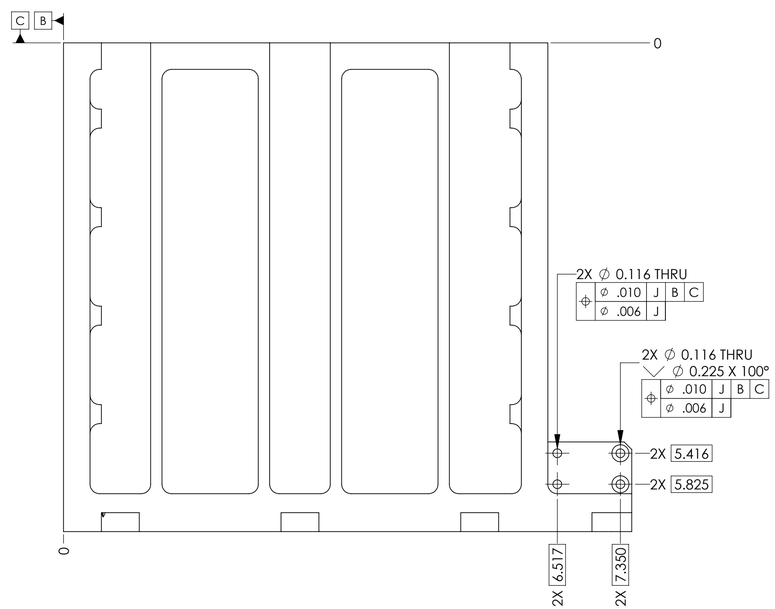

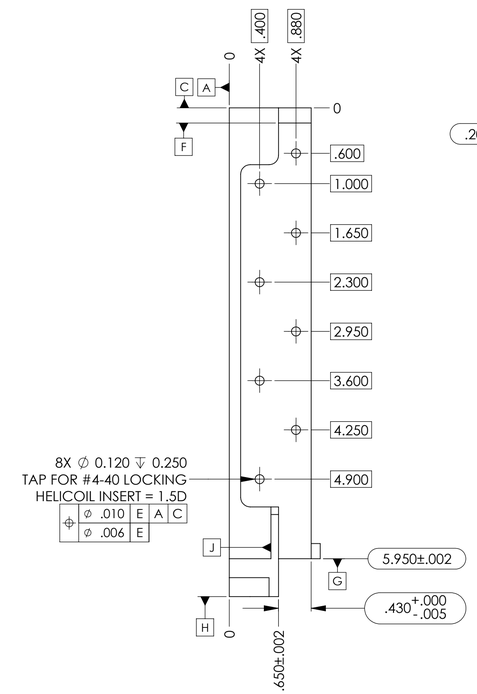

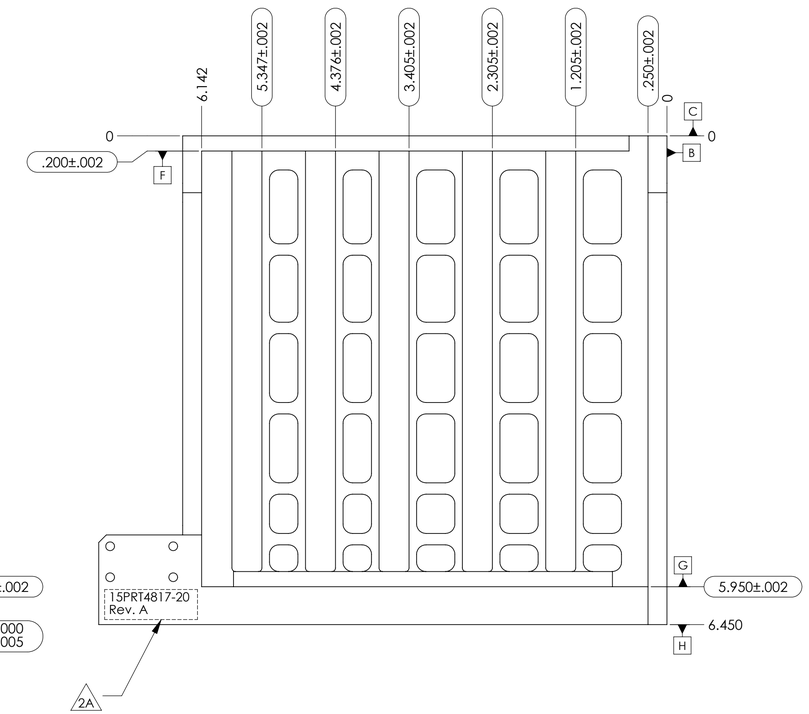

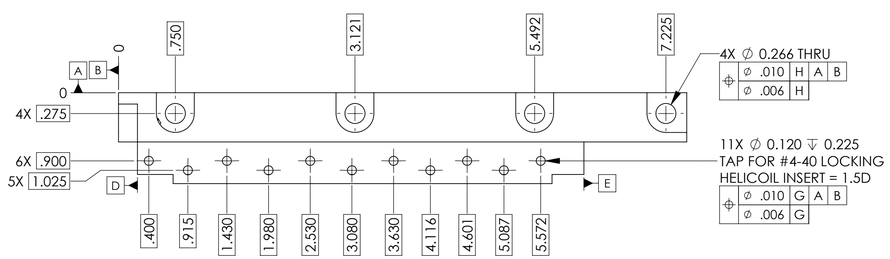

[redacted]

[redacted]

KEU, Housing, -X				
DOCUMENT NUMBER	SIZE	SCALE	SHEET	REV
15PRT4817-20	D	1:1	2 OF 2	A