| DWG NO | SHT | REV |
|---|---|---|
| 49258014 | 1 | B |

| PART NUMBER |
|---|
| 49258014-1 |

| REVISIONS | | | | |
|---|---|---|---|---|
| ZONE | REV | DESCRIPTION | DATE | APPROVED |
| | B | INCORP NOR 2B | 17-JAN-2018 | TLM |

CAD MAINTAINED. CHANGES SHALL BE INCORPORATED BY THE DESIGN ACTIVITY.

ALL SHEETS AT REVISION B

NOTES:

1. INTERPRET DRAWING PER ASME Y14.100M.
2. DIMENSIONS AND TOLERANCES PER ASME Y14.5M-1994.
3. REMOVE ALL BURRS AND SHARP EDGES .010 MAX.
4. FINISH PER MIL-STD-171, FINISH 7.3.3.
5. LEGIBLY AND PERMANENTLY MARK THE FOLLOWING IN .09 - .25 HIGH CHARACTERS IN APPROXIMATE AREA SHOWN, USING AA56032-2-BLK PER A-A-56032 (EPOXY INK), IN ACCORDANCE WITH MIL-STD-130:
   "5U755-49258014-1"
   "MFR-[XXXXX]"
   MFR = MANUFACTURER'S CAGE CODE WHEN THE PART IS MANUFACTURED BY OTHER THAN THE DESIGN ACTIVITY.
6. MATERIAL: ALUMINUM ALLOY, 6061-T651 PER AMS-QQ-A-250/11,
   OR
   ALUMINUM ALLOY, 6061-T651 PER AMS-QQ-A-200/8, AMS 4173 OR ASTM-B221.
7. ALL MACHINED SURFACES TO BE 125 UNLESS OTHERWISE SPECIFIED.
8. IT IS PERMISSIBLE TO MAKE THE PART FROM EXISTING STOCK PART 49046153-3

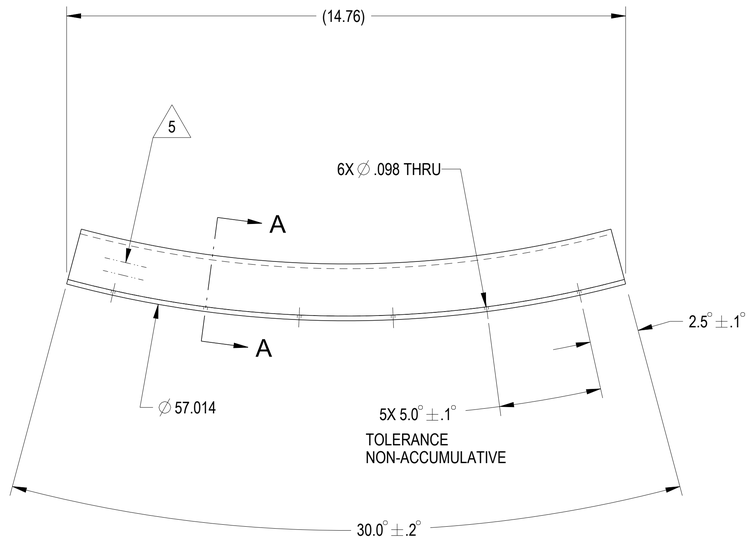


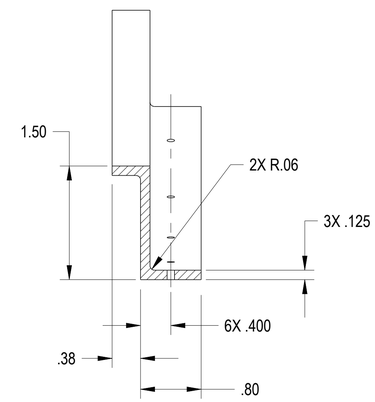


SECTION A-A
SCALE 1/1
ROTATED 7.5° CW

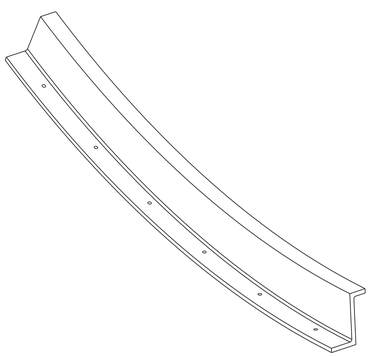

REFERENCE VIEW

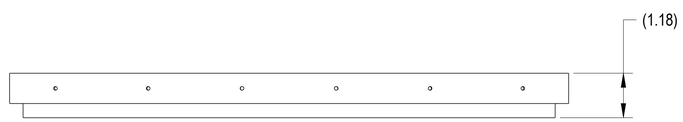


49258014-1

NO SERIALIZATION REQUIRED

UNLESS OTHERWISE SPECIFIED:
DIMENSIONS ARE IN INCHES
TOLERANCES ARE:
FRACTIONS | DECIMALS .XX ± 0.02 .XXX ± 0.010 | ANGLES ±0.5°

DO NOT SCALE DRAWING

THIRD ANGLE PROJECTION

| Drawing Version | Drawing Modified |
|---|---|
| B.3 | NO |
| Object Version | Object Modified |
| B.2 | NO |

MATERIAL

| APPROVALS | | DATE |
|---|---|---|
| IPT LEAD | R. GITHENS | - |
| CHIEF PROGRAM ENGINEER | C. SIKES | - |
| FUNCTIONAL MANAGER | - | - |
| PROCESS ENGINEER | J. BRADLEY | - |
| MISSION ASSURANCE | - | - |

-- ELECTRONICALLY SIGNED VIA PDM+ --

CONTRACT NO. F04701-00-D-0208-0006

| APPROVALS | | DATE |
|---|---|---|
| ORIGINATOR | C. YUAN | 071023 |
| PEER REVIEWER | R. GITHENS | - |
| QUALITY ASSURANCE | - | - |
| STRESS | P. DURANTE | - |

[redacted]

Z-CHANNEL,
SUBSCALE TEST, ISOS

| SIZE | CAGE CODE | DWG NO | REV |
|---|---|---|---|
| D | 5U755 | 49258014 | B |

SCALE 1/2 | WEIGHT: 1.34 lbs. REF | SHEET 1 OF 1

[redacted]

Creo A/RD-CA-D.frm