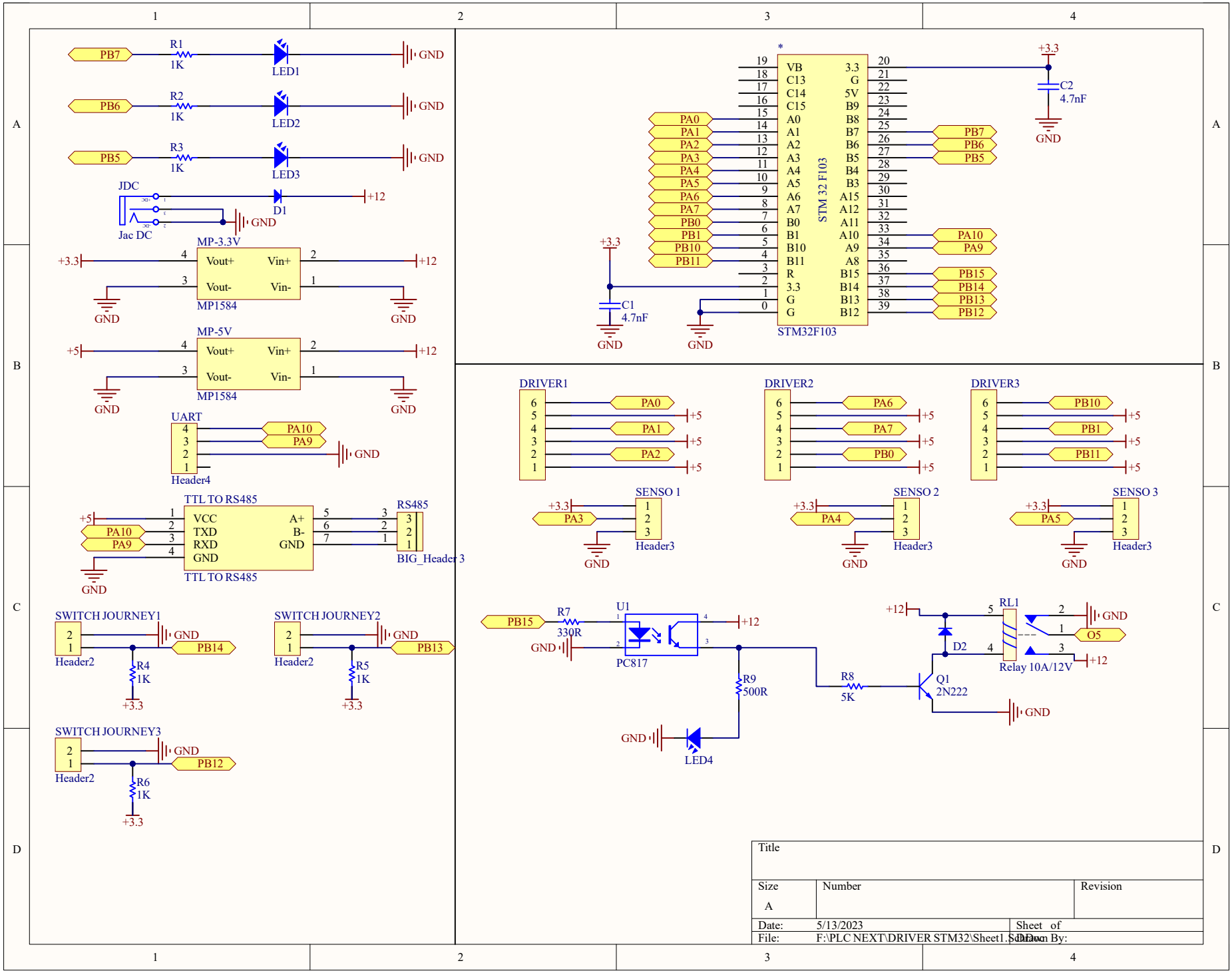

Title		
Size A	Number	Revision
Date: 5/13/2023	Sheet of	
File: F:\PLC NEXT\DRIVER STM32\Sheet1.SchDoc	Drawn By:	