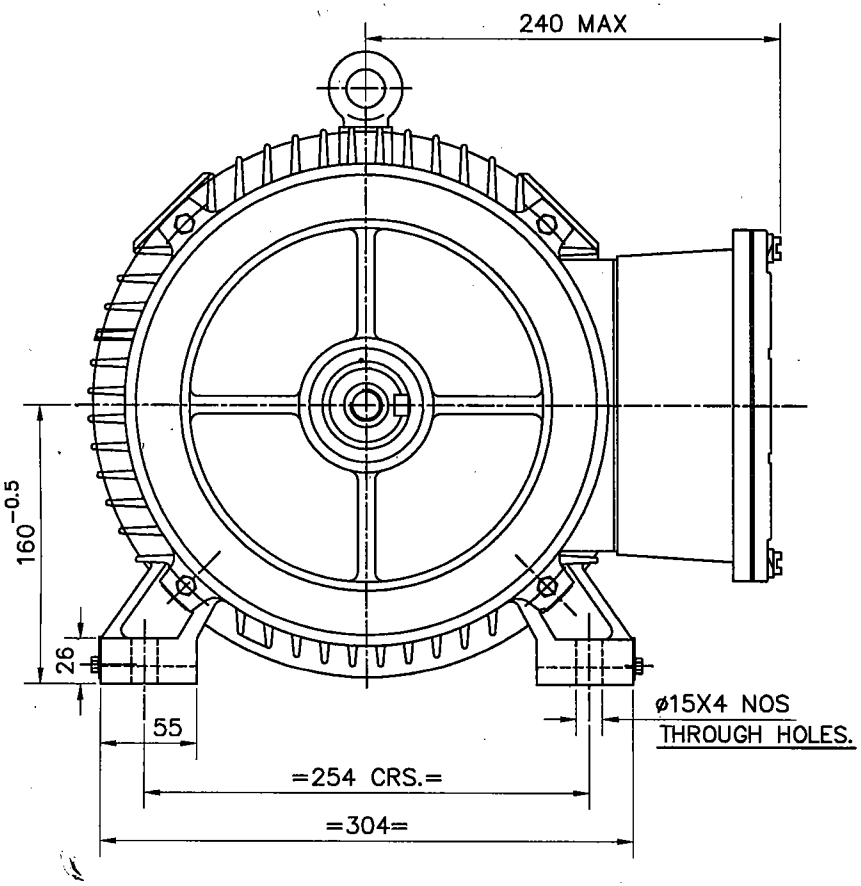

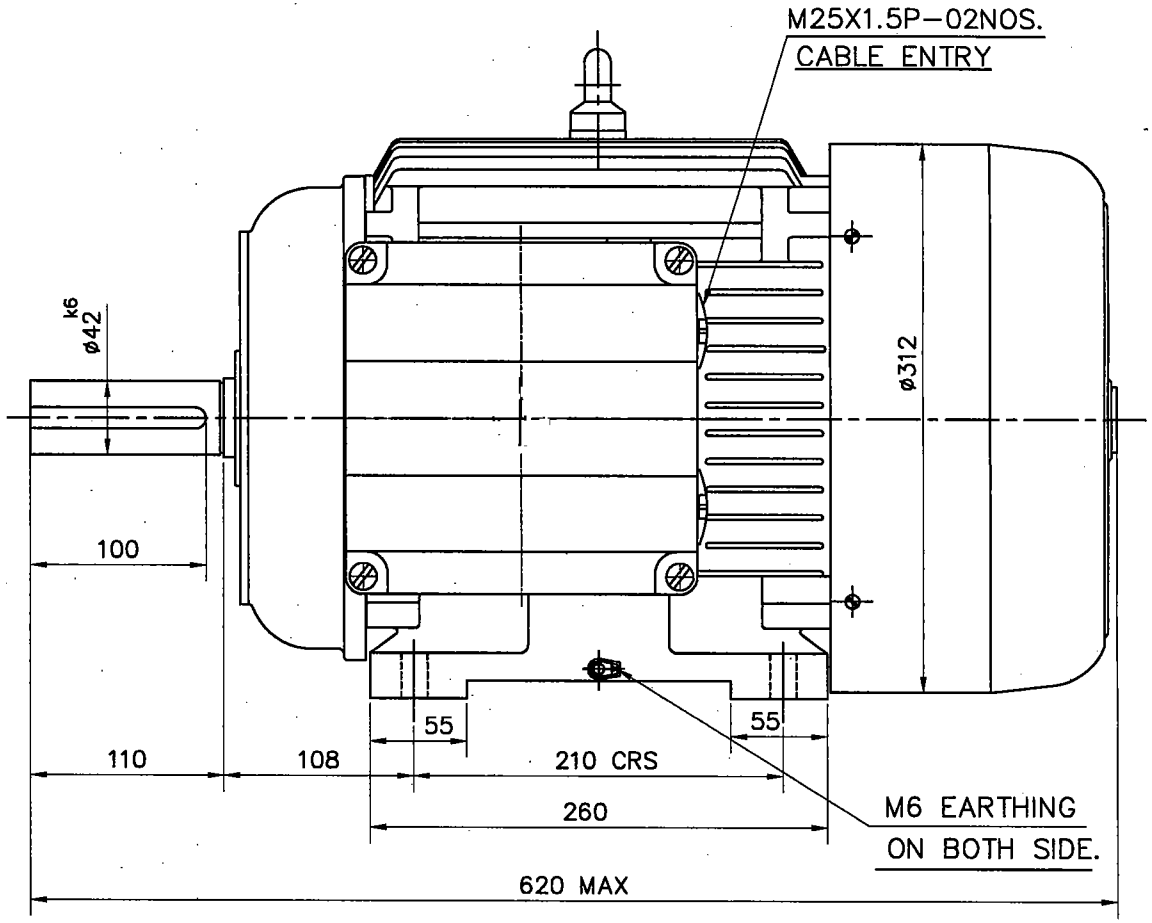

SPECIFICATION:-

kW/HP	15/20
POLE	2
BEARING DE SIDE	6309.ZZ
BEARING NDE SIDE	6209.ZZ

MATERIAL OF CONSTRUCTION:-

FRAME	CAST IRON
END COVER (DE)	CAST IRON
END COVER (NDE)	CAST IRON
T. BOX	CAST IRON
T. BOX COVER	CAST IRON
SHAFT	CARBON STEEL

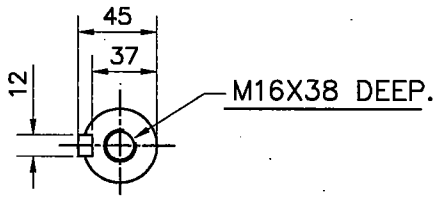

SHAFT END DETAIL

REV. NO.	DETAIL OF CHANGE	DATE.	INTL.
2			
1			

UNMENTIONED TOLERANCES ARE AS PER IS:2102-1/ ISO 2768-1

LINEAR DIMNS.	OVER & UPTO	0.5-3	3-6	6-30	30-120	120-400	400-1000	1000-2000
	TOLERANCE	±0.2	±0.3	±0.5	±0.8	±1.2	±2	±3

ANGULAR DIMNS.	PERMISSIBLE DEVIATIONS FOR LENGTHS OF THE SHORTER SIDE OF THE ANGLE.				
OVER & UPTO	0-10	10-50	50-120	120-400	400.....
TOLERANCE	±1°	±0°30'	±0°20'	±0°10'	±0°5'

TITLE

GENERAL ARRANGEMENT DRG. FOR

160 M FRAME FOOT MOUNTED MOTOR

	NAME.	DATE.
DGN.		
DRN.	SAP	
CHD.		
APPD.		

SCALE :--1:1

SHEET NO:- 01 OF 01

DRG. NO. *MGAN160A0253*

UNLESS OTHERWISE SPECIFIED ALL DIMNS. ARE IN MM.

ISSUE NO. 01 REV.NO. 00