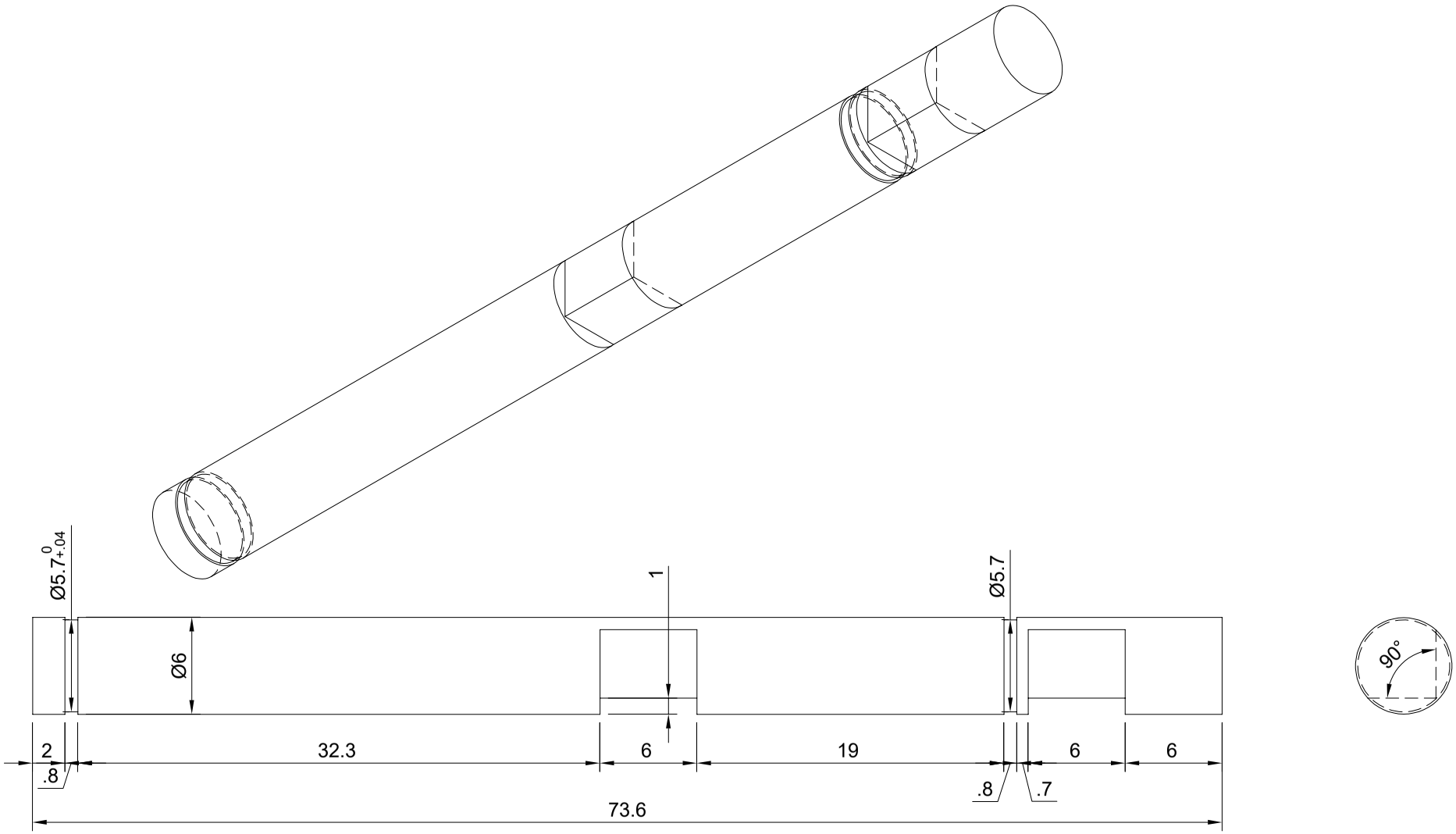

Notes Scale:1/4 Linear tolerance: +/-0.12mm **All measuremnts in milimeters** Quantity 2	Material 1045 Carbon Steel	
	Title Wheel Shaft	
	Created by Nicolas Arisi-Fernandez	Date 12/28/2023
	Abington Senior High School Engineering Team	