This article has been accepted for publication in IEEE Transactions on Power Electronics. This is the author's version which has not been fully edited and content may change prior to final publication. Citation information: DOI 10.1109/TPEL.2026.3675006

Plenty of Room at the Bottom and Top: Future Perspectives on GaN Power Devices and Applications

Zineng Yang, *Student Member, IEEE,* Xin Yang, *Student Member, IEEE*, Jingcun Liu, Hongchang Cui, *Student Member, IEEE,* Kuokchi Lei, Yujun Guo, Teng Gao, Philip Chan, Ling Xia, Han Wang, *Senior Member, IEEE,* Florin Udrea, Dong Dong, *Senior Member, IEEE,* Qiang Li, *Senior Member, IEEE,* Yuhao Zhang, *Senior Member, IEEE*

***Abstract* – GaN power devices have achieved commercial success primarily in the 30–900 V range, particularly in consumer electronics. Yet, to borrow from Richard Feynman's famous remark, there remains plenty of room at both the "bottom" and the "top"— not only in voltage classes, with opportunities at both lower and higher ends, but also in integration scale, spanning from fundamental device architectures to monolithic integration. This paper explores the untapped potential of GaN power technology across these domains, beginning with both ends of the voltage spectrum: low-voltage (<30–50 V) and high-voltage (>1 kV) applications. We highlight emerging GaN device structures under industrial development, analyze their performance limits, and examine transformative GaN applications enabled by these devices, including AI processor power delivery, humanoid robotics, light detection and ranging (LiDAR), electric vehicles (EVs), electric vertical take-off and landing (eVTOL) aircraft, MVDC power supplies, and solid-state circuit breakers. Beyond voltage scaling, we explore the promise of monolithic bidirectional GaN switches for various AC power conversion applications, and evaluate GaN's applicability in cryogenic and high-temperature environments for quantum and aerospace systems. Finally, we discuss packaging advances essential to supporting these device capabilities. This work provides a comprehensive perspective on extending the frontier of GaN power electronics and coordinating progress in devices and circuits for next-generation applications.[1]**

***Index Terms* – Power electronics, power semiconductor devices, gallium nitride, AI processor power delivery, robotics, LiDAR, electric vehicles, monolithic bidirectional switch, cryogenic temperatures, high temperatures, packaging.**

I. Introduction

In the past decade, the gallium nitride (GaN) high-electron-mobility transistor (HEMT) has emerged as a mainstream power device, particularly within the 30–900 V range [1]. GaN HEMTs have been widely commercialized in applications such as fast chargers, consumer electronics, and increasingly in industrial and automotive systems, with a global market size exceeding USD$1.1 billion [2] and projected to reach $2 billion by 2027 [3]. This success stems largely from GaN's superior material properties—high electron mobility, wide bandgap, and high critical electric field—which collectively enable substantial improvements in switching frequency, efficiency, power density, and converter form factor.

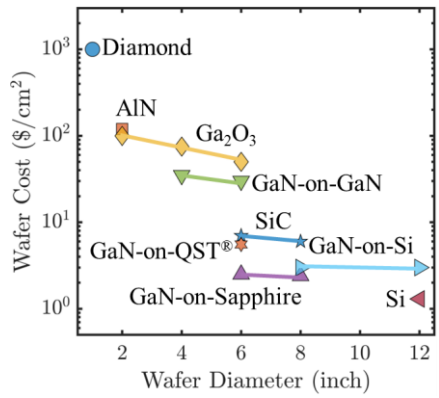

Fig. 1: Estimated unit-area wafer cost versus wafer diameter for major power semiconductor technologies.

In addition to performance, GaN also offers significant advantages in manufacturing and cost. As shown in Fig. 1, GaN-on-Si and GaN-on-sapphire substrates support large wafer diameters (up to 12-inch and 8-inch, respectively), with the lowest unit-area material cost among wide-bandgap and ultra-wide-bandgap semiconductors [1], [4].

Yet, despite these achievements, the full potential of GaN remains far from fully realized. Adapting Richard Feynman's famous remark—"there's plenty of room at the bottom"—recent advances in GaN power electronics suggest there is now "plenty of room at both the bottom and the top," whether in terms of voltage classes or integration scale. This forward-looking perspective paper highlights not only opportunities for extending GaN devices into lower and higher voltage domains, but also the broader landscape of innovation, from fundamental device design to monolithic integration and new circuit topologies.

[1]Zineng Yang and Xin Yang contributed equally to this work. Corresponding Author: Yuhao Zhang.

Zineng Yang, Xin Yang, Hongchang Cui, Yujun Guo, Han Wang, and Yuhao Zhang are with the Department of Electrical and Electronic Engineering, the University of Hong Kong, Hong Kong SAR, China (e-mail: yuhzhang@hku.hk).

Jingcun Liu is with Infineon Technologies, Chandler, AZ 85286 USA (e-mail: Jingcun.Liu@infineon.com).

Kuokchi Lei is with the Department of Electronic Engineering, Tsinghua University, Beijing 100084, China.

Teng Gao, Phillip Chan, and Ling Xia are with the Hong Kong Microelectronics Research and Development Institute (MRDI), Hong Kong SAR, China (email: teng.gao@mrdi.org.hk)

Florin Udrea is with Department of Engineering, University of Cambridge, Cambridge, Cambridge CB2 1PZ UK. (e-mail: fu10000@cam.ac.uk).

Dong Dong and Qiang Li are with the Center for Power Electronics Systems (CPES), Virginia Polytechnic Institute and State University, Blacksburg, VA 24060 USA (e-mail: dongd@vt.edu, lqvt@vt.edu).

This work is licensed under a Creative Commons Attribution 4.0 License. For more information, see https://creativecommons.org/licenses/by/4.0/

This article has been accepted for publication in IEEE Transactions on Power Electronics. This is the author's version which has not been fully edited and content may change prior to final publication. Citation information: DOI 10.1109/TPEL.2026.3675006

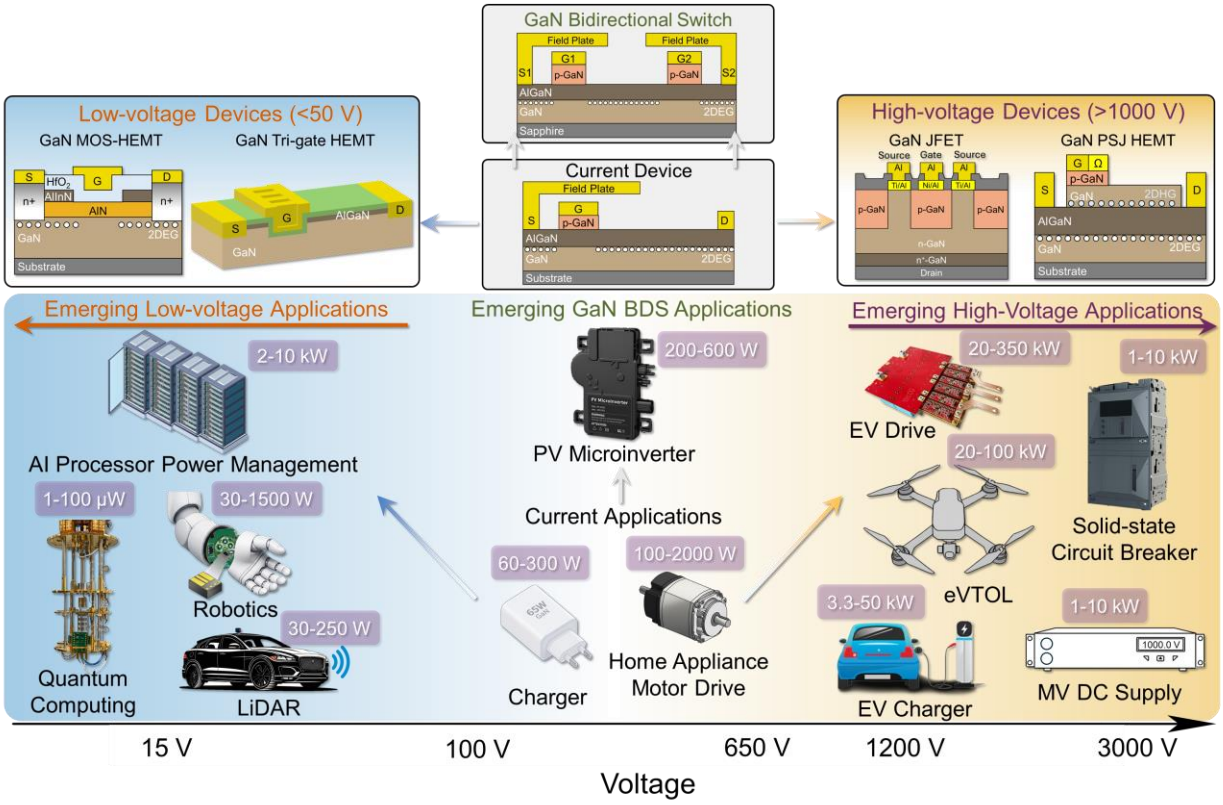

Fig. 2: Current and emerging applications for GaN power electronics and the associated GaN power devices, classified by voltage and power ranges.

In addition to reviewing recent developments, we provide original analysis on the physical performance limits and system-level benefits of emerging GaN device technologies. The overall scope of this paper including emerging devices and applications is illustrated in Fig. 2.

At the low-voltage end, conventional p-GaN gate HEMTs face scaling limitations. Recent innovations, including GaN MOS-HEMTs and multi-gate device architectures [5], [6], have enabled significant performance improvements at low voltage. A key milestone is Intel's demonstration of DrGaN—an integrated GaN-Si hybrid platform that monolithically combines CMOS gate drivers and GaN power switches [7]. These advancements pave the way for GaN adoption in new applications such as artificial intelligence (AI) processor power delivery, humanoid robotics, and light detection and ranging (LiDAR). Low-voltage GaN devices and applications are discussed in Sections II and III, respectively.

At the high-voltage frontier, progress is being made on both lateral and vertical GaN devices. Notable achievements include lateral GaN HEMTs with breakdown voltages exceeding 10 kV [8] and 1.2 kV-class vertical GaN transistors [9], the figure-of-merits of both having surpassed SiC MOSFETs. These devices are well-suited for applications such as electric vehicles (EVs), electric vertical take-off and landing (eVTOL) aircraft, medium-voltage direct current (MVDC) power supplies, and solid-state circuit breakers. Note that while emerging vertical GaN transistors demonstrate avalanche capability [9], [10], the non-avalanche GaN HEMTs withstand surge energy by a significant overvoltage margin [11]; hence, higher voltage is also critical to robustness enhancement. High-voltage devices and applications are covered in Sections IV and V, respectively.

Beyond voltage scaling, the lateral architecture of GaN devices enables a natural pathway to monolithic integration. One particularly transformative innovation is the monolithic GaN bidirectional switch [12], which can drastically simplify AC power architectures by replacing complex back-to-back unidirectional device configurations. These devices and their applications are discussed in Sections VI and VII, respectively.

In parallel, GaN's robustness in extreme environments—from deep cryogenic temperatures (<4 K) in quantum computing systems to high-temperature operation above 500 °C for aerospace electronics—broadens its applicability. These topics are addressed in Section VIII.

Finally, in Section IX, we discuss the packaging innovations required to fully unlock GaN's capabilities, especially as devices move into new thermal, electrical, and mechanical regimes. Section X concludes the paper.

Given space constraints, this work intentionally does not review GaN devices and applications in the 100-650 V range, which have been reviewed extensively in prior literature [2], [13], [14], [15], [16]. Furthermore, to ensure the highest practical relevance for power electronics applications, this paper primarily focuses on GaN devices developed in industry, while acknowledging the significant and valuable contributions made by academic research.

II. Low-Voltage GaN Devices

A. Device Structure

This work is licensed under a Creative Commons Attribution 4.0 License. For more information, see https://creativecommons.org/licenses/by/4.0/

This article has been accepted for publication in IEEE Transactions on Power Electronics. This is the author's version which has not been fully edited and content may change prior to final publication. Citation information: DOI 10.1109/TPEL.2026.3675006

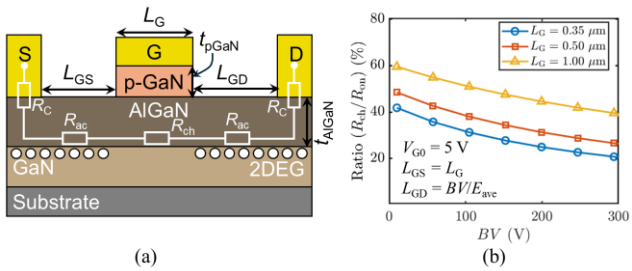

Fig. 3: (a) Schematic of the on-resistance component in a p-GaN gate HEMT. (b) Calculated ratio of R_{ch} to R_{on} for device ring with BV from 10 V to 100 V and L_G scaling from 0.35 µm to 1 µm.

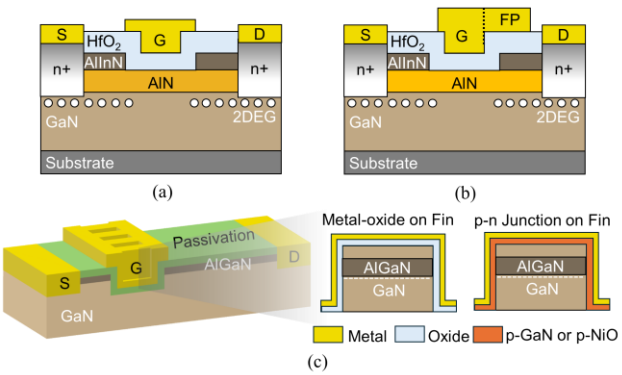

Fig. 4: Schematic of (a) GaN MOS-HEMT with recessed gate and (b) GaN MOS-HEMT with gate-connected field plate. (c) 3-D schematic of a GaN trigate HEMT with a zoom-in view of gate structures with metal-oxide and p-n junction wrapping around AlGaN/GaN fins.

The p-gate GaN HEMT, as shown in Fig. 3(a), is the prevailing commercial technology for enhancement-mode (E-mode) GaN HEMTs. The total on-resistance (R_{on}) is composed of access resistance (R_{ac}), gated-channel resistance (R_{ch}), and drain/source Ohmic contact resistances (R_c). As the voltage rating decreases, R_{ch} can gradually emerge as the dominant component of R_{on}. For a back-of-the-envelope calculation, Fig. 3(b) presents the R_{ch}/R_{on} ratio as the device breakdown voltage (BV) decreases from 300 V to 10 V, where BV scaling corresponds to gate-to-drain distance (L_{GD}) scaling with a 1 MV/cm average lateral electric field (E_{ave}) [17]. Typical AlGaN thickness (20 nm) and p-GaN parameters (doping concentration 5×10^{18} cm^{-3} and 80 nm thickness) are used [18]. The calculation reveals that, at BV = 30 V, R_{ch} could contribute approximately 60% of R_{on}.

However, the p-GaN gate exhibits a fundamental limitation to reduce R_{ch}, which can be given as:

$$R_{ch} = \frac{L_G}{\mu_{2DEG} C_G V_{G0}} \tag{1}$$

where L_G is the gate length, μ_{2DEG} is the mobility of two-dimensional electron gas (2DEG), $C_G = (1/C_{p\text{-}GaN} + 1/C_{AlGaN})^{-1}$ is the unit-area gate capacitance calculated based on the p-GaN capacitance ($C_{p\text{-}GaN}$) and AlGaN capacitance (C_{AlGaN}), and V_{G0} is the gate overdrive. The relatively thick p-GaN required to enable the E-mode operation not only results in a small C_G but also limits the L_G downscaling capability due to the insufficient gate control to overcome the short-channel effects. Hence, the p-GaN gate may not be optimal for very low voltage GaN HEMTs.

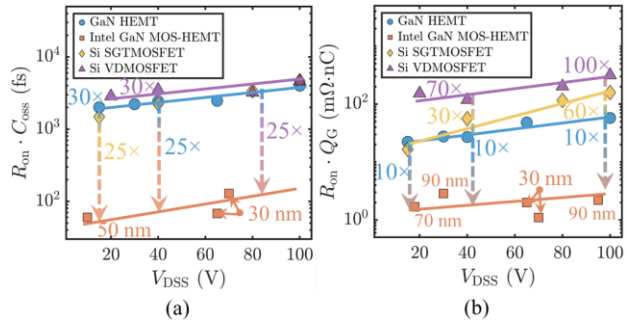

Fig. 5: Benchmark of (a) $R_{on}C_{oss}$ and (b) $R_{on}Q_G$ switching FOMs of Si SGTMOSFET, Si VDMOSFET, p-GaN gate HEMT, and Intel's GaN MOS-HEMT at voltage rating from 10 to 100 V. Improvement of GaN MOS-HEMT over Si MOSFETs and GaN HEMT is marked.

Intel has pioneered a distinct approach to developing low-voltage GaN power devices on 300-mm CMOS processes [7], [19], [20], [21], [22], [23], [24]. The core innovation is the E-mode GaN MOS-HEMT featuring a recessed AlInN barrier and high-κ HfO_2 gate dielectric [see Fig. 4(a)], which enables a low R_{ch} by placing the gate very close to the 2DEG channel (<10 nm) while preserving the high electron mobility in 2DEG, at the same time allowing for L_G scaling down to 30 nm. As shown in Fig. 4(b), further incorporation of submicron gate-connected field plates (FPs) can allow for BV upscaling up to 95 V [23]. Best-in-class switching figure-of-merits (FOMs), including $R_{on}C_{oss}$ of 70-115 fs and $R_{on}Q_G$ below 4 mΩ·nC, are achieved [23], outperforming Si MSOFETs and p-GaN gate HEMTs by 25× and 10-100×, respectively, across 10-100 V rating [see Fig. 5].

While these metrics establish GaN MOS-HEMTs as best-in-class n-channel devices, a high-performance complementary p-channel device is essential for control circuits. Addressing the p-channel GaN device deficiency [25], [26], [27] [28], [29], [30], [31], Intel's platform monolithically integrates Si PMOS and GaN NMOS to construct a GaN-Si hybrid CMOS [19], [21]. Building on this, a "DrGaN" is demonstrated to monolithically integrate CMOS gate drivers on GaN power switches on a single die [7]. Unlike conventional discrete solutions suffer from parasitic inductance-induced gate ringing [32], DrGaN's submicron interconnects minimize voltage oscillations. The demonstrated DrGaN based on 180-nm Si PMOS and GaN NMOS processes achieves with a specific R_{on} ($R_{on,sp}$) of 0.8 mΩ·mm^2, and a precise 0 V/1.8 V rail-to-rail switching.

An alternative gate technology – 3D trigate – has emerged as a promising candidate for low-voltage applications [5], [6], which can also be combined with MOS-HEMT to enhance the L_G scaling as reported by Intel [22]. As shown in Fig. 4(c), trigate GaN HEMTs have been demonstrated with both MOS- and pn-junction variants [6], [33]. The trigate can achieve the E-mode while maintaining high 2DEG concentration through the strong depletion from the multi-sided gate and a reduction in 2DEG sheet density due to the partial strain relaxation in the narrow, etched fins [5], yielding a 3× lower R_{ch} compared to the planar p-GaN gate [33]. Switching analysis predicts the 15-V GaN trigate HEMTs with 100-nm fin length to enable 10× reduction in $R_{on}Q_G$ and 45% lower $R_{on}Q_{oss}$ versus p-GaN gate HEMTs [34].

This work is licensed under a Creative Commons Attribution 4.0 License. For more information, see https://creativecommons.org/licenses/by/4.0/

This article has been accepted for publication in IEEE Transactions on Power Electronics. This is the author's version which has not been fully edited and content may change prior to final publication. Citation information: DOI 10.1109/TPEL.2026.3675006

Device Specification	Symbols	Values / Equations
Breakdown Voltage	BV	30 V
Gate length	L_G	30-550 nm
Gate-source Distance	L_{GS}	L_G (30-550 nm)
Gate-drain Distance	L_{GD}	300 nm
AlGaN Barrier Thickness	t_{AlGaN}	3 nm
AlN Thickness	t_{AlN}	1 nm
Gate Dielectrics Thickness	t_{ox}	4 nm, or 2-6 nm
Gate Dielectric Constant	ε	Al_2O_3 (8.9), HfO_2 (25)
Multi-finger width	W_{fin}	1.6 μm
Contact Resistance	R_C	0.137 Ω·mm
Contact Transfer Length	L_t	0.8 μm
2DEG Sheet Resistance	R_{sh}	500 Ω/sq
Gate Overdrive Voltage	V_{G0}	1 V or determined by gate dielectrics

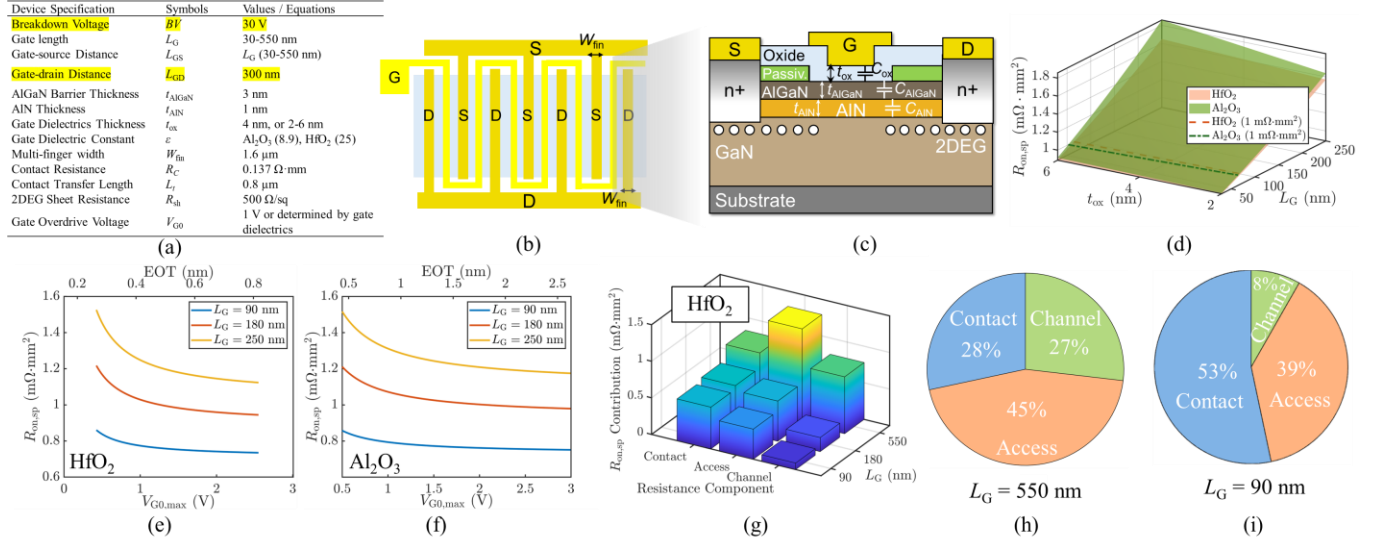

Fig.6: Modeling of a GaN MOS-HEMT with a BV of 30 V. (a) Device parameters used in GaN MOS-HEMT modeling. (b) Schematic of multi-finger layout. (c) Cross-section schematic of GaN MOS-HEMT with key geometric parameters marked. (d) 3D plot of $R_{on,sp}$ versus t_{ox} and L_G for MOS-HEMTs with Al_2O_3 and HfO_2 gate oxide. $R_{on,sp}$ versus $V_{G0,max}$ for (e) HfO_2 and (f) Al_2O_3-baesd devices. (g) 3D bar chart of the contribution of access, contact, and channel resistances for high-k MOS-HEMTs. Note that R_{ac} scales with L_G since L_G=L_{GS}. Pie charts of R_{on} breakdown at (h) L_G = 550 nm and (i) L_G=90 nm.

B. Device Performance and Limit

Building on industrial demonstrations, we model GaN MOS-HEMT to illustrate design trade-offs and performance limits. The device parameters [35], [36], [37], [38], multi-finger layout, and device structure are shown in Figs. 6(a)-(c). Considering the contact transfer length (L_t) equal to half the finger width (W_{fin}) in practical device layout, the device $R_{on,sp}$ is given by

$$R_{on,sp} = (2L_t + L_{GS} + L_G + L_{GD}) \times [(2R_C + R_{ch} + R_{sh}(L_{GS} + L_{GD})] \quad (2)$$

where L_{GS} is the gate-source distance assumed to be the same as L_G as limited by lithography, R_C and $R_{sh}(L_{GS} + L_{GD})$ represent the contact resistance and R_{ac} both in Ω·mm, respectively.

Fig. 6(d) shows the calculated $R_{on,sp}$ as a function of gate oxide thickness (t_{ox}) and L_G for two gate oxides, Al_2O_3 and HfO_2, revealing the effective reduction of $R_{on,sp}$ through downscaling t_{ox} and L_G and deploying high-κ gate oxide. However, the t_{ox} reduction would shrink the maximum gate bias and overdrive ($V_{G0,max}$), resulting in a trade-off between $V_{G0,max}$ and $R_{on,sp}$. Such a trade-off is shown for HfO_2 and Al_2O_3 gate oxides in Fig. 6(e)-(f). The results reveal that high-κ HfO_2 achieves a much smaller Equivalent Oxide Thickness (EOT), enabling a low $R_{on,sp}$ at a lower V_{G0}; in contrast, the use of lower-κ Al_2O_3 permits a higher $V_{G0,max}$ due to its higher critical electric field. These findings suggest the importance of gate oxide selection and t_{ox} optimization based on application requirements, particularly the desired V_{G0} range. Figs. 6(g)-(i) examine the $R_{on,sp}$ contribution. As L_G is scaled down, R_{ch} contribution becomes smaller. At the 90 nm node, R_c ultimately becomes the largest contributor to $R_{on,sp}$.

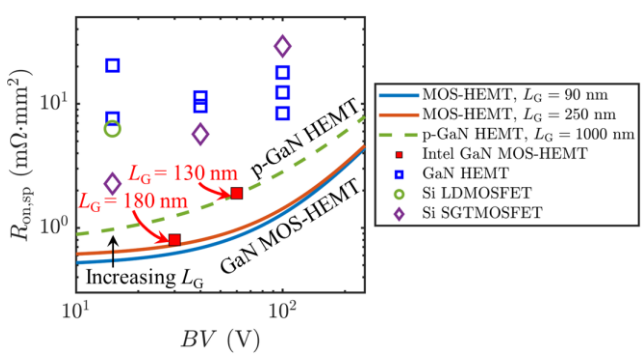

Fig. 7: Practical $R_{on,sp}$-BV performance limits of GaN MOS-HEMT with varying L_G from 90 nm to 250 nm, as well as p-GaN gate HEMT. Data points include Intel's GaN MOS-HEMTs, commercial p-GaN gate HEMTs, Si LDMOSFETs, and SGTMOSFETs.

Fig. 7 shows the practical $R_{on,sp}$-BV performance limits of GaN p-gate HEMTs and MOS-HEMTs, as well as the data points of Intel's GaN MOS-HEMTs, industrial p-GaN gate HEMTs, Si LDMOSFETs, and Si SGTMOSFETs. The $R_{on,sp}$-BV limits of GaN HEMTs are calculated by [17].

$$R_{on,sp} = R_C + R_{ch}\frac{BV}{E_{ave}} + \frac{BV^2}{qn_{2DEG}\mu_{2DEG}(E_{ave})^2} \quad (3)$$

where n_{2DEG} is the 2DEG density. Here we assume a μ_{2DEG} of 2000 cm²/Vs, an n_{2DEG} of 1.3×10^{13} cm^{-2}, L_G = 90 nm and 250 nm for MOS-HEMTs, and L_G = 1 μm for p-gate HEMTs.

The benchmark unveils the performance crossover between existing products. While 100-V p-gate GaN HEMTs show a 2.5× lower $R_{on,sp}$ than Si SGTMOSFETs, they underperform in the 20-40 V range [see Fig. 7]. From dynamic switching perspective, however, Fig. 5 shows that p-gate GaN HEMTs remain competitive with Si SGTMOSFETs in $R_{on}Q_G$ below 40 V, while pulling ahead significantly at 100 V. The state-of-the-art performance of the Intel MOS-HEMT confirms that the significant performance gap seen in current low-voltage GaN HEMT performance is architectural, not fundamental, which can be addressed by device innovations. Meanwhile, in highly-scaled GaN MOS-HEMTs, R_C becomes critical as shown in the breakdown in Fig. 6(g). State-of-the-art innovations optimize this by using regrown n$^+$-GaN source/drain regions with

This work is licensed under a Creative Commons Attribution 4.0 License. For more information, see https://creativecommons.org/licenses/by/4.0/

This article has been accepted for publication in IEEE Transactions on Power Electronics. This is the author's version which has not been fully edited and content may change prior to final publication. Citation information: DOI 10.1109/TPEL.2026.3675006

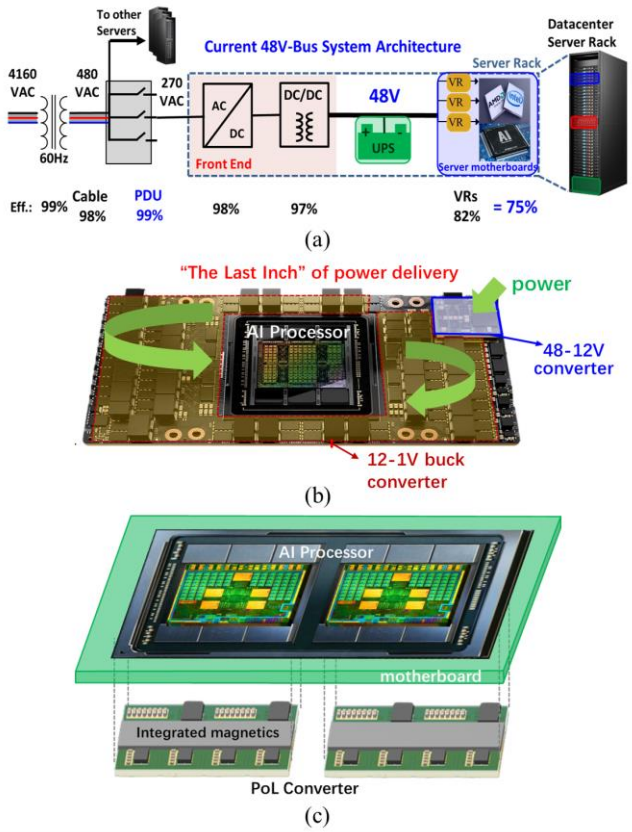

Fig. 8: (a) Schematic of power delivery architecture in a data center, with typical power conversion efficiencies shown for each stage. (b) Schematic of lateral power delivery for 48-to-1V point-of-load converter board. (c) Schematic of vertical power delivery for AI processors.

ultrahigh doping (~10^{20} cm^{-3}) [see Fig. 6(c)] and gold-free, CMOS-compatible copper metallization [19], [39]. Intel has achieved low R_C of 0.136 Ω·mm, enabling cost-effective, large-scale production on 300-mm GaN-on-Si wafers [19].

III. Low-Voltage Emerging Applications

A. Data Center

Data centers consumed ~ 4% of the total electric energy in the United States in 2023, a figure projected to more than double by 2030 [40]. This escalating energy demand, particularly from high-performance AI processors, necessitates highly efficient power supply architectures. Fig. 8(a) shows the prevailing power delivery architecture from the grid edge to processors. The 48 V bus line, typically converted from front-end converters and connected to the uninterruptible power supply (UPS), provides stable power for AI processors within server racks via point-of-load voltage regulators (VRs). This 48V-to-0.7~1V stage is the efficiency bottleneck of the entire power delivery architecture.

A commonly adopted solution for this 48 V power delivery is a two-stage architecture, as shown schematically with lateral power flow in Fig. 8(b). This approach incorporates a 12 V intermediate bus, facilitating a 48V-to-12V conversion followed by a 12V-to-1V stage [41], [42], [43], [44], [45], [46], [47], [48], [49], [50]. Alternatively, single-stage 48V-to-1V regulators employing specialized topologies also present a viable option,

TABLE I. Performances Summary of 48 V-to-12 V Converters.

Ref	Topology	Power Devices	f (kHz)	Density (W/in^2)	η_{peak} (%)[a]	η_{load} (%)[b]
[38]	SSCB	GaN	200	787	98.9	98.1
[39]	BMR351	Si	150	480	98.2	97.0
[40]	Buck	Si	200	360	98.1	97.6
[41]	Stacked Buck	Si	N/A	~190	98.5	97.3
[42]	Hybrid switched capacitor	Si	400	~160	98.0	97.6
[43]	Switched tank	Si	320	500	98.6	97.4
[44]	LLC	Si	1000	1210	97.8	96.5

[a] η_{peak} is the peak efficiency and [b] η_{load} is the load efficiency.

TABLE II. Performances Summary of 48 V-to-1 V Converters.

Ref	Topology	Power Devices	f (kHz)	Density (W/in^2)	η_{peak} (%)[a]	η_{load} (%)[b]
[48]	Full bridge current-doubler	GaN+Si	700	158	94.0	89.8
[49]	Capacitor buck	Si	150	133	93.4	86.1
[50]	Capacitor buck	GaN+Si	400	171	91.7	85.8

[a] η_{peak} is the peak efficiency and [b] η_{load} is the load efficiency.

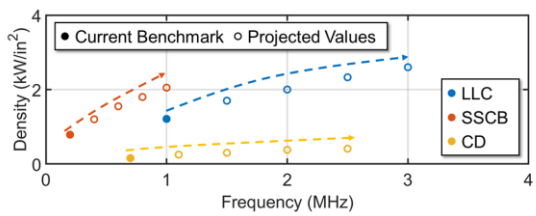

Fig. 9: Current and projected power density of 48V point-of-load converters based on unregulated 48V/12V LLC [45], regulated 48V/12V SSCB converter [39], and regulated 48V/1V CD converter [49].

offering increased power density and improved total efficiency [51], [52], [53]. In both architectures, due to the large processor size and input current, the power delivery network (PND) impedance in the "last inch" of the power delivery path is becoming a limiting factor of system efficiency.

Vertical power delivery, as illustrated in Fig. 8(c), is envisioned as a promising solution to mitigate high PND losses. By miniaturizing VRs to the footprint of an AI processor, they can be mounted directly beneath the chip, eliminating the need for lateral power routing across the motherboard and significantly reducing interconnect length and associated losses. These VRs may be implemented in a modular fashion but must achieve current or power densities comparable to those of AI processors. Realizing this vision demands aggressive converter miniaturization, primarily through switching frequency scaling—an area where low-voltage GaN devices are widely regarded as key enablers.

Due to the limited advantages of current low-voltage GaN HEMTs over Si MOSFETs, their adoption in 48 V systems remains limited—particularly in the second stage of power conversion, where their use is still rare. Table I summarizes the performance of the state-of-the-art 48V-to-12V converters (i.e., the first stage of the two-stage solution). Among the different solutions, the unregulated LLC converter [47] achieves the highest power density at 1210 W/in², while the regulated symmetric series-capacitor buck (SSCB) converter [41] delivers the highest efficiency at 98.88%. Table II presents a

This work is licensed under a Creative Commons Attribution 4.0 License. For more information, see https://creativecommons.org/licenses/by/4.0/

This article has been accepted for publication in IEEE Transactions on Power Electronics. This is the author's version which has not been fully edited and content may change prior to final publication. Citation information: DOI 10.1109/TPEL.2026.3675006

TABLE III. PERFORMANCES SUMMARY OF 12 V-TO-1 V POWER MODULES.

Part Number	Power Devices	Output Current (A)	f (MHz)	Converter Footprint (mm^2)	Converter Height (mm)
MPC24380	Si	260	1.5	90	5
Projection	GaN	260	3	90	3
Projection	GaN	260	6	90	2

Note: the inductor thickness of MPC24380 at 1.5MHz is ~4mm. Here we assume that the increase in power density primarily reflects a reduction in converter height, while maintaining the same footprint.

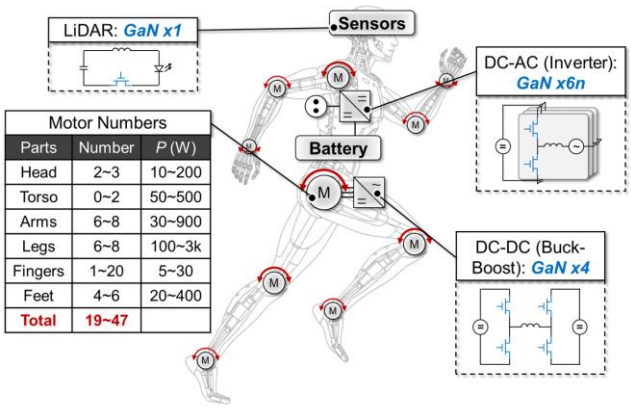

Fig. 10: Schematic of power electronics system in a humanoid robot and the typical topologies of power converters. The number of GaN devices or modules is marked for each function part.

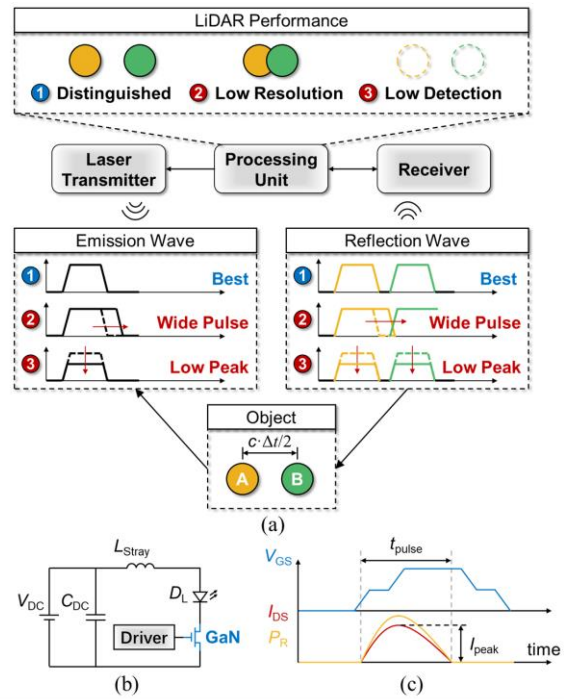

Fig. 11: (a) Working schematic of a LiDAR-based DToF system. (b) Circuit schematic and (c) ideal waveforms of a laser driver module based on GaN HEMT.

performance summary of various 48V-to-1V single-stage converters. The regulated current-doubler (CD) converter [51] demonstrates the highest efficiency at 94%.

Based on these results, we select the LLC, SSCB, and CD converters as representative examples to evaluate the potential impact of next-generation low-voltage GaN devices. These devices are projected to improve switching FOMs by at least an order of magnitude, as indicated by the benchmark data in Fig. 5. Such improvements could enable a significant increase in switching frequency, thereby enhancing converter power density. Using current benchmark designs and assuming that the size of passive components scales inversely with switching frequency, we estimate the achievable power densities of the three converters at elevated frequencies. This power density estimation is based on the assumption that the size of the magnetic components decreases proportionally with the increase in switching frequency, while the size of the semiconductor components remains unchanged. This also explains the different slopes observed for the projected power density of each converter topology. The resulting improvement slopes differ because the volume share of these frequency-scalable magnetic components varies for each converter topology. As shown in Fig. 9, this conservative projection suggests that GaN devices can enable a 3× increase in switching frequency and a 1.5× to 2.5× improvement in power density for VRs —potentially removing a key barrier to the realization of vertical power delivery.

Table III summarizes the performance of a state-of-the-art 12 V-to-1 V power module designed for data center applications. The converter operates at 1.5 MHz and achieves a power density of 9 kW/in³. The table also presents the projected power densities when the switching frequency is increased to 3 MHz and 6 MHz using GaN devices. In this projection, the converter footprint is assumed to remain constant, while the inductor thickness is proportionally reduced with increasing frequency. The results indicate that the power density can be improved by more than 2× with the adoption of GaN technology.

B. Humanoid Robot

Humanoid robotics, an inherently interdisciplinary field spanning mechanics, electronics, computer science, artificial intelligence, and sensing, is poised for a transformative leap [54], [55]. Fueled by the recent advancements in generative AI, humanoid robots are rapidly transitioning to industrialization, with their market size projected to surge dramatically from USD 2.98 billion in 2025 to an astounding USD 243.40 billion by 2035 [56].

Leveraging their human-like design, humanoid robots are uniquely suited for diverse human-centric environments, demanding complex movements and seamless interactions [57], [58], [59]. This intricate functionality is powered by a multitude of electric motors, and the robot's overall dexterity is fundamentally dependent on its integrated power electronics system [60], [61], [62], [63]. As shown in Fig. 10, the core power architecture inside a humanoid robot comprises a high-density battery (e.g., 48V), DC-DC power conversion modules, three-phase motors with their dedicated inverters, and sensing systems based on LiDAR. The DC-DC converters regulate the 48V battery input to various lower voltages required by processors and sensors or provide input to motor drivers that enable intricate robotic movements. The sensory systems (e.g., LiDAR) provide crucial feedback for processors.

This work is licensed under a Creative Commons Attribution 4.0 License. For more information, see https://creativecommons.org/licenses/by/4.0/

This article has been accepted for publication in IEEE Transactions on Power Electronics. This is the author's version which has not been fully edited and content may change prior to final publication. Citation information: DOI 10.1109/TPEL.2026.3675006

Achieving complex motions in a humanoid robot with high degrees of freedom (DOF) typically requires 19 to 47 servo motors with power levels ranging from several watts to thousands of watts [64], [65]. Critical challenges emerge in realizing high torque density with precise servo control for motors. Furthermore, ensuring high-efficiency and compact Battery Management Systems (BMS) is crucial but difficult.

Low-voltage GaN power devices emerge as a promising solution to these challenges [65], [66], [67]. With high-frequency switching capabilities, GaN devices enable more precise joint motor controllers, smaller module size, and significantly reduced switching losses. For example, in motor drive systems, high-frequency pulse width modulation (PWM) control reduces current ripple to within ±1% while simultaneously cutting switching losses by 50% [67]. Moreover, to reduce cabling complexity and overall system weight, the motor systems in humanoid robots require high integration, merging both the driving electronics and the motor into a single electromechanical unit. The small die size and compact footprint of GaN devices make them exceptionally well-suited to fit into the limited space available within robot joints [68], [69].

Additionally, GaN-based DC-DC converters for BMS have been reported to achieve efficiencies greater than 96%~98% with high power density over 4.2 kW/L [70], [71], [72], [73]. In the sensor realm, GaN-driven low-ripple power supplies and nanosecond-level pulse circuits are able to directly enhance the precision and anti-interference capabilities of perception systems, which will be detailed in the next sub-section.

Major GaN device manufacturers, including InnoScience, Texas Instruments [66], Infineon [74], and EPC [75], have recently reported the adoption of GaN chips in robotic systems. As shown in Fig. 10, a single humanoid robot requires hundreds of GaN devices. Given this large device count, the rapidly evolving robotics sector has the potential to become a significant market driver for low-voltage GaN power devices.

C. LiDAR

The growing demands of smart infrastructure, industrial automation, and advanced navigation systems call for sensors with high accuracy, fast response, and strong reliability. In applications such as humanoid robotics and autonomous vehicles, rapid and accurate perception is critical for precise motion, safe operation, and accident prevention. LiDAR systems are well-suited to meet these requirements. By emitting laser pulses and measuring their time-of-flight, LiDAR provides high-speed, high-resolution 3D spatial data. This capability offers clear advantages over traditional sensors such as radar, cameras, and ultrasound, making LiDAR a promising technology for next-generation robotics and autonomous systems [76], [77].

Fig. 11(a) shows the schematic of a direct time-of-flight (DToF) system, a widely implemented LiDAR architecture for measuring object distances [78]. The laser transmitter, as shown in Fig. 11(b), typically consists of an *LC* discharge circuit with a DC power supply (V_{DC}) (ranging from 5 V to 80 V), a laser diode (D_L), and a series-connected power switch [79]. Triggered by a driving signal, the power device turns on, allowing a large current pulse to flow through the laser diode, which then emits

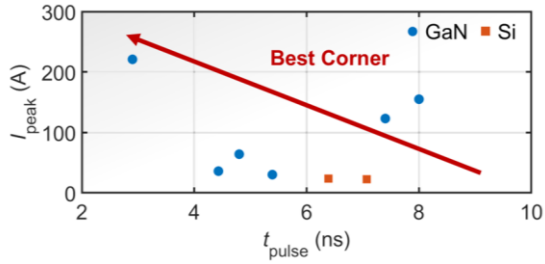

Fig. 12. Performance benchmark of the peak current and pulse width reported in LiDAR systems based on Si and GaN power devices.

a laser beam with the transmitted laser power (P_S) proportional to the peak discharging current (I_{peak}).

In a direct time-of-flight (DToF) LiDAR system, distance is measured by calculating the time delay between emitted and reflected laser pulses. Optimal performance depends on short pulse widths (t_{pulse}) and high received power (P_R). When objects are too close, overlapping reflected pulses reduce range resolution. Thus, the minimum detection range between two objects, R_{min}, can be defined as:

$$R_{min} = \frac{c \cdot t_{pulse}}{2} \tag{4}$$

where c is the speed of light.

On the other hand, the detection range is usually determined by P_R, which can be expressed as [80], [81], [82]:

$$P_R = \frac{4KP_S T_A \eta_t}{\pi \emptyset^2 R^2} \tag{5}$$

where K is the beam profile function, T_A is atmospheric transmission, η_t is transmitter optical efficiency, Φ is beam width, and R is the transmission range. Since P_S is proportional to I_{peak}, this can be simplified as:

$$P_R = \beta I_{peak} \tag{6}$$

where β is a constant transmission coefficient.

Thanks to their fast switching speed, low on-resistance, and minimized parasitics enabled by advanced packaging, GaN devices are particularly well suited for LiDAR drivers. Integrated gate drivers further enhance switching speed, offering clear performance advantages over Si-based solutions. Fig. 12 benchmark t_{pulse} and P_R reported in GaN- and Si-based LiDAR systems [78], [79], [82], [83], [84], highlighting the advantage of GaN in achieving higher P_R and lower t_{pulse}– implying improved R_{min} and P_R capability. With the availability of the next-generation low-voltage GaN devices, these systems are expected to support increasingly complex and long-range sensing applications.

IV. High-Voltage GaN Devices

Growing demand for kilovolt-class devices is driven by applications such as 800 V EV systems and medium-voltage grid-tied converters. Current devices have notable limitations: Si IGBTs (up to 6.5 kV) are hindered by slow switching speeds, while SiC MOSFETs (up to 3.3 kV) remain costly. GaN offers a compelling alternative with high-frequency capability, superior performance limits, and potential cost advantages when fabricated on foreign substrates [see Fig. 1]. Notably, extensive research has been conducted on kilovolt-class GaN devices based on both vertical and lateral architectures.

This work is licensed under a Creative Commons Attribution 4.0 License. For more information, see https://creativecommons.org/licenses/by/4.0/

This article has been accepted for publication in IEEE Transactions on Power Electronics. This is the author's version which has not been fully edited and content may change prior to final publication. Citation information: DOI 10.1109/TPEL.2026.3675006

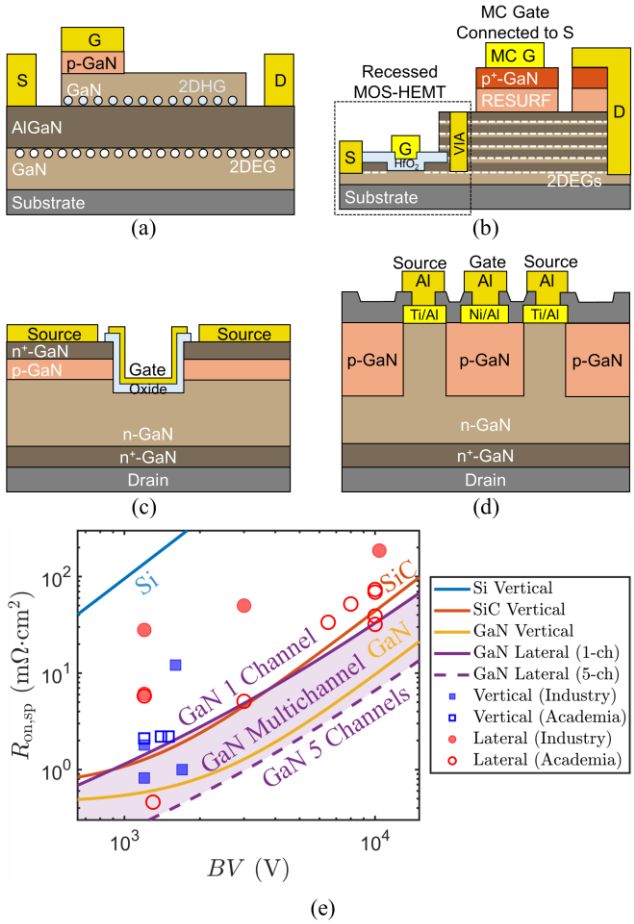

Fig. 13: Cross-sectional schematic of (a) GaN PSJ HEMT and (b) multi-channel monolithic-cascode HEMT, (c) GaN trench MOSFET, and (d) GaN Fin-channel JFET. (e) Theoretical $R_{on,sp}$-BV performance limits of vertical Si, SiC, and GaN devices as well as lateral GaN HEMTs, including both single-and multi-channel structures. Reported data points include state-of-the-art high-voltage GaN devices from industry and academia.

A. High-Voltage Lateral Devices

For high-voltage lateral GaN devices, key challenges include electric field management and substrate leakage. Insulating substrates like sapphire eliminate vertical leakage paths and have been adopted by companies such as Transphorm [85], [86] and Power Integrations [87] for 1.2 kV HEMTs on 6-inch wafers. It should be noted that both industry devices adopt a cascode structure, considering the robust, wide gate driving range and the simpler fabrication of the depletion-mode (D-mode) GaN HEMT. In academia, GaN-on-sapphire HEMTs with diverse device designs have been demonstrated with high BV up to 10 kV, which has been thoroughly reviewed in [4]. Another emerging substrate solution is the engineered QST® wafer, co-developed by Qromis and Shin-Etsu. Featuring a poly-AlN core with a GaN-matched coefficient of thermal expansion (CTE) and high thermal conductivity, QST enables thick (>15 µm), crack-free epitaxy on wafers up to 12 inches [88], [89]. On 8-inch QST®, Imec recently demonstrated 1.2 kV E-mode GaN HEMTs with a low $R_{on,sp}$ of 5.8 mΩ·cm^2, and wafer-scale fabrication yield over 95% [90].

Innovative device architectures are essential for effective electric field management. Conventional field plates alone are insufficient and often require additional plates, which increase design complexity and parasitic capacitance. One promising solution is the polarization superjunction (PSJ) HEMT [see Fig. 13(a)], which uses built-in, matched polarization charges in III-nitride heterostructures to form a charge-balanced lateral drift region. This design creates a uniform electric field in the blocking state, enabling aggressive BV scaling. Panasonic has demonstrated a 10.4 kV proof-of-concept device using this approach [91]. Powdec has demonstrated 1.2 kV large-area GaN-on-sapphire PSJ HEMTs [92], [93] and more recently at 3 kV [94]. The PSJ design also suppresses dynamic R_{on} [2], as the upper 2D hole gas can screen surface trap effects.

Another forward-looking architecture is the multi-channel monolithic-cascode (MC^2-HEMT) [8], as shown in Fig. 13(b). The multi-channel structure can significantly enhance the current capacity and reduce sheet resistance compared to the single-channel counterparts [95], [96], [97]. The MC^2-HEMT monolithically integrates a low-voltage, single-channel E-mode MOS-HEMT with a high-voltage, five-channel D-mode HEMT, using a p-GaN cap layer for charge balance. This device achieves a 10 kV E-mode cascode with a low $R_{on,sp}$ of 39 mΩ·cm²—surpassing the theoretical 1D limit of SiC [8].

B. Vertical High-Voltage Devices

While lateral GaN power HEMTs have been demonstrated at high voltage, their power scalability is challenged by the current capacity of the 2DEG channel and surface-related trapping effects [98], [99]. Vertical GaN devices overcome these issues by moving current flow and peak electric fields into the bulk semiconductor [100], [101]. This enables smaller chip footprint, superior thermal management, avalanche capability, and elimination of dynamic R_{on} [9], [98], [102], [103], [104]. The development of high-voltage vertical devices is also accelerated by the increased availability of large-diameter, free-standing GaN substrates [105], [106], [107], which allows the growth of thick, low-defect epitaxial layers. Notably, extensive research is also underway to develop kilovolt vertical GaN devices on foreign substrates [105], [108]. Among various device architectures, vertical GaN-on-GaN trench MOSFETs and Fin-channel JFETs have been demonstrated by industry [9], [101], [109]. A comprehensive review of the underlying fabrication technologies, including the selective area p-type doping via ion implantation and selective area regrowth, is provided in [6], [110], [111].

Fig. 13(c) shows a GaN trench MOSFET, which is similar to the SiC counterpart. First demonstrated by Otake *et al.* from ROHM [112], GaN trench MOSFETs offer simple fabrication, no JFET region, and high cell density. TOYODA GOSEI reported a 1.2 kV E-mode device with $R_{on,sp}$ of 1.8 mΩ·cm², later achieving >5 V threshold voltage (V_{TH}) and 1.6 kV BV [113], [114]. A variant that replaces the inversion-mode MOS channel with an accumulation-mode channel was later reported to improve channel mobility to 185 cm²/V·s [115].

The vertical GaN Fin-channel JFET is a variant of vertical GaN power FinFETs [6], [99] and developed by NexGen Power

This work is licensed under a Creative Commons Attribution 4.0 License. For more information, see https://creativecommons.org/licenses/by/4.0/

This article has been accepted for publication in IEEE Transactions on Power Electronics. This is the author's version which has not been fully edited and content may change prior to final publication. Citation information: DOI 10.1109/TPEL.2026.3675006

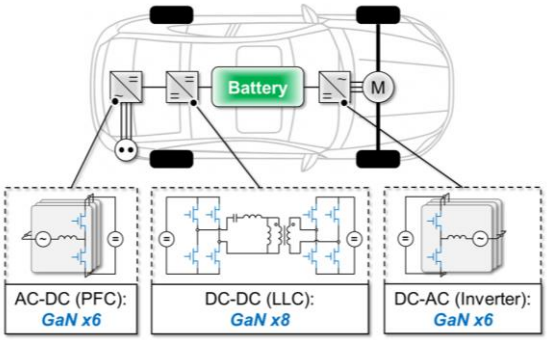

Fig. 14: Schematic of power electronics system and typical topologies in EVs. The number of GaN devices or modules in each section is marked.

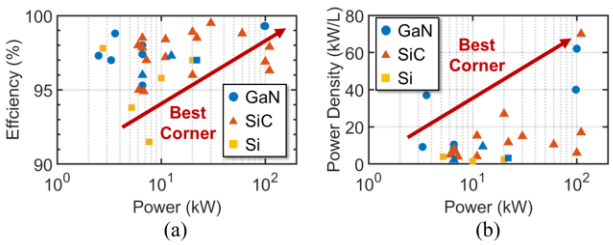

Fig. 15: Benchmark of (a) efficiencies versus power and (b) power densities versus power for the reported power converters in EVs based on GaN, SiC, and Si devices.

Systems for 650 V and 1.2 kV ratings. This device has demonstrated the best-in-class performance and robustness in GaN power transistors. Built on GaN-on-GaN, it uses sub-micron n-GaN fins and a selectively regrown p-GaN gate to achieve the E-mode operation, as shown in Fig. 13(d) [9], [109]. The 1.2 kV device achieves a low $R_{\text{on,sp}}$ of 0.82 mΩ·cm^2, and a stable V_{TH} >2 V up to 200 °C [9] with no dynamic R_{on} degradation in converter operation [98]. It demonstrates strong ruggedness, with over 10 J/cm² avalanche energy [116], [117] and a 40 µs short-circuit withstand time [118], [119] —far exceeding most Si and SiC transistors. In an 800 V ZVS buck converter, its low output capacitance enables 1 MHz switching with 97.7% peak efficiency, outperforming a commercial SiC MOSFET-based ZVS converter by 0.5–1% [118].

C. Performance Limit

Fig. 13(e) benchmarks the $R_{\text{on,sp}}$-BV trade-off of high-voltage GaN devices from both industry and academia [8], [9], [86], [87], [90], [91], [92], [94], [113], [114], [115], [120], [121], [122], [123], [124], [125], [126], [127], [128], [129], as well as the performance limits of single- and multi-channel GaN lateral HEMTs and vertical power transistors based on Si, SiC, and GaN. The performance limit of single-channel GaN HEMTs is calculated based on Eqn. (3). This equation is also adapted slightly to calculate the limit of multi-channel GaN HEMTs as described in [17]. The $R_{\text{on,sp}}$-BV limit of vertical power transistors can be written as

$$R_{\text{on,sp}} = R_{\text{C}} + R_{\text{ch}} + \frac{4BV^2}{\epsilon\mu E_{\text{C}}^3} \tag{7}$$

where μ denotes the electron mobility in the drift region, E_{C} and ϵ are the critical electric field and permittivity of a bulk semiconductor, respectively. R_{C} and R_{ch} are the contact and channel specific resistance, and their minimal values are based on the reports in [17].

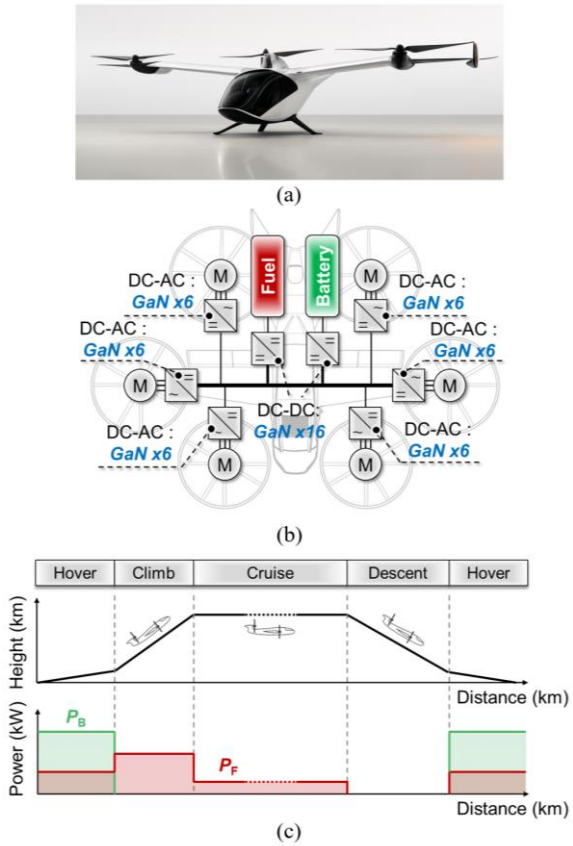

Fig. 16: (a) Illustration of an eVTOL aircraft. (b) Powertrain schematic for a hybrid-powered, multi-rotor eVTOL. (c) Schematic of the battery power and fuel power during the climb, cruise, descent, and hover stages.

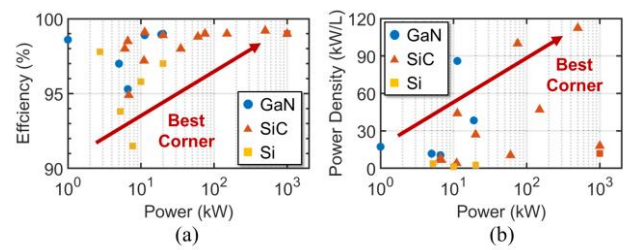

Fig. 17: Benchmark of (a) efficiencies versus power and (b) power densities versus power for the reported power converters for eVTOL applications based on GaN, SiC, and Si devices.

As shown in the benchmark, the performance of several 1.2 kV vertical GaN transistors from industry has exceeded the SiC material limit. At higher voltage, multi-channel GaN lateral devices outperform the SiC limit and the single-channel lateral GaN limit. These results, combined with the demonstrated advantage in the MHz converter [118], suggest the potential of high-voltage GaN devices.

V. High-Voltage Emerging Applications

A. Electric Vehicles

This work is licensed under a Creative Commons Attribution 4.0 License. For more information, see https://creativecommons.org/licenses/by/4.0/

This article has been accepted for publication in IEEE Transactions on Power Electronics. This is the author's version which has not been fully edited and content may change prior to final publication. Citation information: DOI 10.1109/TPEL.2026.3675006

A primary driver for the adoption of high-voltage GaN devices is the automotive and mobility sector, which includes electric vehicles (EVs), aircraft, boats, and similar applications. From the market analysis of GaN power devices, the automotive and mobility sector is forecast to grow to ~ $309 million by 2027 [3]. Fig. 14 shows the schematic of the power electronics system in EVs [130], [131], which consists of a three-phase inverter and an on-board charger (OBC) module that typically comprises a three-phase totem pole power factor correction (PFC) stage and an LLC resonant converter.

The industry is progressively migrating from 400 V to 800-1500 V architectures in EVs [132], [133]. This transition enables faster charging times and reduced conduction losses in power transmission lines throughout the powertrain, thereby improving overall vehicle efficiency. This shift creates a demand for 1.2 kV or higher-voltage power devices and modules. Furthermore, High-voltage GaN devices, as well as series-connected 650 V GaN HEMTs, with superior performance and lower cost compared to SiC MOSFETs, have the potential to enter these applications. It should be noted that the current rating of GaN HEMTs is rapidly advancing with several 100 A-class devices already demonstrated [134], [135]; the current limitations are often related to thermal management and material defects rather than the device structure.

Fig. 15 provides a comprehensive benchmark analysis of EV power electronics systems, illustrating the reported efficiencies and power densities for the converters/inverters based on Si, SiC and GaN devices [136], [137], [138], [139], [140], [141], [142], [143], [143], [144], [145], [146], [146], [147], [148], [149], [150], [151], [152], [153], [154], [155], [156]. The benefits of GaN devices are particularly evident in OBCs with a 6.6–22 kW power range [138], [140], where GaN's superior high-frequency capabilities have advanced efficiencies to 97% or higher and significantly improved power density [140], [157], [158], [159], [160], [161]. In [162], the OBC based on 650 V GaN HEMTs achieved 35-55% lower total power loss compared to those based on 1.2–1.7 kV SiC MOSFETs.

Beyond OBCs, GaN devices can also improve DC-DC converters and DC-AC inverters in the EV powertrain [118]. Motor drive inverters based on existing 650 V GaN devices have demonstrated over 99% efficiency under diverse operation conditions [146], [163]. A recent 100 kW all-GaN inverter demonstrated over 99% efficiency and a power density over 60 kW/L [151]. The availability of next-generation high-voltage GaN devices is expected to enable further improvements in these automotive systems.

B. Electric Vertical Take-off and Landing (eVTOL) Aircraft

Urban Air Mobility (UAM) represents a rapidly emerging application for power electronics, poised to revolutionize transportation by utilizing 3-D airspace and supporting the low-altitude economy [164], [165]. The eVOTL aircraft, as shown in Fig. 16(a), is regarded as the foundational unit for future UAM. Fig. 16(b) shows a schematic of the power electronics system for a six-rotor, hybrid-powered eVTOL [166]. Similar to EVs, eVTOLs use high-voltage batteries or fuel cells to power multiple electric motors, with typical voltages ranging from 400 V to 1000 V—making them ideal candidates for high-voltage GaN devices. However, unlike EVs, eVTOLs often exclude onboard chargers to reduce weight, instead adopting hybrid fuel cell designs for longer ranges (e.g., over 200 km [165]).

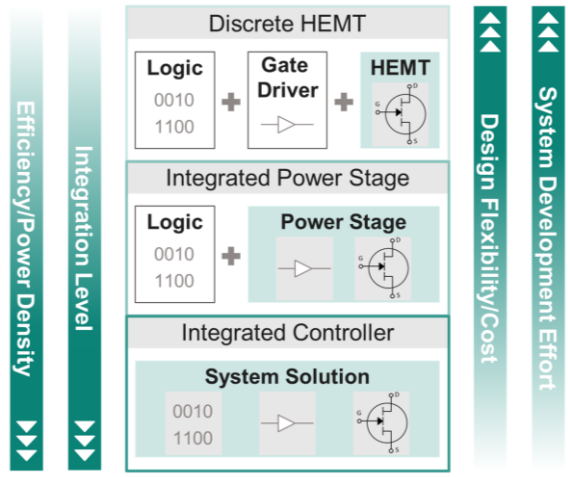

Fig. 18: GaN power HEMT and GaN power IC solutions motivated by existing Si technology.

In addition to inverters, DC-DC converters are essential in eVTOLs, as they play a key role in voltage regulation and power distribution between the fuel cell and battery cells. As shown in Fig. 16(c), an eVTOL mission involves four stages—hover, climb, cruise, and descent—each with different power demands. Power shifts from the battery during high-demand hover to the fuel cell during steady cruise, requiring continuous power balance across all stages.

Compared to EVs, eVTOLs place greater emphasis on reducing the weight and volume of power electronics modules, while also demanding higher efficiency, greater power density, and enhanced reliability. Fig. 17 benchmarks the power, efficiency, and power density of the reported eVTOL power systems based on Si, SiC and GaN devices [146], [154], [155], [156], [166], [167], [168], [169], [170], [171], [172], [173], [174], [175], [176]. While SiC-based systems demonstrate notable advantages, leveraging insights from EVs, GaN-based systems—especially with the emergence of next-generation high-voltage GaN devices—are expected to surpass SiC in both efficiency and power density. Since total system weight critically affects eVTOL's flight duration and range, improving power density and miniaturizing power systems are even more essential than in EVs. These stringent requirements further promote the adoption of GaN technologies, which support high-frequency operation and compact system design.

C. Other Emerging High-Voltage Applications

High-voltage GaN devices can also be well-suited for grid and industrial applications, particularly those requiring fast switching and relatively low power ratings. In the kilowatt range, medium-voltage DC (MVDC) power supplies—characterized by high voltage and low current, typically from tens of milliamps to a few amperes—are a key area of development. These supplies are widely used in medical equipment (e.g., X-ray generators), industrial processes, scientific instrumentation, defense systems, and fusion or plasma research [177]. Similar power levels are also found in solid-state transformers [178], [179]. In such applications, the high switching frequency of GaN

This work is licensed under a Creative Commons Attribution 4.0 License. For more information, see https://creativecommons.org/licenses/by/4.0/

This article has been accepted for publication in IEEE Transactions on Power Electronics. This is the author's version which has not been fully edited and content may change prior to final publication. Citation information: DOI 10.1109/TPEL.2026.3675006

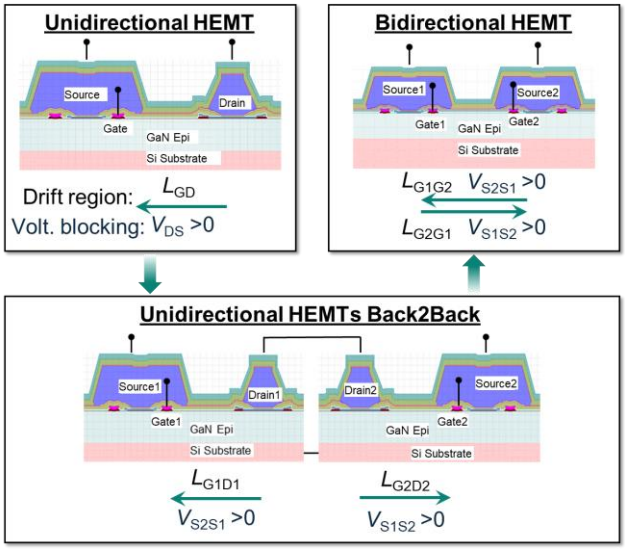

Fig. 19: Illustration of single-die GaN bidirectional HEMTs empowered by lateral structure.

devices enables smaller magnetic components and supports PCB-integrated transformer designs, improving converter efficiency and system power density. The resulting reduction in passive components, along with potential cost advantages of GaN devices, can also help lower overall system costs.

A distinct application of GaN devices is in solid-state circuit breakers (SCBs) [180], crucial for fast fault detection and short-circuit clearance in systems like mobile vehicles, DC microgrids, photovoltaic (PV) farms, and EV charging stations. Conventional SCBs (1–10 kV, 1–100 kW) using Si IGBTs can interrupt faults within 1–50 µs, vastly faster than mechanical breakers [181], [182], [183], [184]. GaN devices offer low on-resistance, ultrafast switching, and potential cost advantages over SiC devices, holding potential to enhance SCB response and efficiency. Recent prototypes include a GaN-based SCB with a record failure response time of 282 ns [185] and a 1 kV/10 A system achieving 99.95% efficiency [186]. Moreover, the fast switching speed of GaN devices can generate high voltage spikes, which places additional requirements on snubber circuits [187], [188]. This concern is particularly serious for lateral GaN devices, which typically lack intrinsic avalanche capability. The development of vertical GaN devices with avalanche capability and the ability to absorb energy could mitigate this issue, allowing for a significant simplification of the snubber circuit requirements needed to suppress transient voltage spikes. This inherent robustness brings substantial benefits to SCBs design.

Specialized applications that place a premium on low mass and high reliability are also benefiting from the advent of high-voltage GaN devices. In aerospace, the inherent radiation hardness of GaN devices [189], [190], [191] makes it ideal for 1–2 kV, 50–500 W power converters in Low Earth Orbit (LEO) satellites [192], [193]. In industrial automation, GaN devices are enabling efficient, MHz-frequency wireless power transfer systems (1–10 kW) for charging drones, robotics, and automated guided vehicles (AGVs), where MHz operation and resonant zero-voltage-switching (ZVS) topologies are key to achieving low-volume systems and efficient inductive coupling [194], [195], [196], [197].

VI. GaN Integration and Bidirectional Switches

As a lateral device, the GaN HEMT is naturally suited for monolithic integration. The successful development of Si bipolar-CMOS-DMOS (BCD) technology serves as a compelling precedent for leveraging the significant advantages of GaN into integrated circuits (ICs). Fig. 18 showcases commercially available GaN transistors and GaN power IC solutions to date. Various levels of integration are feasible, ranging from discrete HEMTs to Integrated Power Stages (IPS) incorporating gate driving and on-chip sensing functions, and further to full system-on-chip (SoC) solutions that include closed-loop control. This spectrum involves a trade-off between system performance and chip cost. While the higher price point may currently impede the widespread adoption of GaN ICs, the expedition towards greater GaN integration has demonstrably begun and is anticipated to continue its growth trajectory towards full SoC solutions for power conversion applications.

A truly game-changing innovation in power ICs emerges with GaN monolithic bidirectional switch (BDS) technology

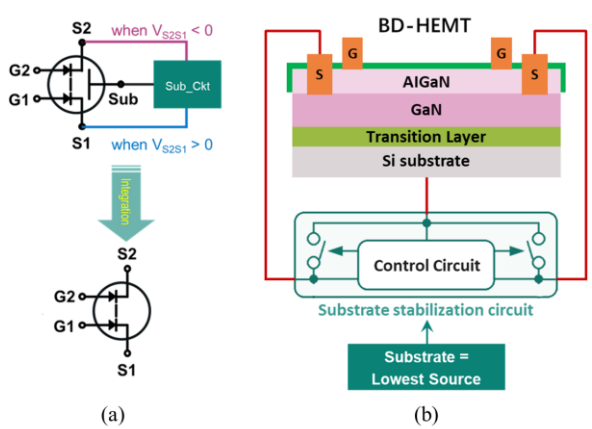

Fig. 20: (a) Device symbol and (b) schematic of a GaN BDS with integrated substrate control circuits.

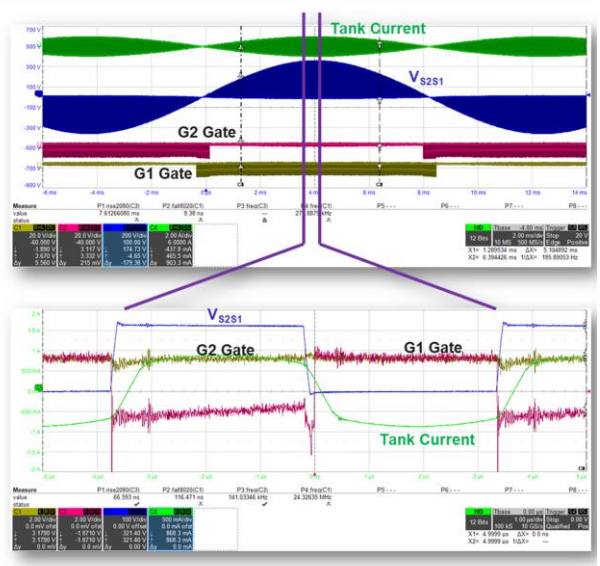

Fig. 21: AC-switching waveforms of a GaN BDS under a single-phase 120/240V system.

This work is licensed under a Creative Commons Attribution 4.0 License. For more information, see https://creativecommons.org/licenses/by/4.0/

This article has been accepted for publication in IEEE Transactions on Power Electronics. This is the author's version which has not been fully edited and content may change prior to final publication. Citation information: DOI 10.1109/TPEL.2026.3675006

[198], surpassing the current Si roadmap. Traditionally, GaN HEMTs, like most existing power devices, function as unidirectional switches (UDS) capable of blocking only a single voltage polarity (i.e., DC). However, broad categories of AC power systems, such as grid interfaces and motor drives [12], necessitate converter topologies that require switching devices with bipolar voltage blocking capability. Current implementations typically rely on a combination of discrete devices, often by connecting two UDS devices back-to-back (B2B), which inevitably increases chip count and system complexity. A more elegant and monolithic solution for BDS technology is now viable with GaN, paving the way for an entirely new family of power ICs: the GaN BDS.

Fig. 19 shows the monolithic concept of a GaN BDS, which originates from a drain-to-drain configuration of two GaN HEMTs whose gate-drain drift regions can be intelligently combined into a single, shared region [199]. This shared channel design leads to a remarkable 4-to-1 die area savings in GaN BDS compared to discrete solutions [12]. Furthermore, the independent control of its two gates provides greater flexibility across a total of four device operation modes. With a GaN BDS, true bidirectionality is achieved, allowing the device to block voltages and conduct current in both directions. These characteristics make it an ideal match for efficiently managing AC power. Importantly, the GaN BDS inherits all intrinsic benefits of GaN technology, e.g., superior FOMs. Since its first demonstration by Panasonic [198], after 15 years of dedicated development, GaN BDS with voltage ratings from up to 650 V are available from a few vendors [200], [201]. In academia, higher GaN BDS has been demonstrated up to BV over 3.3 kV [202].

It should be noted that two lateral GaN HEMTs can also be connected source-to-source, forming an alternative bidirectional device. While this configuration results in twice the channel area and features only one gate with no source contact, it improves the cell pitch for low-voltage (e.g., 40V) devices and has proven suitable for applications such as battery disconnect switches. Nevertheless, the scope of this article focuses solely on the drain-to-drain, dual-gate BDS architecture.

The realization of a fully functional GaN BDS, however, is not merely an incremental step from unidirectional GaN HEMTs but requires significant technological efforts. A persistent challenge since its early development has been substrate stability, often leading to unreliable switching in monolithically integrated GaN HEMTs. To prevent the "back-gating" effect, which can cause instability like dynamic R_{on}, the substrate potential of GaN power devices is desirable to be clamped to the source potential [203]. This clamping is straightforward for GaN HEMTs, where the source terminal consistently serves as ground reference, allowing an external short of the substrate to the source at the chip level or within the package.

In contrast, the GaN BDS features two source terminals where the AC voltage will continuously switch back and forth. Pinning the substrate potential of the GaN BDS to the respective lowest source therefore necessitates an additional substrate stabilization circuit, as shown in Fig. 20 [204]. This circuitry is also a key factor impacting device performance and reliability, and is currently under extensive investigation for further improvement [205]. To date, there is a mutual agreement between device manufacturers and end-users that this stabilization circuit should be monolithically GaN-integrated to ensure the overall GaN BDS is imperceptibly simple to use and cost-effective. The substrate stabilization circuit is, in itself, a standalone power IC block (e.g., built with HEMTs, diodes, resistors [205]). Without a doubt, GaN BDS has embarked on a brand-new journey in power ICs.

VII. Applications for GaN Bidirectional Switches

Fig. 21 demonstrates the true bidirectionality of the first-generation 650V GaN BDS pioneered by Infineon, leveraging its gate injection transistors (GIT) technology [206]. The continuous AC-switching capability has been validated in an exemplar single-phase system operating at a line-to-line voltage of 240 V_{rms}. Furthermore, application-oriented reliability testers have been developed, demonstrating over 25 years of projected lifetime for GaN BDS, thereby ensuring its robust and reliable operation across various power applications. A significant industry milestone was recently announced by Enphase Energy Inc., which plans to launch the world's first commercially available product utilizing GaN BDS technology in its upcoming IQ9 PV microinverter [207].

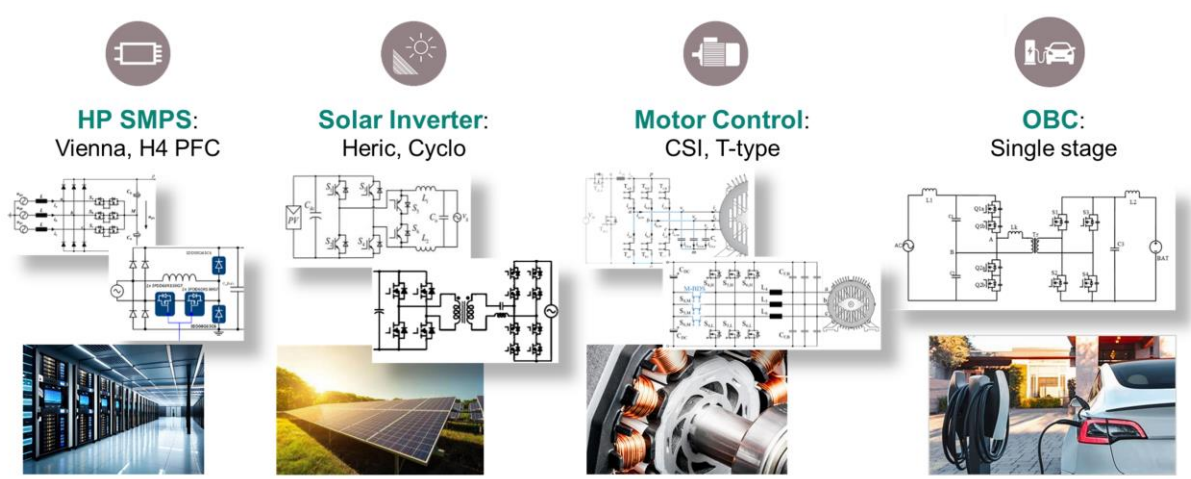

Fig. 22: Application space and circuit topologies for GaN BDS.

This work is licensed under a Creative Commons Attribution 4.0 License. For more information, see https://creativecommons.org/licenses/by/4.0/

This article has been accepted for publication in IEEE Transactions on Power Electronics. This is the author's version which has not been fully edited and content may change prior to final publication. Citation information: DOI 10.1109/TPEL.2026.3675006

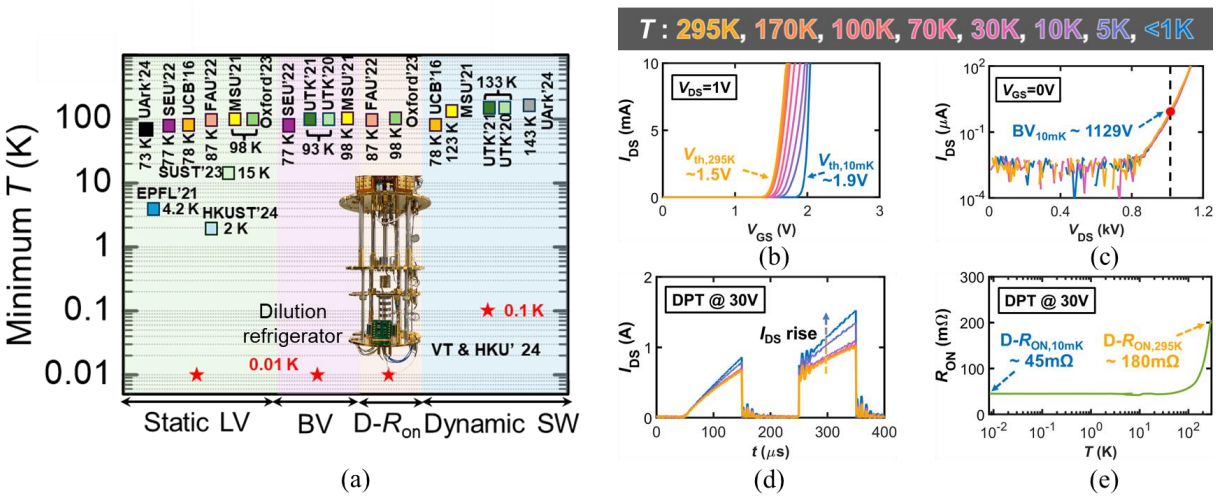

Fig. 23: (a) Benchmark of minimal temperature and test categories for the reported cryogenic characterizations of GaN power HEMTs. The inset shows the inner view of the dilution refrigerator used for deep cryogenic characterizations. (b) Transfer I-V characteristics, (b) off-state I-V characteristics, and (c) double-pulse waveforms at temperatures down to 10-100 mK. (d) Dynamic R_{on} evolution as temperatures decrease from 295 K down to 10 mK.

Fig. 22 highlights a diverse range of applications and topologies poised to significantly benefit from the availability of GaN BDS [204], spanning electric mobility, data centers, solar energy systems, motor drives, and many other power conversion sectors [208], [209], [210].

In the solar energy sector, particularly for PV microinverters with output powers of several hundred watts, topologies like the cycloconverter and transformer-less HERIC, traditionally relying on multiple Si UDS as AC-side switches, stand to benefit immensely. The direct integration of GaN BDS can benefit microinverters due to reduced material use and the inherent GaN advantages of higher switching frequencies, which lead to a reduction in passive component size and overall efficiency improvement. Similarly, for datacenter power supplies, where high-power switched-mode power supplies (SMPS) are driven by critical demands for energy efficiency and power density, GaN BDS offers significant advancements. The growing adoption of AI processors and hardware is dramatically increasing server rack power requirements. Existing AC-DC SMPS topologies, such as Vienna rectifier, H4 PFC and Cuk Converters, can leverage GaN BDS for reduced device counts, substantial size reduction, and improved ease of use.

The motor drive sector, consuming ~ 45% of the world's electricity, is another inherently key AC application where form factor optimization and reduced EMI are crucial drivers. Various converter topologies in variable speed drives (VSDs), such as T-type inverters and current source inverters (CSIs), can achieve significant performance improvements simply by a "plug-and-play" adoption of GaN BDS. This includes higher efficiency, reduced electromagnetic interference (EMI), and enhanced compactness. Furthermore, the emergence of GaN BDS also enables new, disruptive topology implementations. For example, it can be utilized in a single-stage matrix converter for AC-DC applications (e.g., EV OBCs) to replace traditional two-stage solutions, thereby folding PFC and DC-DC conversion into one stage. The combination of this novel topology with GaN BDS results in fewer components, reduced filter size, and the elimination of the DC link, ultimately leading to higher power density and lower system cost.

VIII. Cryogenic- and High-Temperature Applications

A. GaN Devices for Quantum Computing

Beyond traditional applications, GaN technology is increasingly recognized as a critical enabler for future quantum computing systems. The primary challenge in quantum computing today is scalability: current hardware is enormous; periphery control circuits are physically and thermally separated from qubits, which require deep cryogenic temperatures in the millikelvin (mK) range to maintain coherence. To bridge this gap, the concept of "cryo-CMOS" has emerged [211], [212], [213], aiming to bring electronic circuitry closer to the qubits at around <4 K, enabling higher levels of integration. The ultimate goal is to realize "quantum computing-on-a-chip," where qubits and their control electronics are monolithically integrated onto a single platform [5].

Achieving this vision demands devices capable of reliable operation at deep cryogenic temperatures. Unlike conventional doped devices that cannot fully function at such temperatures, GaN HEMTs are inherently immune to carrier freeze-out, thanks to the polarization-induced 2DEG. As summarized in Fig. 23(a) [214], [215], [216], [217], cryogenic measurements of GaN HEMTs—including static I-V characteristics, *BV* characteristics, dynamic R_{on}, and double pulse switching—were recently performed down to 10-100 mK by using a dilution refrigerator [218], [219]. Figs. 23(b)-(c) shows the on-state transfer characteristics and off-state blocking characteristics of a 650-V p-gate GaN HEMT measured at 10 mK, revealing the full functionality of gate control and high *BV*. Furthermore, GaN HEMTs can be hard-switched under gate control at temperatures as low as 100 mK [see Fig. 23(d)], and the dynamic R_{on} issue is effectively eliminated at deep cryogenic temperatures [see Fig. 23(e)]. The device R_{on} reduces by 4× when the temperature decreases from room temperature to cryogenic temperatures, significantly reducing conduction loss. This reduction is caused by the suppression of phonon scattering [220], [221], which increases 2DEG mobility. Furthermore, the dynamic R_{on} is

This work is licensed under a Creative Commons Attribution 4.0 License. For more information, see https://creativecommons.org/licenses/by/4.0/

This article has been accepted for publication in IEEE Transactions on Power Electronics. This is the author's version which has not been fully edited and content may change prior to final publication. Citation information: DOI 10.1109/TPEL.2026.3675006

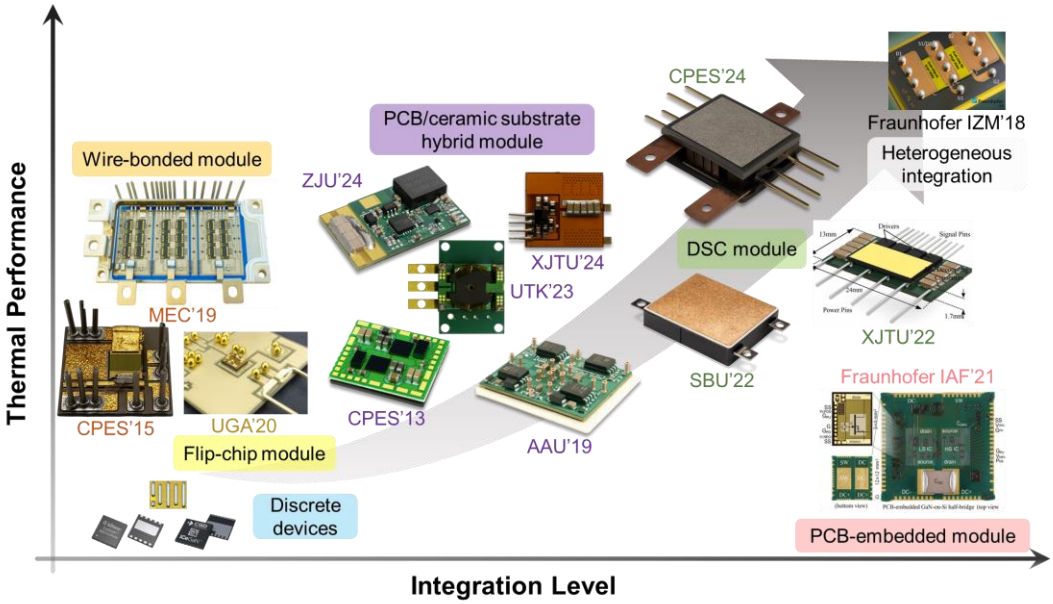

Fig. 24: Evolution of GaN packaging technologies in terms of thermal performance and integration levels.

effectively eliminated at deep cryogenic temperatures [see Fig. 23(e)]. This is attributed to the trap freeze-out; at these low temperatures, the emission time constants of traps become significantly longer, preventing them from interacting with carriers on the timescale of device switching, resulting in a stable R_{on} [215], [222]. These capabilities position GaN devices as promising candidates for integrated, scalable quantum control electronics operating reliably in cryogenic environments.

B. High Temperature GaN Electronics

GaN's superior material properties, such as low intrinsic carrier density (n_i), wide bandgap, make it a promising candidate for high-temperature electronics. The visionary goal for harsh environment applications includes avionics, deep-well energy exploration, or planetary missions [223]. SiC MOSFETs are known to suffer from MOS instabilities at high temperatures [224], [225]; SiC JFETs have been demonstrated as excellent candidates for high-temperature ICs [226]. Despite the progress, the system-level ambition requires the integration of high-temperature power electronics and robust digital logic and memory circuits capable of on-site sensing, control, and data processing, building on the same device platform. It is in this domain that GaN devices could play a role, enabling the high-speed, stable operation essential for logic [5], [227], [228], while the GaN HEMT platform also allows for the monolithic integration of low-power E/D-mode logic families [229].

The extreme thermal resilience of the GaN device was proven in early work [230], [231], [232], where bare-die AlInN/GaN HEMTs demonstrated operation for 25 hours at 1000 °C in vacuum [233], [234]. More recently, p-gate HEMTs have shown stable transistor operation up to 500 °C and have even survived for 10 days in a simulated Venus environment (460 ºC, 92 atm) [232], [235]. Building on this robust transistor technology, monolithically integrated circuits, including various memory cells (ROM, SRAM, D flip-flops), have shown stable operation up to 300 °C [236]. Furthermore, GaN ring oscillators have been shown to function up to 500 °C with a propagation delay of just 1.48 ns/stage [237]. The demonstration of these sequential logic and memory functions at high temperatures suggests the promise for integrating power electronics with control and processing units that can operate directly within harsh environments.

IX. Packaging Technologies

GaN power devices, due to high switching speeds, are highly sensitive to parasitic inductance [238], [239], [240], leading to oscillation [241] and overvoltage risks [242]. For GaN HEMTs, the lack of avalanche capability [243] and narrow gate voltage margin [13] further compromise reliability. To reduce parasitics, packaging technologies are shifting toward higher integration. However, this, combined with smaller chip areas, increases heat flux, and GaN's lower thermal conductivity than SiC, makes thermal management a major challenge [103], [244], [245]. As

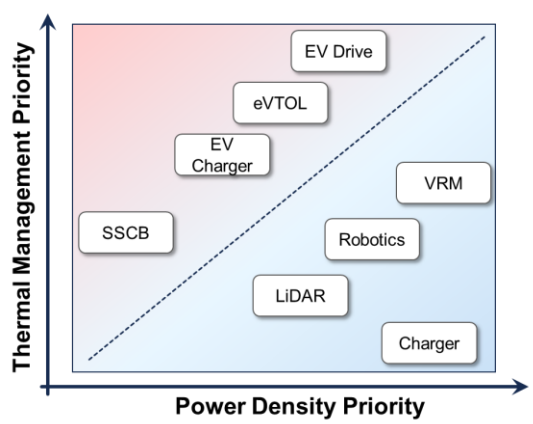

Fig. 25: Application-dependent mapping of GaN module packaging priorities. Thermal-limited applications occupy the upper-left region, while power density-sensitive systems appear in the lower-right region.

This work is licensed under a Creative Commons Attribution 4.0 License. For more information, see https://creativecommons.org/licenses/by/4.0/

This article has been accepted for publication in IEEE Transactions on Power Electronics. This is the author's version which has not been fully edited and content may change prior to final publication. Citation information: DOI 10.1109/TPEL.2026.3675006

TABLE IV. OVERVIEW OF EMERGING APPLICATIONS, TARGET VOLTAGE AND CURRENT RANGES, BENEFITS OF GAN DEVICES, CURRENT DEMONSTRATIONS, AND KEY CHALLENGES FOR THE GAN DEVICES DISCUSSED IN THIS WORK.

Potential applications	System voltage (V)	System current (A)	Target device voltage (V)	Benefit of GaN devices	Current demo	Challenges
AI processor power delivery	<1-48	>100	15-100	High *f*, efficiency, power density, bidirectional switch	Industrial demo	Cost, reliability, EMI
Humanoid Robot	<1-48	10-100	15-100	High *f*, efficiency, power density	Industrial demo	Cost, reliability
LiDAR	5-80	>50	15-100	Fast turn-on, high current rating	Industrial demo	Cost, reliability, robustness, EMI
Quantum computer power delivery	1m-15	1μ-1	15-100	Superior cryogenic performance down to 10 mK	N/A	No system demo
OBC and motor drive in EV	400-1500	10-500	650-1700	High *f*, efficiency, power density, bidirectional switch	Industrial demo	Cost, reliability, robustness
PV microinverter	230/400 AC	1-5	650-1700	High *f*, efficiency, power density, bidirectional switch	Industrial demo	Cost, reliability
eVTOL	400-1000	10-500	650-1700	High *f*, efficiency, power density	Research demo	Reliability, robustness
Solid-state transformer	110-15k	>10	650-10k	High *f*, efficiency, power density	Research demo	Cost, reliability
Solid-state circuit breaker	220-10k	10-10k	650-10k	Fast turn-off, low RON	Industrial demo	Current upscaling, reliability, robustness
Spacecraft	1k-2k	1-100	1200-1700	High *f*, efficiency, power density, advanced cryogenic and radiation performances	Research demo	Reliability and robustness in space

a result, packaging technologies are shifting toward highly integrated architectures with advanced thermal management [246], [247].

Fig. 24 maps the evolution of packaging technologies in terms of thermal performance and integration level, aiming for the realization of excellent thermal performance and high integration level [248], [249], [250], [251], [252], [253], [254], [255], [256], [257], [258], [259], [260]. Traditional TO-type packages, designed for Si devices, are unsuitable for GaN devices due to their long wire-bonding and terminal leads [249], [261], [262], which introduces significant parasitic inductance—typically > 10 nH. In response, companies have developed advanced chip-level packaging for discrete GaN devices. EPC [263] uses line grid array (LGA) technology for low-voltage GaN devices, while GaN Systems [264] offers GaN *PX* technology for high-voltage GaN devices. Additionally, companies such as Infineon, InnoScience, Transphorm, and Navitas also widely adopt quad flat no-lead (DFN) or TO-leadless (TOLL) packages for their high-voltage discrete GaN devices.

In a typical half-bridge configuration, GaN power devices, drivers, decoupling capacitors, and magnetic components are increasingly being integrated to meet the demands for high power density and compact form factors, as required in applications like humanoid robots and eVTOLs.

To reduce parasitic inductance, wire-bondless designs based on planar interconnection technologies — including flip-chip [250], [265] and PCB-embedded packaging [258], [266], [267] — have been introduced. However, the thermal performance of PCB-embedded power modules is constrained by the limited density of electroplated copper pillars [267]. To address this limitation, PCB/ceramic hybrid substrate structures have been proposed. These structures combine the layout flexibility of PCBs, which helps minimize parasitic inductance, with the superior thermal conductivity of ceramic substrates [252], [253], [254], [255], [268], [269], [270]. The hybrid substrates differ in both the type of ceramic materials used and the associated manufacturing processes. To further improve thermal performance, double-sided cooling (DSC) using two ceramic substrates has been implemented, theoretically doubling the heat dissipation area [256], [257], [259], [271], [272]. The junction-to-ambient thermal resistance of the DSC GaN power module [256] is reduced by 30% to 48% compared to the bottom-sided cooling, depending on the heat transfer coefficient.

The pursuit of higher integration in power modules continues to advance, and packaging technologies are evolving toward wafer-level heterogeneous integration [256], [273], [274], [275] and device-level thermal management [276]. Additionally, it is important to note that designing a power module or a complete power electronics system is inherently a multidisciplinary, electro-thermal-mechanical co-design problem. It involves multi-objective optimization considering efficiency, power density, cost, and reliability, and thus requires a holistic and integrated design approach [277].

Furthermore, as GaN devices evolve toward kilovolt levels, the insulation capability of the packaging faces significant challenges [278], [279], particularly for lateral GaN HEMTs due to the limited prior experience for packaging very high voltage lateral power devices. For different applications, the priorities between power density (or parasitic inductance) and thermal management vary significantly, as summarized in Fig. 25. Applications with low power levels and high operating frequencies (e.g., VRM, LiDAR, robotics, and chargers) are primarily sensitive to integration level and power density. In contrast, high-power systems (e.g., EV drive, eVTOL, and SSCB) are more constrained by thermal management requirements. This mapping provides an intuitive perspective of how packaging priorities shift with application scenarios.

X. CONCLUSIONS

In summary, this article discusses the emerging landscape of GaN power devices and their applications "at the bottom and top"—not only extending beyond today's commercial voltage range into both low-voltage and high-voltage domains, but also

This work is licensed under a Creative Commons Attribution 4.0 License. For more information, see https://creativecommons.org/licenses/by/4.0/

This article has been accepted for publication in IEEE Transactions on Power Electronics. This is the author's version which has not been fully edited and content may change prior to final publication. Citation information: DOI 10.1109/TPEL.2026.3675006

encompassing innovations in integration, such as GaN BDS, and deployment in extreme environments like cryogenic and high-temperature systems.

Table IV summarizes the emerging applications, target voltage and current ranges, benefits of GaN devices, current demonstrations, and key challenges associated with each major category discussed. Many of these applications—ranging from AI processors and humanoid robots to quantum computing, eVTOLs, and spacecraft—represent rapidly growing sectors attracting significant investment and holding the potential to deliver foundational breakthroughs with profound societal impact. GaN power devices are uniquely positioned to serve as key enabling technologies in these transformative fields.

Addressing these diverse applications demands significant innovation in GaN device structures. For low-voltage domains, advanced architectures such as multi-gate and MOS-HEMTs offer opportunities to fully leverage GaN's material advantages. For high-voltage operation, multi-dimensional structures, including superjunction and multi-channel, show promise for scaling both lateral and vertical GaN technologies. The inherent bidirectionality of GaN BDS addresses the long-standing need for an ideal AC switch. Just as Si evolved into a versatile platform with a wide range of power device architectures, GaN holds the potential to become the "new Si", offering scalable solutions from a few volts to several kilovolts.

Finally, several critical aspects—though not detailed in this article—will be essential to the success of emerging GaN devices and applications. Ensuring long-term reliability and robustness remains a pressing research priority [2]. GaN's fast switching speeds introduce challenges in electromagnetic compatibility (EMC), necessitating advanced circuit design tools and new components for effective MHz-level EMI suppression [280]. Moreover, the development of robust, physics-based compact models is crucial for accurate circuit simulation and widespread adoption among power electronics designers. Together, these ongoing efforts will pave the way for GaN's transformation into a ubiquitous solution across the future of power electronics.

REFERENCES

[1] Y. Zhang, D. Dong, Q. Li, R. Zhang, F. Udrea, and H. Wang, "Wide-bandgap semiconductors and power electronics as pathways to carbon neutrality," *Nat. Rev. Electr. Eng.*, vol. 2, no. 3, pp. 155–172, Jan. 2025, doi: 10.1038/s44287-024-00135-5.

[2] J. P. Kozak *et al.*, "Stability, Reliability, and Robustness of GaN Power Devices: A Review," *IEEE Trans. Power Electron.*, vol. 38, no. 7, pp. 8442–8471, Jul. 2023, doi: 10.1109/TPEL.2023.3266365.

[3] "Power GaN device market growing at 59% CAGR to $2bn in 2027." Accessed: Jul. 26, 2025. [Online]. Available: https://www.semiconductor-today.com/news_items/2022/jun/yole-130622.shtml

[4] Z. Yang, Y. Qin, and Y. Zhang, "The renaissance of lateral power devices for high voltage applications," *APL Electron. Devices*, vol. 1, no. 3, p. 031502, Jul. 2025, doi: 10.1063/5.0278883.

[5] K. Hoo Teo *et al.*, "Emerging GaN technologies for power, RF, digital, and quantum computing applications: Recent advances and prospects," *J. Appl. Phys.*, vol. 130, no. 16, p. 160902, Oct. 2021, doi: 10.1063/5.0061555.

[6] Y. Zhang *et al.*, "GaN FinFETs and trigate devices for power and RF applications: review and perspective," *Semicond. Sci. Technol.*, vol. 36, no. 5, p. 054001, Mar. 2021, doi: 10.1088/1361-6641/abde17.

[7] H. W. Then *et al.*, "DrGaN: an Integrated CMOS Driver-GaN Power Switch Technology on 300mm GaN-on-Si with E-mode GaN MOSHEMT and 3D Monolithic Si PMOS," in *2023 International Electron Devices Meeting (IEDM)*, Dec. 2023, pp. 1–4. doi: 10.1109/IEDM45741.2023.10413680.

[8] M. Xiao *et al.*, "Multi-Channel Monolithic-Cascode HEMT (MC2-HEMT): A New GaN Power Switch up to 10 kV," in *2021 IEEE International Electron Devices Meeting (IEDM)*, Dec. 2021, p. 5.5.1-5.5.4. doi: 10.1109/IEDM19574.2021.9720714.

[9] J. Liu *et al.*, "1.2-kV Vertical GaN Fin-JFETs: High-Temperature Characteristics and Avalanche Capability," *IEEE Trans. Electron Devices*, vol. 68, no. 4, pp. 2025–2032, Apr. 2021, doi: 10.1109/TED.2021.3059192.

[10] J. Liu *et al.*, "1.2 kV Vertical GaN Fin JFETs with Robust Avalanche and Fast Switching Capabilities," in *2020 IEEE International Electron Devices Meeting (IEDM)*, Dec. 2020, p. 23.2.1-23.2.4. doi: 10.1109/IEDM13553.2020.9372048.

[11] R. Zhang, J. P. Kozak, M. Xiao, J. Liu, and Y. Zhang, "Surge-Energy and Overvoltage Ruggedness of P-Gate GaN HEMTs," *IEEE Trans. Power Electron.*, vol. 35, no. 12, pp. 13409–13419, Dec. 2020, doi: 10.1109/TPEL.2020.2993982.

[12] J. Huber and J. W. Kolar, "Monolithic Bidirectional Power Transistors," *IEEE Power Electron. Mag.*, vol. 10, no. 1, pp. 28–38, Mar. 2023, doi: 10.1109/MPEL.2023.3234747.

[13] E. A. Jones, F. F. Wang, and D. Costinett, "Review of Commercial GaN Power Devices and GaN-Based Converter Design Challenges," *IEEE J. Emerg. Sel. Top. Power Electron.*, vol. 4, no. 3, pp. 707–719, Sep. 2016, doi: 10.1109/JESTPE.2016.2582685.

[14] K. J. Chen *et al.*, "GaN-on-Si Power Technology: Devices and Applications," *IEEE Trans. Electron Devices*, vol. 64, no. 3, pp. 779–795, Mar. 2017, doi: 10.1109/TED.2017.2657579.

[15] R. Sun, J. Lai, W. Chen, and B. Zhang, "GaN Power Integration for High Frequency and High Efficiency Power Applications: A Review," *IEEE Access*, vol. 8, pp. 15529–15542, 2020, doi: 10.1109/ACCESS.2020.2967027.

[16] M. Buffolo *et al.*, "Review and Outlook on GaN and SiC Power Devices: Industrial State-of-the-Art, Applications, and Perspectives," *IEEE Trans. Electron Devices*, vol. 71, no. 3, pp. 1344–1355, Mar. 2024, doi: 10.1109/TED.2023.3346369.

[17] Y. Zhang, F. Udrea, and H. Wang, "Multidimensional device architectures for efficient power electronics," *Nat. Electron.*, vol. 5, no. 11, pp. 723–734, Nov. 2022, doi: 10.1038/s41928-022-00860-5.

[18] Y. Guo *et al.*, "10 kV E-mode GaN HEMT: Physics for breakdown voltage upscaling," *Appl. Phys. Lett.*, vol. 127, no. 4, p. 042102, Jul. 2025, doi: 10.1063/5.0279059.

[19] H. W. Then *et al.*, "3D heterogeneous integration of high performance high-K metal gate GaN NMOS and Si PMOS transistors on 300mm high-resistivity Si substrate for energy-efficient and compact power delivery, RF (5G and beyond) and SoC applications," in *2019 IEEE International Electron Devices Meeting (IEDM)*, Dec. 2019, p. 17.3.1-17.3.4. doi: 10.1109/IEDM19573.2019.8993583.

[20] H. W. Then *et al.*, "30nm Channel-Length Enhancement-Mode GaN MOSHEMT Transistors on a 300mm GaN-on-TRSOI Engineered Substrate," in *2024 IEEE International Electron Devices Meeting (IEDM)*, Dec. 2024, pp. 1–4. doi: 10.1109/IEDM50854.2024.10873306.

[21] H. W. Then *et al.*, "GaN and Si Transistors on 300mm Si(111) Enabled by 3D Monolithic Heterogeneous Integration," in *2020 IEEE Symposium on VLSI Technology*, Jun. 2020, pp. 1–2. doi: 10.1109/VLSITechnology18217.2020.9265093.

[22] H. W. Then *et al.*, "Advanced Scaling of Enhancement Mode High-K Gallium Nitride-on-300mm-Si(111) Transistor and 3D Layer Transfer GaN-Silicon Finfet CMOS Integration," in *2021 IEEE International Electron Devices Meeting (IEDM)*, Dec. 2021, p. 11.1.1-11.1.4. doi: 10.1109/IEDM19574.2021.9720710.

[23] H. W. Then *et al.*, "Scaled Submicron Field-Plated Enhancement Mode High-K Gallium Nitride Transistors on 300mm Si(111) Wafer with Power FoM (RON xQGG) of 3.1 mohm-nC at 40V and fT/fMAX of 130/680GHz," in *2022 International Electron Devices Meeting (IEDM)*, Dec. 2022, p. 35.1.1-35.1.4. doi: 10.1109/IEDM45625.2022.10019373.

[24] H. W. Then *et al.*, "Gallium Nitride and Silicon Transistors on 300 mm Silicon Wafers Enabled by 3-D Monolithic Heterogeneous Integration," *IEEE Trans. Electron Devices*, vol. 67, no. 12, pp. 5306–5314, Dec. 2020, doi: 10.1109/TED.2020.3034076.

This work is licensed under a Creative Commons Attribution 4.0 License. For more information, see https://creativecommons.org/licenses/by/4.0/

This article has been accepted for publication in IEEE Transactions on Power Electronics. This is the author's version which has not been fully edited and content may change prior to final publication. Citation information: DOI 10.1109/TPEL.2026.3675006

[25] S. J. Bader *et al.*, "Prospects for Wide Bandgap and Ultrawide Bandgap CMOS Devices," *IEEE Trans. Electron Devices*, vol. 67, no. 10, pp. 4010–4020, Oct. 2020, doi: 10.1109/TED.2020.3010471.

[26] C. Beckmann *et al.*, "Depletion- and Enhancement-Mode p-Channel MISHFET Based on GaN/AlGaN Single Heterostructures on Sapphire Substrates," *IEEE J. Electron Devices Soc.*, vol. 11, pp. 248–255, 2023, doi: 10.1109/JEDS.2023.3268205.

[27] Z. Zheng, W. Song, L. Zhang, S. Yang, J. Wei, and K. J. Chen, "High I_\textON and I_\textON / I_\textOFF Ratio Enhancement-Mode Buried p -Channel GaN MOSFETs on p -GaN Gate Power HEMT Platform," *IEEE Electron Device Lett.*, vol. 41, no. 1, pp. 26–29, Jan. 2020, doi: 10.1109/LED.2019.2954035.

[28] Q. Xie *et al.*, "Highly-Scaled Self-Aligned GaN Complementary Technology on a GaN-on-Si Platform," in *2022 International Electron Devices Meeting (IEDM)*, Dec. 2022, p. 35.3.1-35.3.4. doi: 10.1109/IEDM45625.2022.10019401.

[29] Z. Zheng *et al.*, "Gallium nitride-based complementary logic integrated circuits," *Nat. Electron.*, vol. 4, no. 8, pp. 595–603, Aug. 2021, doi: 10.1038/s41928-021-00611-y.

[30] N. Chowdhury, Q. Xie, M. Yuan, K. Cheng, H. W. Then, and T. Palacios, "Regrowth-Free GaN-Based Complementary Logic on a Si Substrate," *IEEE Electron Device Lett.*, vol. 41, no. 6, pp. 820–823, Jun. 2020, doi: 10.1109/LED.2020.2987003.

[31] H. Hahn *et al.*, "First monolithic integration of GaN-based enhancement mode n-channel and p-channel heterostructure field effect transistors," in *72nd Device Research Conference*, Jun. 2014, pp. 259–260. doi: 10.1109/DRC.2014.6872396.

[32] D. Reusch, J. Strydom, and A. Lidow, "Monolithic Integration of GaN Transistors for Higher Efficiency and Power Density in DC-DC Converters," in *Proceedings of PCIM Europe 2015; International Exhibition and Conference for Power Electronics, Intelligent Motion, Renewable Energy and Energy Management*, May 2015, pp. 1–8. Accessed: Mar. 15, 2025. [Online]. Available: https://ieeexplore.ieee.org/document/7149125/?arnumber=7149125

[33] Y. Ma *et al.*, "Tri-gate GaN junction HEMT," *Appl. Phys. Lett.*, vol. 117, no. 14, p. 143506, Oct. 2020, doi: 10.1063/5.0025351.

[34] Y. Ma, M. Xiao, Z. Du, H. Wang, and Y. Zhang, "Tri-Gate GaN Junction HEMTs: Physics and Performance Space," *IEEE Trans. Electron Devices*, vol. 68, no. 10, pp. 4854–4861, Oct. 2021, doi: 10.1109/TED.2021.3103157.

[35] P. D. Ye *et al.*, "GaN metal-oxide-semiconductor high-electron-mobility-transistor with atomic layer deposited Al2O3 as gate dielectric," *Appl. Phys. Lett.*, vol. 86, no. 6, p. 063501, Jan. 2005, doi: 10.1063/1.1861122.

[36] G. Lükens, "Normally-off Transistor Topologies in Gallium Nitride Technology," 2020. doi: 10.18154/RWTH-2020-06120.

[37] Y. C. Chang *et al.*, "Structural and electrical characteristics of atomic layer deposited high κ HfO2 on GaN," *Appl. Phys. Lett.*, vol. 90, no. 23, p. 232904, Jun. 2007, doi: 10.1063/1.2746057.

[38] N. Donato, N. Rouger, J. Pernot, G. Longobardi, and F. Udrea, "Diamond power devices: state of the art, modelling, figures of merit and future perspective," *J. Phys. Appl. Phys.*, vol. 53, no. 9, p. 093001, Dec. 2019, doi: 10.1088/1361-6463/ab4eab.

[39] H. Wui Then *et al.*, "Advances in Research on 300mm Gallium Nitride-on-Si(111) NMOS Transistor and Silicon CMOS Integration," in *2020 IEEE International Electron Devices Meeting (IEDM)*, Dec. 2020, p. 27.3.1-27.3.4. doi: 10.1109/IEDM13553.2020.9371977.

[40] "Powering Intelligence: Analyzing Artificial Intelligence and Data Center Energy Consumption." Accessed: Jul. 26, 2025. [Online]. Available: https://www.epri.com/research/products/3002028905

[41] X. Xu and Q. Li, "Symmetric Series-Capacitor Buck in 48V-to-12V Regulated Conversion for High-Performance Server Boards," in *2024 IEEE Energy Conversion Congress and Exposition (ECCE)*, Oct. 2024, pp. 2583–2588. doi: 10.1109/ECCE55643.2024.10861830.

[42] "BMR351 series." Accessed: Jul. 26, 2025. [Online]. Available: https://flexpowermodules.com/products/bmr351

[43] "Greatly Increase the Efficiency of the Regulated 48 V to 12 V First Stage | Analog Devices." Accessed: Jul. 26, 2025. [Online]. Available: https://www.analog.com/en/resources/technical-articles/greatly-increase-the-efficiency-of-the-regulated-48v-to-12v-first-stage.html

[44] P. Sandri and S. Clara, "Novel 54-V To 12-V Buck Topology Eases Efficient Power Delivery In Data Centers".

[45] "DC2787A Evaluation Board | Analog Devices." Accessed: Jul. 26, 2025. [Online]. Available: https://www.analog.com/en/resources/evaluation-hardware-and-software/evaluation-boards-kits/dc2787a.html

[46] S. Jiang, S. Saggini, C. Nan, X. Li, C. Chung, and M. Yazdani, "Switched Tank Converters," *IEEE Trans. Power Electron.*, vol. 34, no. 6, pp. 5048–5062, Jun. 2019, doi: 10.1109/TPEL.2018.2868447.

[47] "EVMPC12106-54-02A." Accessed: Jul. 26, 2025. [Online]. Available: https://www.monolithicpower.com/en/evmpc12106-54-02a.html

[48] X. Yu, J. Feng, L. Zhu, and Q. Li, "Design and Optimization of a Planar Omnidirectional Wireless Power Transfer System for Consumer Electronics," *IEEE Open J. Power Electron.*, vol. 5, pp. 311–322, 2024, doi: 10.1109/OJPEL.2024.3360878.

[49] X. Yu, J. Feng, and Q. Li, "A Planar Omnidirectional Wireless Power Transfer Platform for Portable Devices," in *2023 IEEE Applied Power Electronics Conference and Exposition (APEC)*, Mar. 2023, pp. 1654–1661. doi: 10.1109/APEC43580.2023.10131566.

[50] M. Wu *et al.*, "A Compact Coupler With Integrated Multiple Decoupled Coils for Wireless Power Transfer System and its Anti-Misalignment Control," *IEEE Trans. Power Electron.*, vol. 37, no. 10, pp. 12814–12827, Oct. 2022, doi: 10.1109/TPEL.2022.3166888.

[51] X. Xu and Q. Li, "Single-Stage 48V-to-1V Regulator with a Half-Turn Transformer and Current-Doubler Rectifier," in *2025 IEEE Applied Power Electronics Conference and Exposition (APEC)*, Mar. 2025, pp. 1433–1438. doi: 10.1109/APEC48143.2025.10977417.

[52] Y. Zhu, T. Ge, N. M. Ellis, L. Horowitz, and R. C. N. Pilawa-Podgurski, "The Switching Bus Converter: A High-Performance 48-V-to-1-V Architecture With Increased Switched-Capacitor Conversion Ratio," *IEEE Trans. Power Electron.*, vol. 39, no. 7, pp. 8384–8403, Jul. 2024, doi: 10.1109/TPEL.2024.3370166.

[53] P. Wang, Y. Chen, G. Szczeszynski, S. Allen, D. M. Giuliano, and M. Chen, "MSC-PoL: Hybrid GaN–Si Multistacked Switched-Capacitor 48-V PwrSiP VRM for Chiplets," *IEEE Trans. Power Electron.*, vol. 38, no. 10, pp. 12815–12833, Oct. 2023, doi: 10.1109/TPEL.2023.3293022.

[54] Y. Tong, H. Liu, and Z. Zhang, "Advancements in Humanoid Robots: A Comprehensive Review and Future Prospects," *IEEECAA J. Autom. Sin.*, vol. 11, no. 2, pp. 301–328, Feb. 2024, doi: 10.1109/JAS.2023.124140.

[55] S. Saeedvand, M. Jafari, H. S. Aghdasi, and J. Baltes, "A comprehensive survey on humanoid robot development," *Knowl. Eng. Rev.*, vol. 34, p. e20, Jan. 2019, doi: 10.1017/S0269888919000158.

[56] R. and M. ltd, "Humanoid Robots Market Industry Trends and Global Forecasts to 2035: Distribution by Type of Component, Areas of Application, Type of Motion, Type of Technology, Type of Functionality, Type of End User, Company Size, Type of Business Model and Key Geographical Regions." Accessed: Jul. 21, 2025. [Online]. Available: https://www.researchandmarkets.com/reports/6089567/humanoid-robots-market-industry-trends-global

[57] L. Cao, "AI Robots and Humanoid AI: Review, Perspectives and Directions".

[58] T. Wang, P. Zheng, S. Li, and L. Wang, "Multimodal Human–Robot Interaction for Human-Centric Smart Manufacturing: A Survey," *Adv. Intell. Syst.*, vol. 6, no. 3, p. 2300359, 2024, doi: 10.1002/aisy.202300359.

[59] A. Mortezapour and G. Vitiello, "Human-centered AI with focus on Human-robot interaction (Book chapter)," Jul. 05, 2025, *arXiv*: arXiv:2507.04095. doi: 10.48550/arXiv.2507.04095.

[60] B. K. Bose, "Power Electronics and Motor Drives Recent Progress and Perspective," *IEEE Trans. Ind. Electron.*, vol. 56, no. 2, pp. 581–588, Feb. 2009, doi: 10.1109/TIE.2008.2002726.

[61] W. Yang, Z. Tong, J. Huang, R. P. Martins, and Y. Lu, "A Bi-Directional Dual-Path Boost-48V-Buck Hybrid Converter for High-Voltage Power-Transmission Cable in Light-Weight Humanoid Robots," in *2025 IEEE International Solid-State Circuits Conference (ISSCC)*, Feb. 2025, pp. 194–196. doi: 10.1109/ISSCC49661.2025.10904797.

[62] C. Hardy and H.-P. Le, "8.3 A 10.9W 93.4%-Efficient (27W 97%-Efficient) Flying-Inductor Hybrid DC-DC Converter Suitable for 1-Cell (2-Cell) Battery Charging Applications," in *2019 IEEE*

This work is licensed under a Creative Commons Attribution 4.0 License. For more information, see https://creativecommons.org/licenses/by/4.0/

This article has been accepted for publication in IEEE Transactions on Power Electronics. This is the author's version which has not been fully edited and content may change prior to final publication. Citation information: DOI 10.1109/TPEL.2026.3675006

International Solid-State Circuits Conference - (ISSCC), Feb. 2019, pp. 150–152. doi: 10.1109/ISSCC.2019.8662432.

[63] J. Jin, Y. Zhou, C. Chen, X. Han, W. Xu, and L. Cheng, "30.6 A 98.6%-Peak-Efficiency 1.47A/mm2-Current-Density Buck-Boost Converter with Always Reduced Conduction Loss," in *2023 IEEE International Solid-State Circuits Conference (ISSCC)*, Feb. 2023, pp. 448–450. doi: 10.1109/ISSCC42615.2023.10067471.

[64] J. Oh, D. Hanson, W. Kim, Y. Han, J. Kim, and I. Park, "Design of Android type Humanoid Robot Albert HUBO," in *2006 IEEE/RSJ International Conference on Intelligent Robots and Systems*, Oct. 2006, pp. 1428–1433. doi: 10.1109/IROS.2006.281935.

[65] "The Role of Gallium Nitride Power Transistors and Integrated Circuits in the Emerging Humanoid Robot Market.pdf." Accessed: Jul. 21, 2025. [Online]. Available: https://www.bodospower.com/pdf/bp_article_2258.pdf

[66] E. Tian and K. Wolf, "Application of GaN FET in Humanoid Robots," 2025.

[67] M. Guacci, D. Bortis, and J. W. Kolar, "High-Efficiency Weight-Optimized Fault-Tolerant Modular Multi-Cell Three-Phase GaN Inverter for Next Generation Aerospace Applications," in *2018 IEEE Energy Conversion Congress and Exposition (ECCE)*, Sep. 2018, pp. 1334–1341. doi: 10.1109/ECCE.2018.8557754.

[68] M. Schiestl, A. Albrecht, M. Incurvati, E. A. Jones, and R. Staerz, "Compact Highly Integrated 1kW Peak Motor Drive," in *PCIM Conference 2025; International Exhibition and Conference for Power Electronics, Intelligent Motion, Renewable Energy and Energy Management*, May 2025, pp. 664–671. doi: 10.30420/566541082.

[69] G. T.-F. Unnia, "Inside the Joint: How GaN ICs Enable Ultra-Compact Motor Drives for Humanoid Robots," Efficient Power Conversion Corporation. Accessed: Oct. 23, 2025. [Online]. Available: https://epc-co.com/epc/about-epc/gan-talk-blog/post/25815/inside-the-joint-how-gan-ics-enable-ultra-compact-motor-drives-for-humanoid-robots

[70] "Highest power density for DCDC converters demonstrated | Infineon Technologies." Accessed: Jul. 27, 2025. [Online]. Available: https://www.infineon.com/market-news/2024/infpss202408-134

[71] "Full-Bridge DC-DC Converter with Synchronous Rectification Based on GaN Transistors." Accessed: Jul. 27, 2025. [Online]. Available: https://www.mdpi.com/2079-9268/15/2/25

[72] M. Fu, C. Fei, Y. Yang, Q. Li, and F. C. Lee, "A Two-Stage Rail Grade DC/DC Converter Based on GaN Device," in *2019 IEEE Applied Power Electronics Conference and Exposition (APEC)*, Mar. 2019, pp. 2110–2114. doi: 10.1109/APEC.2019.8722095.

[73] F. Xue, R. Yu, and A. Q. Huang, "A 98.3% Efficient GaN Isolated Bidirectional DC–DC Converter for DC Microgrid Energy Storage System Applications," *IEEE Trans. Ind. Electron.*, vol. 64, no. 11, pp. 9094–9103, Nov. 2017, doi: 10.1109/TIE.2017.2686307.

[74] "Compact 1 kW GaN motor drive for humanoid robot arms." Accessed: Jul. 26, 2025. [Online]. Available: https://www.infineon.com/cms/en/applications/robotics/

[75] "GaN for Humanoid Robots: Smarter, Faster, and More Efficient Humanoid Robots with GaN | EPC." Accessed: Aug. 03, 2025. [Online]. Available: https://epc-co.com/epc/gallium-nitride/gan-for-humanoid-robots

[76] N. Mehendale and S. Neoge, "Review on Lidar Technology," May 18, 2020, *Social Science Research Network, Rochester, NY*: 3604309. doi: 10.2139/ssrn.3604309.

[77] "GaN Transistors for Efficient Power Conversion | Wiley eBooks | IEEE Xplore." Accessed: Jul. 26, 2025. [Online]. Available: https://ieeexplore-ieee-org.eproxy.lib.hku.hk/book/10523181

[78] C.-W. Zhuang *et al.*, "Monolithic FET-Controlled GaN Driver with Pre-Boosting and Robust Dead Time Control for DToF LiDAR Application," in *2023 35th International Symposium on Power Semiconductor Devices and ICs (ISPSD)*, May 2023, pp. 80–83. doi: 10.1109/ISPSD57135.2023.10147581.

[79] A. Lidow and J. Glaser, "GaN-based Solutions for Cost-effective Direct and Indirect Time-of-Flight Lidar Transmitters are Changing the Way We Live," in *2022 International Power Electronics Conference (IPEC-Himeji 2022- ECCE Asia)*, May 2022, pp. 637–643. doi: 10.23919/IPEC-Himeji2022-ECCE53331.2022.9806849.

[80] A. Wehr and U. Lohr, "Airborne laser scanning—an introduction and overview," *ISPRS J. Photogramm. Remote Sens.*, vol. 54, no. 2, pp. 68–82, Jul. 1999, doi: 10.1016/S0924-2716(99)00011-8.

[81] "Optimization of eyesafe avalanche photodiode lidar for automobile safety and autonomous navigation systems." Accessed: Jul. 26, 2025. [Online]. Available: https://www.spiedigitallibrary.org/journals/optical-engineering/volume-56/issue-3/031224/Optimization-of-eyesafe-avalanche-photodiode-lidar-for-automobile-safety-and/10.1117/1.OE.56.3.031224.full

[82] "P0177-Lidar-Effective-Range.pdf." Accessed: Jul. 26, 2025. [Online]. Available: https://cdn.specpick.com/images/photonics/whitepapers/P0177-Lidar-Effective-Range.pdf

[83] J. Glaser, "How GaN Power Transistors Drive High-Performance Lidar: Generating ultrafast pulsed power with GaN FETs," *IEEE Power Electron. Mag.*, vol. 4, no. 1, pp. 25–35, Mar. 2017, doi: 10.1109/MPEL.2016.2643099.

[84] J. S. Glaser, "Kilowatt Laser Driver with 120 A, sub-10 nanosecond pulses in < 3 cm^2 using an GaN FET," in *PCIM Asia 2018; International Exhibition and Conference for Power Electronics, Intelligent Motion, Renewable Energy and Energy Management*, Jun. 2018, pp. 1–6. Accessed: Jul. 26, 2025. [Online]. Available: https://ieeexplore.ieee.org/abstract/document/8470507

[85] G. Gupta *et al.*, "1200V GaN Switches on Sapphire Substrate," in *2022 IEEE 34th International Symposium on Power Semiconductor Devices and ICs (ISPSD)*, May 2022, pp. 349–352. doi: 10.1109/ISPSD49238.2022.9813640.

[86] G. Gupta *et al.*, "1200V GaN Switches on Sapphire: A low-cost, high-performance platform for EV and industrial applications," in *2022 International Electron Devices Meeting (IEDM)*, Dec. 2022, p. 35.2.1-35.2.4. doi: 10.1109/IEDM45625.2022.10019381.

[87] K. Varadarajan *et al.*, "Reaching Beyond 1200 V: Lateral GaN HEMTs for High-Reliability EV and Industrial Applications," in *PCIM Europe 2024; International Exhibition and Conference for Power Electronics, Intelligent Motion, Renewable Energy and Energy Management*, Jun. 2024, pp. 1593–1598. doi: 10.30420/566262217.

[88] V. Odnoblyudov, C. Basceri, and S. Farrens, "Engineered substrate structure for power and RF applications," US10297445B2, May 21, 2019 Accessed: Jun. 14, 2025. [Online]. Available: https://patents.google.com/patent/US10297445B2/en

[89] "Shin-Etsu Chemical to develop QST substrate for 300mm GaN." Accessed: Jun. 14, 2025. [Online]. Available: https://www.semiconductor-today.com/news_items/2024/sep/shinetsuchemical-090924.shtml

[90] S. Kumar *et al.*, "1.2 kV Enhancement-Mode p-GaN Gate HEMTs on 200 mm Engineered Substrates," *IEEE Electron Device Lett.*, vol. 45, no. 4, pp. 657–660, Apr. 2024, doi: 10.1109/LED.2024.3361164.

[91] M. Yanagihara, Y. Uemoto, T. Ueda, T. Tanaka, and D. Ueda, "Recent advances in GaN transistors for future emerging applications," *Phys. Status Solidi A*, vol. 206, no. 6, pp. 1221–1227, 2009, doi: 10.1002/pssa.200880968.

[92] H. Kawai *et al.*, "Low cost high voltage GaN polarization superjunction field effect transistors," *Phys. Status Solidi A*, vol. 214, no. 8, p. 1600834, 2017, doi: 10.1002/pssa.201600834.

[93] A. Sheikhan, E. M. S. Narayanan, H. Kawai, S. Yagi, and H. Narui, "Evaluation of a 1200 V Polarization Super Junction GaN Field-Effect Transistor in Cascode Configuration," *Electronics*, vol. 14, no. 3, Art. no. 3, Jan. 2025, doi: 10.3390/electronics14030624.

[94] A. Sheikhan, E. M. Sankara Narayanan, H. Kawai, S. Yagi, and H. Narui, "Evaluation of a 3 kV Polarization Superjunction GaN HEMT," in *PCIM Europe 2024; International Exhibition and Conference for Power Electronics, Intelligent Motion, Renewable Energy and Energy Management*, Jun. 2024, pp. 549–556. doi: 10.30420/566262068.

[95] M. Xiao, Y. Ma, K. Liu, K. Cheng, and Y. Zhang, "10 kV, 39 mΩ·cm2 Multi-Channel AlGaN/GaN Schottky Barrier Diodes," *IEEE Electron Device Lett.*, vol. 42, no. 6, pp. 808–811, Jun. 2021, doi: 10.1109/LED.2021.3076802.

[96] M. Xiao *et al.*, "3.3 kV Multi-Channel AlGaN/GaN Schottky Barrier Diodes With P-GaN Termination," *IEEE Electron Device Lett.*, vol. 41, no. 8, pp. 1177–1180, Aug. 2020, doi: 10.1109/LED.2020.3005934.

[97] M. Xiao *et al.*, "5 kV Multi-Channel AlGaN/GaN Power Schottky Barrier Diodes with Junction-Fin-Anode," in *2020 IEEE International Electron Devices Meeting (IEDM)*, Dec. 2020, p. 5.4.1-5.4.4. doi: 10.1109/IEDM13553.2020.9372025.

This work is licensed under a Creative Commons Attribution 4.0 License. For more information, see https://creativecommons.org/licenses/by/4.0/

This article has been accepted for publication in IEEE Transactions on Power Electronics. This is the author's version which has not been fully edited and content may change prior to final publication. Citation information: DOI 10.1109/TPEL.2026.3675006

[98] J. Hu, Y. Zhang, M. Sun, D. Piedra, N. Chowdhury, and T. Palacios, "Materials and processing issues in vertical GaN power electronics," *Mater. Sci. Semicond. Process.*, vol. 78, pp. 75–84, May 2018, doi: 10.1016/j.mssp.2017.09.033.

[99] Y. Zhang and T. Palacios, "(Ultra)Wide-Bandgap Vertical Power FinFETs," *IEEE Trans. Electron Devices*, vol. 67, no. 10, pp. 3960–3971, Oct. 2020, doi: 10.1109/TED.2020.3002880.

[100] Y. Zhang *et al.*, "Electrothermal Simulation and Thermal Performance Study of GaN Vertical and Lateral Power Transistors," *IEEE Trans. Electron Devices*, vol. 60, no. 7, pp. 2224–2230, Jul. 2013, doi: 10.1109/TED.2013.2261072.

[101] T. Oka, "Recent development of vertical GaN power devices," *Jpn. J. Appl. Phys.*, vol. 58, no. SB, p. SB0805, Apr. 2019, doi: 10.7567/1347-4065/ab02e7.

[102] B. Wang *et al.*, "Chip Size Minimization for Wide and Ultrawide Bandgap Power Devices," *IEEE Trans. Electron Devices*, vol. 70, no. 2, pp. 633–639, Feb. 2023, doi: 10.1109/TED.2022.3232309.

[103] Y. Qin *et al.*, "Thermal management and packaging of wide and ultra-wide bandgap power devices: a review and perspective," *J. Phys. Appl. Phys.*, vol. 56, no. 9, p. 093001, Feb. 2023, doi: 10.1088/1361-6463/acb4ff.

[104] X. Yang *et al.*, "Dynamic RON Free 1.2-kV Vertical GaN JFET," *IEEE Trans. Electron Devices*, vol. 71, no. 1, pp. 720–726, Jan. 2024, doi: 10.1109/TED.2023.3338140.

[105] Y. Zhang, A. Dadgar, and T. Palacios, "Gallium nitride vertical power devices on foreign substrates: a review and outlook," *J. Phys. Appl. Phys.*, vol. 51, no. 27, p. 273001, Jun. 2018, doi: 10.1088/1361-6463/aac8aa.

[106] T. Paskova and K. R. Evans, "GaN Substrates—Progress, Status, and Prospects," *IEEE J. Sel. Top. Quantum Electron.*, vol. 15, no. 4, pp. 1041–1052, Jul. 2009, doi: 10.1109/JSTQE.2009.2015057.

[107] T. Paskova, D. A. Hanser, and K. R. Evans, "GaN Substrates for III-Nitride Devices," *Proc. IEEE*, vol. 98, no. 7, pp. 1324–1338, Jul. 2010, doi: 10.1109/JPROC.2009.2030699.

[108] Y. Qin *et al.*, "1 kV GaN-on-Si Quasi-Vertical Schottky Rectifier," *IEEE Electron Device Lett.*, vol. 44, no. 7, pp. 1052–1055, Jul. 2023, doi: 10.1109/LED.2023.3282025.

[109] J. Liu *et al.*, "1.2 kV Vertical GaN Fin JFETs with Robust Avalanche and Fast Switching Capabilities," in *2020 IEEE International Electron Devices Meeting (IEDM)*, Dec. 2020, p. 23.2.1-23.2.4. doi: 10.1109/IEDM13553.2020.9372048.

[110] Y. Zhang and T. Palacios, "(Ultra)Wide-Bandgap Vertical Power FinFETs," *IEEE Trans. Electron Devices*, vol. 67, no. 10, pp. 3960–3971, Oct. 2020, doi: 10.1109/TED.2020.3002880.

[111] H. Fu, K. Fu, S. Chowdhury, T. Palacios, and Y. Zhao, "Vertical GaN Power Devices: Device Principles and Fabrication Technologies—Part II," *IEEE Trans. Electron Devices*, vol. 68, no. 7, pp. 3212–3222, Jul. 2021, doi: 10.1109/TED.2021.3083209.

[112] H. Otake, K. Chikamatsu, A. Yamaguchi, T. Fujishima, and H. Ohta, "Vertical GaN-Based Trench Gate Metal Oxide Semiconductor Field-Effect Transistors on GaN Bulk Substrates," *Appl. Phys. Express*, vol. 1, no. 1, p. 011105, Jan. 2008, doi: 10.1143/APEX.1.011105.

[113] T. Oka, Y. Ueno, T. Ina, and K. Hasegawa, "Vertical GaN-based trench metal oxide semiconductor field-effect transistors on a free-standing GaN substrate with blocking voltage of 1.6 kV," *Appl. Phys. Express*, vol. 7, no. 2, p. 021002, Jan. 2014, doi: 10.7567/APEX.7.021002.

[114] T. Oka, T. Ina, Y. Ueno, and J. Nishii, "1.8 mΩ·cm2 vertical GaN-based trench metal–oxide–semiconductor field-effect transistors on a free-standing GaN substrate for 1.2-kV-class operation," *Appl. Phys. Express*, vol. 8, no. 5, p. 054101, Apr. 2015, doi: 10.7567/APEX.8.054101.

[115] D. Ji *et al.*, "Demonstrating >1.4 kV OG-FET performance with a novel double field-plated geometry and the successful scaling of large-area devices," in *2017 IEEE International Electron Devices Meeting (IEDM)*, Dec. 2017, p. 9.4.1-9.4.4. doi: 10.1109/IEDM.2017.8268359.

[116] R. Zhang *et al.*, "Robust Through-Fin Avalanche in Vertical GaN Fin-JFET With Soft Failure Mode," *IEEE Electron Device Lett.*, vol. 43, no. 3, pp. 366–369, Mar. 2022, doi: 10.1109/LED.2022.3144698.

[117] J. Liu *et al.*, "Tuning Avalanche Path in Vertical GaN JFETs By Gate Driver Design," *IEEE Trans. Power Electron.*, vol. 37, no. 5, pp. 5433–5443, May 2022, doi: 10.1109/TPEL.2021.3132906.

[118] X. Yang *et al.*, "Evaluation and MHz Converter Application of 1.2-kV Vertical GaN JFET," *IEEE Trans. Power Electron.*, vol. 39, no. 12, pp. 15720–15731, Dec. 2024, doi: 10.1109/TPEL.2024.3445667.

[119] R. Zhang *et al.*, "Breakthrough Short Circuit Robustness Demonstrated in Vertical GaN Fin JFET," *IEEE Trans. Power Electron.*, vol. 37, no. 6, pp. 6253–6258, Jun. 2022, doi: 10.1109/TPEL.2021.3138451.

[120] X. Li *et al.*, "Demonstration of >8-kV GaN HEMTs With CMOS-Compatible Manufacturing on 6-in Sapphire Substrates for Medium-Voltage Applications," *IEEE Trans. Electron Devices*, vol. 71, no. 6, pp. 3989–3993, Jun. 2024, doi: 10.1109/TED.2024.3392175.

[121] X. Li *et al.*, "1700 V High-Performance GaN HEMTs on 6-inch Sapphire With 1.5 µm Thin Buffer," *IEEE Electron Device Lett.*, vol. 45, no. 1, pp. 84–87, Jan. 2024, doi: 10.1109/LED.2023.3335393.

[122] J. T. Kemmerling *et al.*, "GaN Super-Heterojunction FETs With 10-kV Blocking and 3-kV Dynamic Switching," *IEEE Trans. Electron Devices*, vol. 71, no. 2, pp. 1153–1159, Feb. 2024, doi: 10.1109/TED.2023.3346356.

[123] Y. Guo *et al.*, "10 kV GaN Enhancement-Mode HEMT on a Standard P-GaN/AlGaN/GaN Wafer," *Appl. Phys. Lett.*, Under Review.

[124] J. Cui *et al.*, "6500-V E-mode Active-Passivation p-GaN Gate HEMT with Ultralow Dynamic RON," in *2023 International Electron Devices Meeting (IEDM)*, Dec. 2023, pp. 1–4. doi: 10.1109/IEDM45741.2023.10413742.

[125] J. Yang *et al.*, "10-kV E-mode GaN Lateral Superjunction Transistor," in *2024 IEEE International Electron Devices Meeting (IEDM)*, Dec. 2024, pp. 1–4. doi: 10.1109/IEDM50854.2024.10873570.

[126] L. Nela *et al.*, "Multi-channel nanowire devices for efficient power conversion," *Nat. Electron.*, vol. 4, no. 4, pp. 284–290, Apr. 2021, doi: 10.1038/s41928-021-00550-8.

[127] S. Chowdhury, B. L. Swenson, and U. K. Mishra, "Enhancement and Depletion Mode AlGaN/GaN CAVET With Mg-Ion-Implanted GaN as Current Blocking Layer," *IEEE Electron Device Lett.*, vol. 29, no. 6, pp. 543–545, Jun. 2008, doi: 10.1109/LED.2008.922982.

[128] D. Shibata *et al.*, "1.7 kV/1.0 mΩcm2 normally-off vertical GaN transistor on GaN substrate with regrown p-GaN/AlGaN/GaN semipolar gate structure," in *2016 IEEE International Electron Devices Meeting (IEDM)*, Dec. 2016, p. 10.1.1-10.1.4. doi: 10.1109/IEDM.2016.7838385.

[129] Y. Zhang *et al.*, "Large-Area 1.2-kV GaN Vertical Power FinFETs With a Record Switching Figure of Merit," *IEEE Electron Device Lett.*, vol. 40, no. 1, pp. 75–78, Jan. 2019, doi: 10.1109/LED.2018.2880306.

[130] X. Hu, J. Han, X. Tang, and X. Lin, "Powertrain Design and Control in Electrified Vehicles: A Critical Review," *IEEE Trans. Transp. Electrification*, vol. 7, no. 3, pp. 1990–2009, Sep. 2021, doi: 10.1109/TTE.2021.3056432.

[131] G. Wu, X. Zhang, and Z. Dong, "Powertrain architectures of electrified vehicles: Review, classification and comparison," *J. Frankl. Inst.*, vol. 352, no. 2, pp. 425–448, Feb. 2015, doi: 10.1016/j.jfranklin.2014.04.018.

[132] C. Jung, "Power Up with 800-V Systems: The benefits of upgrading voltage power for battery-electric passenger vehicles," *IEEE Electrification Mag.*, vol. 5, no. 1, pp. 53–58, Mar. 2017, doi: 10.1109/MELE.2016.2644560.

[133] R. Pradhan, N. Keshmiri, and A. Emadi, "On-Board Chargers for High-Voltage Electric Vehicle Powertrains: Future Trends and Challenges," *IEEE Open J. Power Electron.*, vol. 4, pp. 189–207, 2023, doi: 10.1109/OJPEL.2023.3251992.

[134] "TP65H015G5WS - 650V 15mΩ SuperGaN FET in TO-247 | Renesas." Accessed: Nov. 06, 2025. [Online]. Available: https://www.renesas.com/en/products/tp65h015g5ws

[135] "22mΩ 650V D^{3}GaN^{TM} Power FET," VisIC Technologies. Accessed: Nov. 06, 2025. [Online]. Available: https://visic-tech.com/22mω-650v-d3gantm-power-fet/

[136] E. Jalalabadi, X. Wang, J. Rubinic, Y. Jiao, and L. Lu, "7.2 kW GaN-Based DAB Converter with 37 kW/L Power Density and High Efficiency," in *2025 IEEE Applied Power Electronics Conference and Exposition (APEC)*, Mar. 2025, pp. 416–422. doi: 10.1109/APEC48143.2025.10977482.

[137] S. Mukherjee, J. M. Ruiz, and P. Barbosa, "A High Power Density Wide Range DC–DC Converter for Universal Electric Vehicle Charging," *IEEE Trans. Power Electron.*, vol. 38, no. 2, pp. 1998–2012, Feb. 2023, doi: 10.1109/TPEL.2022.3217092.

This work is licensed under a Creative Commons Attribution 4.0 License. For more information, see https://creativecommons.org/licenses/by/4.0/

This article has been accepted for publication in IEEE Transactions on Power Electronics. This is the author's version which has not been fully edited and content may change prior to final publication. Citation information: DOI 10.1109/TPEL.2026.3675006

[138] B. Li, Q. Li, F. C. Lee, Z. Liu, and Y. Yang, "A High-Efficiency High-Density Wide-Bandgap Device-Based Bidirectional On-Board Charger," *IEEE J. Emerg. Sel. Top. Power Electron.*, vol. 6, no. 3, pp. 1627–1636, Sep. 2018, doi: 10.1109/JESTPE.2018.2845846.

[139] F. Jin, A. Nabih, Z. Li, and Q. Li, "A Scalable Matrix Integrated Transformer With Controllable Leakage Inductance for a Bi-Directional Resonant Converter," *IEEE Trans. Power Electron.*, vol. 38, no. 9, pp. 10967–10984, Sep. 2023, doi: 10.1109/TPEL.2023.3270400.

[140] T. Yuan, F. Jin, and Q. Li, "Analysis and Comparison of Integrated Planar Transformers for 22-kW On-board Chargers," *IEEE Trans. Power Electron.*, pp. 1–19, 2024, doi: 10.1109/TPEL.2024.3410878.

[141] B. Whitaker *et al.*, "A High-Density, High-Efficiency, Isolated On-Board Vehicle Battery Charger Utilizing Silicon Carbide Power Devices," *IEEE Trans. Power Electron.*, vol. 29, no. 5, pp. 2606–2617, May 2014, doi: 10.1109/TPEL.2013.2279950.

[142] Z. Zhang, C. Liu, M. Wang, Y. Si, Y. Liu, and Q. Lei, "High-Efficiency High-Power-Density CLLC Resonant Converter With Low-Stray-Capacitance and Well-Heat-Dissipated Planar Transformer for EV On-Board Charger," *IEEE Trans. Power Electron.*, vol. 35, no. 10, pp. 10831–10851, Oct. 2020, doi: 10.1109/TPEL.2020.2980313.

[143] L. Zhu, A. R. Taylor, G. Liu, and K. Bai, "A Multiple-Phase-Shift Control for a SiC-Based EV Charger to Optimize the Light-Load Efficiency, Current Stress, and Power Quality," *IEEE J. Emerg. Sel. Top. Power Electron.*, vol. 6, no. 4, pp. 2262–2272, Dec. 2018, doi: 10.1109/JESTPE.2018.2820064.

[144] P. M. Johnson and K. H. Bai, "A dual-DSP controlled SiC MOSFET based 96%-efficiency 20kW EV on-board battery charger using LLC resonance technology," in *2017 IEEE Symposium Series on Computational Intelligence (SSCI)*, Nov. 2017, pp. 1–5. doi: 10.1109/SSCI.2017.8285262.

[145] B. Li, Q. Li, and F. C. Lee, "A WBG based three phase 12.5 kW 500 kHz CLLC resonant converter with integrated PCB winding transformer," in *2018 IEEE Applied Power Electronics Conference and Exposition (APEC)*, Mar. 2018, pp. 469–475. doi: 10.1109/APEC.2018.8341053.

[146] E. Gurpinar and A. Castellazzi, "Single-Phase T-Type Inverter Performance Benchmark Using Si IGBTs, SiC MOSFETs, and GaN HEMTs," *IEEE Trans. Power Electron.*, vol. 31, no. 10, pp. 7148–7160, Oct. 2016, doi: 10.1109/TPEL.2015.2506400.

[147] Z. Liu, B. Li, F. C. Lee, and Q. Li, "High-Efficiency High-Density Critical Mode Rectifier/Inverter for WBG-Device-Based On-Board Charger," *IEEE Trans. Ind. Electron.*, vol. 64, no. 11, pp. 9114–9123, Nov. 2017, doi: 10.1109/TIE.2017.2716873.

[148] K. Olejniczak *et al.*, "A compact 110 kVA, 140°C ambient, 105°C liquid cooled, all-SiC inverter for electric vehicle traction drives," in *2017 IEEE Applied Power Electronics Conference and Exposition (APEC)*, Mar. 2017, pp. 735–742. doi: 10.1109/APEC.2017.7930776.

[149] J. Zhu, H. Kim, H. Chen, R. Erickson, and D. Maksimović, "High efficiency SiC traction inverter for electric vehicle applications," in *2018 IEEE Applied Power Electronics Conference and Exposition (APEC)*, Mar. 2018, pp. 1428–1433. doi: 10.1109/APEC.2018.8341204.

[150] V. P. Galigekere *et al.*, "Design and Implementation of an Optimized 100 kW Stationary Wireless Charging System for EV Battery Recharging," in *2018 IEEE Energy Conversion Congress and Exposition (ECCE)*, Sep. 2018, pp. 3587–3592. doi: 10.1109/ECCE.2018.8557590.

[151] M. Zou *et al.*, "Systematic Efficiency-Density Co-Optimization of 100 kW GaN Traction Inverter: Methodology and Integration," *IEEE Trans. Power Electron.*, pp. 1–18, 2025, doi: 10.1109/TPEL.2025.3584763.

[152] B. Li, Q. Li, and F. C. Lee, "A novel PCB winding transformer with controllable leakage integration for a 6.6kW 500kHz high efficiency high density bi-directional on-board charger," in *2017 IEEE Applied Power Electronics Conference and Exposition (APEC)*, Mar. 2017, pp. 2917–2924. doi: 10.1109/APEC.2017.7931111.

[153] P. He, A. Mallik, A. Sankar, and A. Khaligh, "Design of a 1-MHz High-Efficiency High-Power-Density Bidirectional GaN-Based CLLC Converter for Electric Vehicles," *IEEE Trans. Veh. Technol.*, vol. 68, no. 1, pp. 213–223, Jan. 2019, doi: 10.1109/TVT.2018.2881276.

[154] S. Bolte, C. Henkenius, J. Böcker, A. Zibart, E. Kenig, and H. Figge, "Water-cooled on-board charger with optimized cooling channel," in *2017 19th European Conference on Power Electronics and Applications (EPE'17 ECCE Europe)*, Sep. 2017, p. P.1-P.9. doi: 10.23919/EPE17ECCEEurope.2017.8099019.

[155] D. Han, J. Noppakunkajorn, and B. Sarlioglu, "Comprehensive Efficiency, Weight, and Volume Comparison of SiC- and Si-Based Bidirectional DC–DC Converters for Hybrid Electric Vehicles," *IEEE Trans. Veh. Technol.*, vol. 63, no. 7, pp. 3001–3010, Sep. 2014, doi: 10.1109/TVT.2014.2323193.

[156] W. V. Wang, D. J. Thrimawithana, and M. Neuburger, "An Si MOSFET-Based High-Power Wireless EV Charger With a Wide ZVS Operating Range," *IEEE Trans. Power Electron.*, vol. 36, no. 10, pp. 11163–11173, Oct. 2021, doi: 10.1109/TPEL.2021.3071516.

[157] J. Lu *et al.*, "A Modular-Designed Three-Phase High-Efficiency High-Power-Density EV Battery Charger Using Dual/Triple-Phase-Shift Control," *IEEE Trans. Power Electron.*, vol. 33, no. 9, pp. 8091–8100, Sep. 2018, doi: 10.1109/TPEL.2017.2769661.

[158] S. Li, S. Lu, and C. C. Mi, "Revolution of Electric Vehicle Charging Technologies Accelerated by Wide Bandgap Devices," *Proc. IEEE*, vol. 109, no. 6, pp. 985–1003, Jun. 2021, doi: 10.1109/JPROC.2021.3071977.

[159] F. Jin, A. Nabih, T. Yuan, and Q. Li, "A High-Efficiency High-Density Three-Phase CLLC Resonant Converter With a Universally Derived Three-Phase Integrated Transformer for On-Board-Charger Application," *IEEE Trans. Power Electron.*, vol. 39, no. 4, pp. 4350–4366, Apr. 2024, doi: 10.1109/TPEL.2024.3354679.

[160] T. Yuan, F. Jin, Z. Li, C. Zhao, and Q. Li, "Design of an Integrated Transformer With Parallel Windings for a 30-kW LLC Resonant Converter," *IEEE Trans. Power Electron.*, vol. 38, no. 11, pp. 14317–14333, Nov. 2023, doi: 10.1109/TPEL.2023.3291954.

[161] Y. Cao, M. Ngo, N. Yan, D. Dong, R. Burgos, and A. Ismail, "Design and Implementation of an 18-kW 500-kHz 98.8% Efficiency High-Density Battery Charger With Partial Power Processing," *IEEE J. Emerg. Sel. Top. Power Electron.*, vol. 10, no. 6, pp. 7963–7975, Dec. 2022, doi: 10.1109/JESTPE.2021.3108717.

[162] M. Shojaie, N. Elsayad, H. Moradisizkoohi, and O. A. Mohammed, "Design and Experimental Verification of a High-Voltage Series-Stacked GaN eHEMT Module for Electric Vehicle Applications," *IEEE Trans. Transp. Electrification*, vol. 5, no. 1, pp. 31–47, Mar. 2019, doi: 10.1109/TTE.2018.2888476.

[163] S. Suyal, S. Dutta, and A. K. Yadav, "Loss Comparison of GaN, SiC, and IGBT Based Inverters for Low Voltage High Current Two-Wheeler EV Applications," in *2024 IEEE International Conference on Power Electronics, Drives and Energy Systems (PEDES)*, Dec. 2024, pp. 1–6. doi: 10.1109/PEDES61459.2024.10961671.

[164] H. Wei, B. Lou, Z. Zhang, B. Liang, F.-Y. Wang, and C. Lv, "Autonomous Navigation for eVTOL: Review and Future Perspectives," *IEEE Trans. Intell. Veh.*, vol. 9, no. 2, pp. 4145–4171, Feb. 2024, doi: 10.1109/TIV.2024.3352613.

[165] N. Swaminathan, S. R. P. Reddy, K. RajaShekara, and K. S. Haran, "Flying Cars and eVTOLs—Technology Advancements, Powertrain Architectures, and Design," *IEEE Trans. Transp. Electrification*, vol. 8, no. 4, pp. 4105–4117, Dec. 2022, doi: 10.1109/TTE.2022.3172960.

[166] D. Menzi, L. Imperiali, E. Bürgisser, M. Ulmer, J. Huber, and J. W. Kolar, "Ultralightweight High-Efficiency Buck-Boost DC-DC Converters for Future eVTOL Aircraft With Hybrid Power Supply," *IEEE Trans. Transp. Electrification*, vol. 10, no. 4, pp. 10297–10313, Dec. 2024, doi: 10.1109/TTE.2024.3375026.

[167] R. Chen and F. F. Wang, "SiC and GaN Devices With Cryogenic Cooling," *IEEE Open J. Power Electron.*, vol. 2, pp. 315–326, 2021, doi: 10.1109/OJPEL.2021.3075061.

[168] F. F. Wang, R. Chen, and K. Rajashekara, "Wide Bandgap Semiconductor-Based Power Electronics for Aviation," *IEEE Power Electron. Mag.*, vol. 9, no. 3, pp. 26–36, Sep. 2022, doi: 10.1109/MPEL.2022.3194225.

[169] N. Keshmiri, D. Wang, B. Agrawal, R. Hou, and A. Emadi, "Current Status and Future Trends of GaN HEMTs in Electrified Transportation," *IEEE Access*, vol. 8, pp. 70553–70571, 2020, doi: 10.1109/ACCESS.2020.2986972.

[170] H. Ishino, T. Watanabe, K. Sugiura, and K. Tsuruta, "6-in-1 Silicon carbide power module for high performance of power electronics systems," in *2014 IEEE 26th International Symposium on Power*

This work is licensed under a Creative Commons Attribution 4.0 License. For more information, see https://creativecommons.org/licenses/by/4.0/

This article has been accepted for publication in IEEE Transactions on Power Electronics. This is the author's version which has not been fully edited and content may change prior to final publication. Citation information: DOI 10.1109/TPEL.2026.3675006

Semiconductor Devices & IC's (ISPSD), Jun. 2014, pp. 446–449. doi: 10.1109/ISPSD.2014.6856072.

[171] N. Pallo, T. Modeer, and R. C. N. Pilawa-Podgurski, "Electrically thin approach to switching cell design for flying capacitor multilevel converters," in *2017 IEEE 5th Workshop on Wide Bandgap Power Devices and Applications (WiPDA)*, Oct. 2017, pp. 411–416. doi: 10.1109/WiPDA.2017.8170582.

[172] M. ul Hassan, A. I. Emon, F. Luo, and V. Solovyov, "Design and Validation of a 20-kVA, Fully Cryogenic, Two-Level GaN-Based Current Source Inverter for Full Electric Aircrafts," *IEEE Trans. Transp. Electrification*, vol. 8, no. 4, pp. 4743–4759, Dec. 2022, doi: 10.1109/TTE.2022.3176842.

[173] X. Liu *et al.*, "FPGA-Based Forced Air-Cooled SiC High-Power-Density Inverter for Electrical Aircraft Applications," in *2023 IEEE Applied Power Electronics Conference and Exposition (APEC)*, Mar. 2023, pp. 3169–3173. doi: 10.1109/APEC43580.2023.10131187.

[174] J. Wang, "Wide Bandgap-Based Power Electronics for Aerospace Applications," *IEEE Power Electron. Mag.*, vol. 9, no. 3, pp. 16–25, Sep. 2022, doi: 10.1109/MPEL.2022.3197346.

[175] N. Keshmiri, M. I. Hassan, R. Rodriguez, and A. Emadi, "Comparison of Isolated Bidirectional DC/DC Converters Using WBG Devices for More Electric Aircraft," *IEEE Open J. Ind. Electron. Soc.*, vol. 2, pp. 184–198, 2021, doi: 10.1109/OJIES.2021.3058196.

[176] G.-J. Su, "Comparison of Si, SiC, and GaN based Isolation Converters for Onboard Charger Applications," in *2018 IEEE Energy Conversion Congress and Exposition (ECCE)*, Sep. 2018, pp. 1233–1239. doi: 10.1109/ECCE.2018.8558063.

[177] Y. He and D. J. Perreault, "Diode Evaluation and Series Diode Balancing for High-Voltage High-Frequency Power Converters," *IEEE Trans. Power Electron.*, vol. 35, no. 6, pp. 6301–6314, Jun. 2020, doi: 10.1109/TPEL.2019.2947578.

[178] Y. Cao, K. Ngo, and D. Dong, "A Scalable Electronic-Embedded Transformer, a New Concept Toward Ultra-High-Frequency High-Power Transformer in DC–DC Converters," *IEEE Trans. Power Electron.*, vol. 38, no. 8, pp. 9278–9293, Aug. 2023, doi: 10.1109/TPEL.2023.3279259.

[179] D. K. Mishra *et al.*, "A review on solid-state transformer: A breakthrough technology for future smart distribution grids," *Int. J. Electr. Power Energy Syst.*, vol. 133, p. 107255, Dec. 2021, doi: 10.1016/j.ijepes.2021.107255.

[180] R. Rodrigues, Y. Du, A. Antoniazzi, and P. Cairoli, "A Review of Solid-State Circuit Breakers," *IEEE Trans. Power Electron.*, vol. 36, no. 1, pp. 364–377, Jan. 2021, doi: 10.1109/TPEL.2020.3003358.

[181] Y. Wang, W. Li, X. Wu, and X. Wu, "A Novel Bidirectional Solid-State Circuit Breaker for DC Microgrid," *IEEE Trans. Ind. Electron.*, vol. 66, no. 7, pp. 5707–5714, Jul. 2019, doi: 10.1109/TIE.2018.2878191.

[182] W. Li, Y. Wang, X. Wu, and X. Zhang, "A Novel Solid-State Circuit Breaker for On-Board DC Microgrid System," *IEEE Trans. Ind. Electron.*, vol. 66, no. 7, pp. 5715–5723, Jul. 2019, doi: 10.1109/TIE.2018.2854559.

[183] C. Meyer and R. W. De Doncker, "Solid-state circuit breaker based on active thyristor topologies," *IEEE Trans. Power Electron.*, vol. 21, no. 2, pp. 450–458, Mar. 2006, doi: 10.1109/TPEL.2005.869756.

[184] X. Yang, J. Liu, B. Wang, and G. Zhang, "Pulsed Overcurrent Capability of Power Semiconductor Devices in Solid-State Circuit Breakers: SiC MOSFET vs. Si IGBT," in *2022 IEEE Applied Power Electronics Conference and Exposition (APEC)*, Mar. 2022, pp. 966–973. doi: 10.1109/APEC43599.2022.9773378.

[185] G. E. Mejia-Ruiz, M. R. A. Paternina, A. Zamora-Mendez, J. C. Rosas-Caro, and G. Bolivar-Ortiz, "A Novel GaN-Based Solid-State Circuit Breaker With Voltage Overshoot Suppression," *IEEE Trans. Ind. Electron.*, vol. 69, no. 9, pp. 8949–8960, Sep. 2022, doi: 10.1109/TIE.2021.3116557.

[186] Y. Zhou, R. Na, Y. Feng, and Z. J. Shen, "GaN-Based Tri-Mode Intelligent Solid-State Circuit Breakers for Low-Voltage DC Power Networks," *IEEE Trans. Power Electron.*, vol. 36, no. 6, pp. 6596–6607, Jun. 2021, doi: 10.1109/TPEL.2020.3037541.

[187] F. Liu, W. Liu, X. Zha, H. Yang, and K. Feng, "Solid-State Circuit Breaker Snubber Design for Transient Overvoltage Suppression at Bus Fault Interruption in Low-Voltage DC Microgrid," *IEEE Trans. Power Electron.*, vol. 32, no. 4, pp. 3007–3021, Apr. 2017, doi: 10.1109/TPEL.2016.2574751.

[188] X. Yan *et al.*, "Snubber Branch Design and Development of Solid-State DC Circuit Breaker," *IEEE Trans. Power Electron.*, vol. 38, no. 10, pp. 13042–13051, Oct. 2023, doi: 10.1109/TPEL.2023.3281588.

[189] T. Satoh, K. Osawa, and A. Nitta, "GaN HEMT for Space Applications," in *2018 IEEE BiCMOS and Compound Semiconductor Integrated Circuits and Technology Symposium (BCICTS)*, Oct. 2018, pp. 136–139. doi: 10.1109/BCICTS.2018.8551070.

[190] A. C. Vilas Bôas *et al.*, "Ionizing radiation hardness tests of GaN HEMTs for harsh environments," *Microelectron. Reliab.*, vol. 116, p. 114000, Jan. 2021, doi: 10.1016/j.microrel.2020.114000.

[191] F. Zhou *et al.*, "Irradiation Hardened p-GaN HEMTs Enabling 558 V Single-Event Hardness at 75.7 MeV·cm2/mg and 95% Conversion Efficiency at 300 W/500 kHz," *IEEE Electron Device Lett.*, vol. 45, no. 6, pp. 976–979, Jun. 2024, doi: 10.1109/LED.2024.3386799.

[192] R. Ravindran and A. M. Massoud, "State-of-the-Art DC-DC Converters for Satellite Applications: A Comprehensive Review," *Aerospace*, vol. 12, no. 2, Art. no. 2, Feb. 2025, doi: 10.3390/aerospace12020097.

[193] P. R. K. Chetty, "Electrical power system for low-earth-orbit spacecraft applications," *J. Propuls. Power*, May 2012, doi: 10.2514/3.23224.

[194] K. Kumar, S. Banerjee, and R. R. Kumar, "Efficiency Analysis of a 7.4 kW Dynamic Wireless Charging System for Electric Vehicle Through GaN Devices," in *2020 IEEE International Conference on Power Electronics, Drives and Energy Systems (PEDES)*, Dec. 2020, pp. 1–6. doi: 10.1109/PEDES49360.2020.9379565.

[195] J. Chevinly *et al.*, "Gallium Nitride (GaN) based High-Power Multilevel H-Bridge Inverter for Wireless Power Transfer of Electric Vehicles," in *2024 IEEE Transportation Electrification Conference and Expo (ITEC)*, Jun. 2024, pp. 1–5. doi: 10.1109/ITEC60657.2024.10598884.

[196] J. Choi, D. Tsukiyama, Y. Tsuruda, and J. Rivas, "13.56 MHz 1.3 kW resonant converter with GaN FET for wireless power transfer," in *2015 IEEE Wireless Power Transfer Conference (WPTC)*, May 2015, pp. 1–4. doi: 10.1109/WPT.2015.7140167.

[197] R. Qin, J. Li, and D. Costinett, "A 6.6-kW High-Frequency Wireless Power Transfer System for Electric Vehicle Charging Using Multilayer Nonuniform Self-Resonant Coil at MHz," *IEEE Trans. Power Electron.*, vol. 37, no. 4, pp. 4842–4856, Apr. 2022, doi: 10.1109/TPEL.2021.3120734.

[198] T. Morita *et al.*, "650 V 3.1 mΩcm2 GaN-based monolithic bidirectional switch using normally-off gate injection transistor," in *2007 IEEE International Electron Devices Meeting*, Dec. 2007, pp. 865–868. doi: 10.1109/IEDM.2007.4419086.

[199] M. Imam, "Efficacy of GaN-on-Si Technology for Realizing Commercially Viable Monolithic Bi-Directional Switches," in *IEEE Applied Power Electronics Conference and Exposition (APEC), Industry Session, 2022*.

[200] "Infineon announces CoolGaN^{TM} bidirectional switch and Co | Infineon Technologies." Accessed: Jul. 27, 2025. [Online]. Available: https://www.infineon.com/market-news/2024/infpss202406-111

[201] "NV6428_70mO Max_Bi-Directional GaNFast_TOLT.pdf." Accessed: Jul. 27, 2025. [Online]. Available: https://navitassemi.com/wp-content/plugins/gb-navitas-stock-checker/product_files/NV6428_70mO%20Max_Bi-Directional%20GaNFast_TOLT.pdf

[202] Y. Guo *et al.*, "Enhancement-Mode GaN Monolithic Bidirectional Switch With Breakdown Voltage Over 3.3 kV," *IEEE Electron Device Lett.*, vol. 46, no. 4, pp. 556–559, Apr. 2025, doi: 10.1109/LED.2025.3539175.

[203] Q. Song, H. Cui, Q. Li, and Y. Zhang, "Impact of Substrate Bias on the Stability of Bidirectional GaN HEMT in Hard-and Soft-Switching," in *2025 IEEE Applied Power Electronics Conference and Exposition (APEC)*, Mar. 2025, pp. 202–206. doi: 10.1109/APEC48143.2025.10977559.

[204] J. Liu, "Superior Performance of Infineon's High Voltage CoolGaNTM Bidirectional AC Switch," in *IEEE Applied Power Electronics Conference and Exposition (APEC), Industry Session, 2025*.

[205] M. Imam, H. Kim, K. K. Leong, B. Pandya, and G. Prechtl, "Semiconductor device having a bidirectional switch and discharge circuit," EP3562040A1, Oct. 30, 2019 Accessed: Jul. 27, 2025. [Online]. Available: https://patents.google.com/patent/EP3562040A1/en

This work is licensed under a Creative Commons Attribution 4.0 License. For more information, see https://creativecommons.org/licenses/by/4.0/

This article has been accepted for publication in IEEE Transactions on Power Electronics. This is the author's version which has not been fully edited and content may change prior to final publication. Citation information: DOI 10.1109/TPEL.2026.3675006

[206] M. Imam, "Next Wave of Simple Power Design with 'Truly Monolithic' CoolGaNTM Bi-Directional Switches," in *IEEE Energy Conversion Conference and Expo (ECCE), 2023*,

[207] M. Harrison, "Monolithically Integrated GaN HEMT Bi-Directional Switch (BDS)," in *PCIM Conference 2025; International Exhibition and Conference for Power Electronics, Intelligent Motion, Renewable Energy and Energy Management*, May 2025, pp. 2–11. doi: 10.30420/566541418.

[208] V. Veliadis and T. M. Jahns, "Monolithic Bidirectional Lateral GaN Switches Reinvigorate Power Electronics Applications," *IEEE Power Electron. Mag.*, vol. 12, no. 1, pp. 22–28, Mar. 2025, doi: 10.1109/MPEL.2025.3528696.

[209] F. Vollmaier, N. Nain, J. Huber, J. W. Kolar, K. K. Leong, and B. Pandya, "Performance Evaluation of Future T-Type PFC Rectifier and Inverter Systems with Monolithic Bidirectional 600 V GaN Switches," in *2021 IEEE Energy Conversion Congress and Exposition (ECCE)*, Oct. 2021, pp. 5297–5304. doi: 10.1109/ECCE47101.2021.9595422.

[210] Q. Yu, D. Klikic, V. Aulagnier, E. Persson, and J. Cerce, "Evaluation of Monolithic AC GaN Switch in A Vienna Rectifier for UPS," in *2024 IEEE Applied Power Electronics Conference and Exposition (APEC)*, Feb. 2024, pp. 767–773. doi: 10.1109/APEC48139.2024.10509374.

[211] E. Charbon *et al.*, "Cryo-CMOS for quantum computing," in *2016 IEEE International Electron Devices Meeting (IEDM)*, Dec. 2016, p. 13.5.1-13.5.4. doi: 10.1109/IEDM.2016.7838410.

[212] B. Patra *et al.*, "Cryo-CMOS Circuits and Systems for Quantum Computing Applications," *IEEE J. Solid-State Circuits*, vol. 53, no. 1, pp. 309–321, Jan. 2018, doi: 10.1109/JSSC.2017.2737549.

[213] F. Sebastiano *et al.*, "Cryo-CMOS Electronic Control for Scalable Quantum Computing: Invited," in *Proceedings of the 54th Annual Design Automation Conference 2017*, in DAC '17. New York, NY, USA: Association for Computing Machinery, Jun. 2017, pp. 1–6. doi: 10.1145/3061639.3072948.

[214] L. Nela, N. Perera, C. Erine, and E. Matioli, "Performance of GaN Power Devices for Cryogenic Applications Down to 4.2 K," *IEEE Trans. Power Electron.*, vol. 36, no. 7, pp. 7412–7416, Jul. 2021, doi: 10.1109/TPEL.2020.3047466.

[215] Z. Jiang *et al.*, "Roles of Hole Trap on Gate Leakage of p-GaN HEMTs at Cryogenic Temperatures," *IEEE Electron Device Lett.*, vol. 44, no. 10, pp. 1612–1615, Oct. 2023, doi: 10.1109/LED.2023.3311395.

[216] Y. H. Ng *et al.*, "p-GaN gate power HEMT heterostructure as a versatile platform for extremely wide-temperature-range (X-WTR) applications," *Appl. Phys. Lett.*, vol. 124, no. 4, p. 043504, Jan. 2024, doi: 10.1063/5.0184784.

[217] H. Gui *et al.*, "Review of Power Electronics Components at Cryogenic Temperatures," *IEEE Trans. Power Electron.*, vol. 35, no. 5, pp. 5144–5156, May 2020, doi: 10.1109/TPEL.2019.2944781.

[218] X. Yang *et al.*, "First Characterization of Si, SiC and GaN Power Deivces at Deep Cryogenic Temperatures Down to 0.1 K," in *2024 IEEE International Electron Devices Meeting (IEDM)*, Dec. 2024, pp. 1–4. doi: 10.1109/IEDM50854.2024.10873437.

[219] X. Yang *et al.*, "First Characterization of GaN Power Device and IC at Deep Cryogenic Temperatures down to 100 mK," in *2025 IEEE Applied Power Electronics Conference and Exposition (APEC)*, Mar. 2025, pp. 1020–1025. doi: 10.1109/APEC48143.2025.10977293.

[220] M. N. Gurusinghe, S. K. Davidsson, and T. G. Andersson, "Two-dimensional electron mobility limitation mechanisms in ${\mathrm{Al}}_{x}{\mathrm{Ga}}_{1\ensuremath{-}x}\mathrm{N}/\mathrm{GaN}$ heterostructures," *Phys. Rev. B*, vol. 72, no. 4, p. 045316, Jul. 2005, doi: 10.1103/PhysRevB.72.045316.

[221] D. Zanato, S. Gokden, N. Balkan, B. K. Ridley, and W. J. Schaff, "The effect of interface-roughness and dislocation scattering on low temperature mobility of 2D electron gas in GaN/AlGaN," *Semicond. Sci. Technol.*, vol. 19, no. 3, p. 427, Jan. 2004, doi: 10.1088/0268-1242/19/3/024.

[222] X. Yang, Z. Yang, M. Porter, L. Shao, and Y. Zhang, "First Characterization of Si IGBT, SiC MOSFET, and GaN HEMT at Deep Cryogenic Temperatures down to 10 Millikelvins," *IEEE Trans. Power Electron.*, pp. 1–13, 2025, doi: 10.1109/TPEL.2025.3601008.

[223] C. Buttay *et al.*, "State of the art of high temperature power electronics," *Mater. Sci. Eng. B*, vol. 176, no. 4, pp. 283–288, Mar. 2011, doi: 10.1016/j.mseb.2010.10.003.

[224] M. Cabello, V. Soler, G. Rius, J. Montserrat, J. Rebollo, and P. Godignon, "Advanced processing for mobility improvement in 4H-SiC MOSFETs: A review," *Mater. Sci. Semicond. Process.*, vol. 78, pp. 22–31, May 2018, doi: 10.1016/j.mssp.2017.10.030.

[225] K. Matocha, "Challenges in SiC power MOSFET design," *Solid-State Electron.*, vol. 52, no. 10, pp. 1631–1635, Oct. 2008, doi: 10.1016/j.sse.2008.06.034.

[226] P. G. Neudeck *et al.*, "Extreme temperature 6H-SiC JFET integrated circuit technology," *Phys. Status Solidi A*, vol. 206, no. 10, pp. 2329–2345, 2009, doi: 10.1002/pssa.200925188.

[227] N. Chowdhury, J. Jung, Q. Xie, M. Yuan, K. Cheng, and T. Palacios, "Performance Estimation of GaN CMOS Technology," in *2021 Device Research Conference (DRC)*, Jun. 2021, pp. 1–2. doi: 10.1109/DRC52342.2021.9467201.

[228] A. Ottaviani *et al.*, "Evaluation of High-Temperature High-Frequency GaN-Based LC-Oscillator Components," *IEEE Trans. Electron Devices*, vol. 67, no. 11, pp. 4587–4591, Nov. 2020, doi: 10.1109/TED.2020.3016918.

[229] J. Wei *et al.*, "GaN Power Integration Technology and Its Future Prospects," *IEEE Trans. Electron Devices*, vol. 71, no. 3, pp. 1365–1382, Mar. 2024, doi: 10.1109/TED.2023.3341053.

[230] C. Fleury *et al.*, "High temperature performances of normally-off p-GaN gate AlGaN/GaN HEMTs on SiC and Si substrates for power applications," *Microelectron. Reliab.*, vol. 55, no. 9, pp. 1687–1691, Aug. 2015, doi: 10.1016/j.microrel.2015.06.010.

[231] H. Lee, H. Ryu, J. Kang, and W. Zhu, "Stable High Temperature Operation of p-GaN Gate HEMT With Etch-Stop Layer," *IEEE Electron Device Lett.*, vol. 45, no. 3, pp. 312–315, Mar. 2024, doi: 10.1109/LED.2024.3352046.

[232] M. Yuan *et al.*, "High Temperature Robustness of Enhancement-Mode p-GaN-Gated AlGaN/GaN HEMT Technology," in *2022 IEEE 9th Workshop on Wide Bandgap Power Devices & Applications (WiPDA)*, Nov. 2022, pp. 40–44. doi: 10.1109/WiPDA56483.2022.9955304.

[233] D. Maier *et al.*, "InAlN/GaN HEMTs for Operation in the 1000 ^\circ \hboxC Regime: A First Experiment," *IEEE Electron Device Lett.*, vol. 33, no. 7, pp. 985–987, Jul. 2012, doi: 10.1109/LED.2012.2196972.

[234] F. Medjdoub *et al.*, "Can InAlN/GaN be an alternative to high power / high temperature AlGaN/GaN devices?," in *2006 International Electron Devices Meeting*, Dec. 2006, pp. 1–4. doi: 10.1109/IEDM.2006.346935.

[235] M. Yuan *et al.*, "Enhancement-Mode GaN Transistor Technology for Harsh Environment Operation," *IEEE Electron Device Lett.*, vol. 44, no. 7, pp. 1068–1071, Jul. 2023, doi: 10.1109/LED.2023.3279813.

[236] M. Yuan, Q. Xie, J. Niroula, N. Chowdhury, and T. Palacios, "GaN Memory Operational at 300 °C," *IEEE Electron Device Lett.*, vol. 43, no. 12, pp. 2053–2056, Dec. 2022, doi: 10.1109/LED.2022.3218671.

[237] M. Yuan *et al.*, "GaN Ring Oscillators Operational at 500 °C Based on a GaN-on-Si Platform," *IEEE Electron Device Lett.*, vol. 43, no. 11, pp. 1842–1845, Nov. 2022, doi: 10.1109/LED.2022.3204566.

[238] D. Reusch and J. Strydom, "Understanding the Effect of PCB Layout on Circuit Performance in a High-Frequency Gallium-Nitride-Based Point of Load Converter," *IEEE Trans. Power Electron.*, vol. 29, no. 4, pp. 2008–2015, Apr. 2014, doi: 10.1109/TPEL.2013.2266103.

[239] F. Yang *et al.*, "Objective-Based Low-Frequency Parasitic Inductance Characterization Method for Power Semiconductor Package With High Power and Switching Speed," *IEEE Trans. Power Electron.*, vol. 38, no. 6, pp. 6886–6890, Jun. 2023, doi: 10.1109/TPEL.2023.3247890.

[240] H. Cui *et al.*, "A Single-Event Parasitic Inductance Characterization Method Based on Parallel Resonance Principle for Power Modules," in *2023 11th International Conference on Power Electronics and ECCE Asia (ICPE 2023 - ECCE Asia)*, May 2023, pp. 2072–2077. doi: 10.23919/ICPE2023-ECCEAsia54778.2023.10213848.

[241] K. Wang, X. Yang, L. Wang, and P. Jain, "Instability Analysis and Oscillation Suppression of Enhancement-Mode GaN Devices in Half-Bridge Circuits," *IEEE Trans. Power Electron.*, vol. 33, no. 2, pp. 1585–1596, Feb. 2018, doi: 10.1109/TPEL.2017.2684094.

[242] B. Sun, K. L. Jørgensen, Z. Zhang, and M. A. E. Andersen, "Research of Power Loop Layout and Parasitic Inductance in GaN Transistor Implementation," *IEEE Trans. Ind. Appl.*, vol. 57, no. 2, pp. 1677–1687, Mar. 2021, doi: 10.1109/TIA.2020.3048641.

[243] R. Zhang, J. P. Kozak, M. Xiao, J. Liu, and Y. Zhang, "Surge-Energy and Overvoltage Ruggedness of P-Gate GaN HEMTs," *IEEE Trans.*

This work is licensed under a Creative Commons Attribution 4.0 License. For more information, see https://creativecommons.org/licenses/by/4.0/

This article has been accepted for publication in IEEE Transactions on Power Electronics. This is the author's version which has not been fully edited and content may change prior to final publication. Citation information: DOI 10.1109/TPEL.2026.3675006

Power Electron., vol. 35, no. 12, pp. 13409–13419, Dec. 2020, doi: 10.1109/TPEL.2020.2993982.

[244] H. Cui *et al.*, "Understanding the Thermal Characteristics of SiC Power MOSFET Device for Power Modules Design," in *2023 IEEE 14th International Symposium on Power Electronics for Distributed Generation Systems (PEDG)*, Jun. 2023, pp. 1088–1095. doi: 10.1109/PEDG56097.2023.10215269.

[245] H. Cui *et al.*, "A Jet Impingement Cooling Method to Mitigate the Inherent Uneven Temperature of Multi-chips in Power Modules," in *2024 IEEE Applied Power Electronics Conference and Exposition (APEC)*, Feb. 2024, pp. 2574–2579. doi: 10.1109/APEC48139.2024.10509511.

[246] A. I. Emon, Mustafeez-ul-Hassan, A. B. Mirza, J. Kaplun, S. S. Vala, and F. Luo, "A Review of High-Speed GaN Power Modules: State of the Art, Challenges, and Solutions," *IEEE J. Emerg. Sel. Top. Power Electron.*, vol. 11, no. 3, pp. 2707–2729, Jun. 2023, doi: 10.1109/JESTPE.2022.3232265.

[247] M. Wang *et al.*, "Advanced Packaging Technology of GaN HEMT Module for High-Power and High-Frequency Applications: A Review," *IEEE Trans. Compon. Packag. Manuf. Technol.*, vol. 14, no. 9, pp. 1537–1550, Sep. 2024, doi: 10.1109/TCPMT.2024.3447079.

[248] W. Zhang *et al.*, "A New Package of High-Voltage Cascode Gallium Nitride Device for Megahertz Operation," *IEEE Trans. Power Electron.*, vol. 31, no. 2, pp. 1344–1353, Feb. 2016, doi: 10.1109/TPEL.2015.2418572.

[249] J. A. Brothers and T. Beechner, "GaN Module Design Recommendations Based on the Analysis of a Commercial 3-Phase GaN Module," in *2019 IEEE Energy Conversion Congress and Exposition (ECCE)*, Sep. 2019, pp. 4109–4116. doi: 10.1109/ECCE.2019.8913223.

[250] C. Laurant *et al.*, "Very low parasitic inductance double side cooling power modules based on ceramic substrates and GaN devices," in *2020 IEEE 70th Electronic Components and Technology Conference (ECTC)*, Jun. 2020, pp. 1402–1407. doi: 10.1109/ECTC32862.2020.00222.

[251] S. Ji, D. Reusch, and F. C. Lee, "High-Frequency High Power Density 3-D Integrated Gallium-Nitride-Based Point of Load Module Design," *IEEE Trans. Power Electron.*, vol. 28, no. 9, pp. 4216–4226, Sep. 2013, doi: 10.1109/TPEL.2012.2235859.

[252] A. B. Jørgensen, S. Bęczkowski, C. Uhrenfeldt, N. H. Petersen, S. Jørgensen, and S. Munk-Nielsen, "A Fast-Switching Integrated Full-Bridge Power Module Based on GaN eHEMT Devices," *IEEE Trans. Power Electron.*, vol. 34, no. 3, pp. 2494–2504, Mar. 2019, doi: 10.1109/TPEL.2018.2845538.

[253] Z. Dong, H. Yan, Y. Fan, X. Wu, and J. Zhang, "A 3-D Integrated Power Module of GaN HEMTs Based on Silver Sintering Processes," *IEEE Trans. Power Electron.*, vol. 39, no. 3, pp. 2932–2937, Mar. 2024, doi: 10.1109/TPEL.2023.3339759.

[254] N. Jia, X. Tian, L. Xue, H. Bai, L. M. Tolbert, and H. Cui, "Integrated Common-Mode Filter for GaN Power Module With Improved High-Frequency EMI Performance," *IEEE Trans. Power Electron.*, vol. 38, no. 6, pp. 6897–6901, Jun. 2023, doi: 10.1109/TPEL.2023.3248092.

[255] H. Kong, L. Jia, L. Wang, Y. Yao, F. Yang, and H. Cui, "A Flexible-PCB on DPC GaN Power Module With Ultralow Parasitic Inductance," *IEEE Trans. Power Electron.*, vol. 40, no. 4, pp. 5241–5251, Apr. 2025, doi: 10.1109/TPEL.2024.3521083.

[256] B. Li, X. Yang, K. Wang, H. Zhu, L. Wang, and W. Chen, "A Compact Double-Sided Cooling 650V/30A GaN Power Module With Low Parasitic Parameters," *IEEE Trans. Power Electron.*, vol. 37, no. 1, pp. 426–439, Jan. 2022, doi: 10.1109/TPEL.2021.3092367.

[257] A. I. Emon *et al.*, "Design and Optimization of Gate Driver Integrated Multichip 3-D GaN Power Module," *IEEE Trans. Transp. Electrification*, vol. 8, no. 4, pp. 4391–4407, Dec. 2022, doi: 10.1109/TTE.2022.3173585.

[258] S. Moench *et al.*, "PCB-Embedded GaN-on-Si Half-Bridge and Driver ICs With On-Package Gate and DC-Link Capacitors," *IEEE Trans. Power Electron.*, vol. 36, no. 1, pp. 83–86, Jan. 2021, doi: 10.1109/TPEL.2020.3005621.

[259] S. Lu *et al.*, "Double-Sided Cooling Half-Bridge Power Module of 650V/150A Gallium Nitride High-Electron-Mobility Transistor," *IEEE Trans. Ind. Electron.*, vol. 71, no. 12, pp. 15578–15586, Dec. 2024, doi: 10.1109/TIE.2024.3383021.

[260] C.-A. Manier *et al.*, "Wafer Level Embedding Technology for Packaging of Planar GaN Half-Bridge Module in High Power Density Conversion Applications," in *PCIM Europe 2018; International Exhibition and Conference for Power Electronics, Intelligent Motion, Renewable Energy and Energy Management*, Jun. 2018, pp. 1–8. Accessed: Aug. 04, 2025. [Online]. Available: https://ieeexplore.ieee.org/document/8402955/

[261] F. Luo, Z. Chen, L. Xue, P. Mattavelli, D. Boroyevich, and B. Hughes, "Design considerations for GaN HEMT multichip halfbridge module for high-frequency power converters," in *2014 IEEE Applied Power Electronics Conference and Exposition - APEC 2014*, Mar. 2014, pp. 537–544. doi: 10.1109/APEC.2014.6803361.

[262] C. Kuring *et al.*, "GaN-Based Multichip Half-Bridge Power Module Integrated on High-Voltage AlN Ceramic Substrate," *IEEE Trans. Power Electron.*, vol. 37, no. 10, pp. 11896–11910, Oct. 2022, doi: 10.1109/TPEL.2022.3172659.

[263] D. Reusch, J. Strydom, and A. Lidow, "Thermal Evaluation of Chip-Scale Packaged Gallium Nitride Transistors," *IEEE J. Emerg. Sel. Top. Power Electron.*, vol. 4, no. 3, pp. 738–746, Sep. 2016, doi: 10.1109/JESTPE.2016.2587479.

[264] J. Roberts, "Maximizing GaN Power Transistor Performance with Embedded Packaging".

[265] M. D. Rahman, T. Akter, A. S. M. K. Hasan, H. A. Mantooth, and X. Song, "Design of Low Parasitic Inductance GaN HEMT Flip-Chip Power Module," in *2025 IEEE Applied Power Electronics Conference and Exposition (APEC)*, Mar. 2025, pp. 1844–1849. doi: 10.1109/APEC48143.2025.10977129.

[266] S. Savulak, B. Guo, and S. Krishnamurthy, "Three-phase inverter employing PCB embedded GaN FETs," in *2018 IEEE Applied Power Electronics Conference and Exposition (APEC)*, Mar. 2018, pp. 1256–1260. doi: 10.1109/APEC.2018.8341177.

[267] Z. Qi, Y. Pei, L. Wang, Q. Yang, and K. Wang, "A Highly Integrated PCB Embedded GaN Full-Bridge Module With Ultralow Parasitic Inductance," *IEEE Trans. Power Electron.*, vol. 37, no. 4, pp. 4161–4173, Apr. 2022, doi: 10.1109/TPEL.2021.3128694.

[268] S. Lu, T. Zhao, Z. Zhang, K. D. T. Ngo, R. Burgos, and G.-Q. Lu, "Low Parasitic-Inductance Packaging of a 650 V/150 A Half-Bridge Module Using Enhancement-Mode Gallium-Nitride High Electron Mobility Transistors," *IEEE Trans. Ind. Electron.*, vol. 70, no. 1, pp. 344–351, Jan. 2023, doi: 10.1109/TIE.2022.3148750.

[269] X. Tian *et al.*, "PCB-on-DBC GaN Power Module Design With High-Density Integration and Double-Sided Cooling," *IEEE Trans. Power Electron.*, vol. 39, no. 1, pp. 507–516, Jan. 2024, doi: 10.1109/TPEL.2023.3311440.

[270] L. Zhu, Y. Yan, and H. Bai, "Design and Transient Analysis of a 650 V/150 A GaN Power Modules With Integrated Bias Power and Gate-Drive Circuit," *IEEE Trans. Compon. Packag. Manuf. Technol.*, vol. 14, no. 3, pp. 417–427, Mar. 2024, doi: 10.1109/TCPMT.2024.3371248.

[271] B. Li, X. Yang, Y. Yao, K. Wang, L. Wang, and W. Chen, "Hybrid Double-Side Cooled Package for Multichip GaN Power Module With Optimal Current Sharing at High Switching Speed," *IEEE J. Emerg. Sel. Top. Power Electron.*, vol. 12, no. 4, pp. 3607–3618, Aug. 2024, doi: 10.1109/JESTPE.2024.3395433.

[272] S. Liu, L. Li, and Y.-H. Mei, "A Double-Sided 650 V GaN Power Device Using Flexible Buffers with Low Parasitic Inductance," in *2023 IEEE 14th International Symposium on Power Electronics for Distributed Generation Systems (PEDG)*, Jun. 2023, pp. 169–173. doi: 10.1109/PEDG56097.2023.10215139.

[273] T. Braun *et al.*, "Fan-out Wafer Level Packaging of GaN Components for RF Applications," in *2020 IEEE 70th Electronic Components and Technology Conference (ECTC)*, Jun. 2020, pp. 7–13. doi: 10.1109/ECTC32862.2020.00014.

[274] H. Ren *et al.*, "Power Delivery for Scaled-Out Chiplet-Based Wafer-Scale Systems with 8\mu\mathrmm Cu-Cu Bond Pitch on Active SI-Interconnect Fabric Substrate," in *2025 Symposium on VLSI Technology and Circuits (VLSI Technology and Circuits)*, Jun. 2025, pp. 1–3. doi: 10.23919/VLSITechnologyandCir65189.2025.11074799.

[275] C. Chen, P. Pan, J. Gu, M. Liu, and X. Li, "Design and Wafer-Level Fabrication of Stacked-Type Transformers for High-Density Power Converters," *IEEE Trans. Power Electron.*, vol. 39, no. 4, pp. 4503–4512, Apr. 2024, doi: 10.1109/TPEL.2024.3355243.

This work is licensed under a Creative Commons Attribution 4.0 License. For more information, see https://creativecommons.org/licenses/by/4.0/

This article has been accepted for publication in IEEE Transactions on Power Electronics. This is the author's version which has not been fully edited and content may change prior to final publication. Citation information: DOI 10.1109/TPEL.2026.3675006

[276] J. Zhou *et al.*, "Recent Advances in Device-Level Thermal Management Technologies for Wide Bandgap Semiconductor: A Review," *IEEE Trans. Electron Devices*, vol. 72, no. 6, pp. 2769–2782, Jun. 2025, doi: 10.1109/TED.2025.3562506.

[277] M. Zou *et al.*, "Systematic Efficiency-Density Co-Optimization of 100 kW GaN Traction Inverter: Methodology and Integration," *IEEE Trans. Power Electron.*, pp. 1–18, 2025, doi: 10.1109/TPEL.2025.3584763.

[278] Z. Zhang *et al.*, "Packaging of a 10-kV Double-Side Cooled Silicon Carbide Diode Module With Thin Substrates Coated by a Nonlinear Resistive Polymer-Nanoparticle Composite," *IEEE Trans. Power Electron.*, vol. 37, no. 12, pp. 14462–14470, Dec. 2022, doi: 10.1109/TPEL.2022.3190303.

[279] Z. Zhang *et al.*, "Insulation Capability at 10 kV, >300 V/ns of a Nonlinear Resistive Polymer Nanocomposite Field-Grading Coating in a 15-kV Silicon Carbide Module," *IEEE Trans. Power Electron.*, vol. 39, no. 12, pp. 15748–15756, Dec. 2024, doi: 10.1109/TPEL.2024.3445328.

[280] B. Zhang and S. Wang, "A Survey of EMI Research in Power Electronics Systems With Wide-Bandgap Semiconductor Devices," *IEEE J. Emerg. Sel. Top. Power Electron.*, vol. 8, no. 1, pp. 626–643, Mar. 2020, doi: 10.1109/JESTPE.2019.2953730.

This work is licensed under a Creative Commons Attribution 4.0 License. For more information, see https://creativecommons.org/licenses/by/4.0/