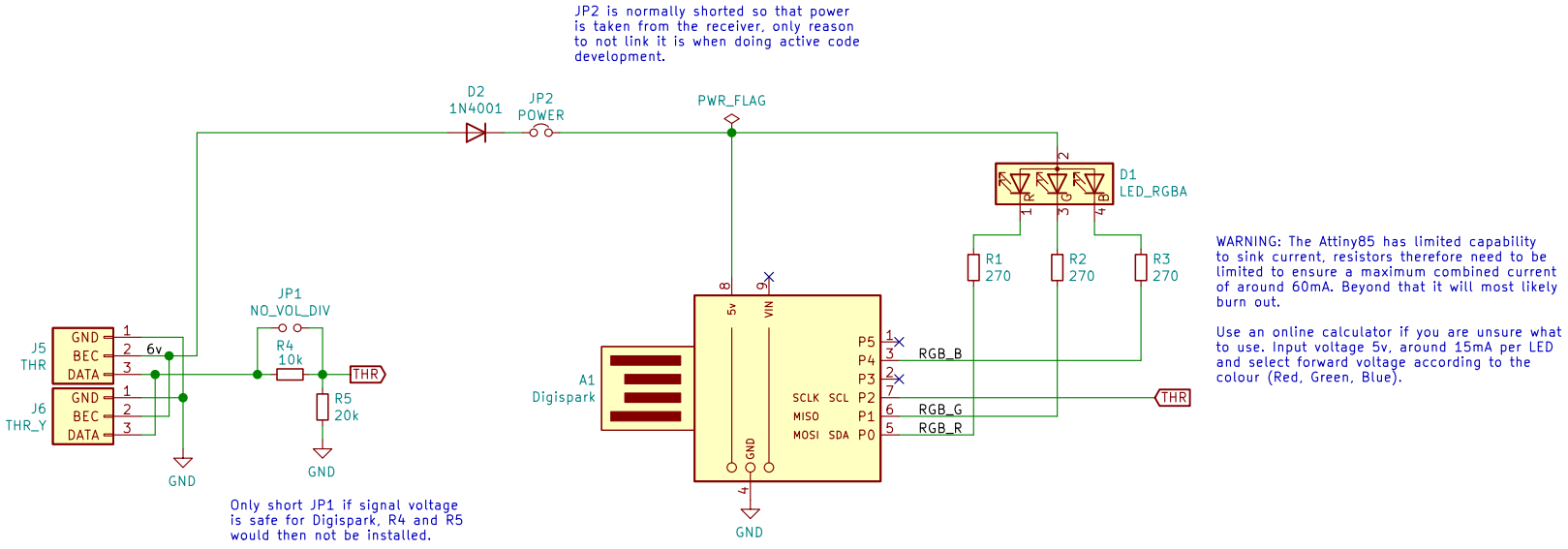

Found some exhaust tubes for a 1:10 model on AliExpress, let's add some glow effects to them using a Digispark.

Sheet: /
File: RC Exhaust Digispark.sch

Title: RC Exhaust Digispark

Size: A4	Date:	Rev:
KiCad E.D.A. kicad (5.1.8)-1		Id: 1/1