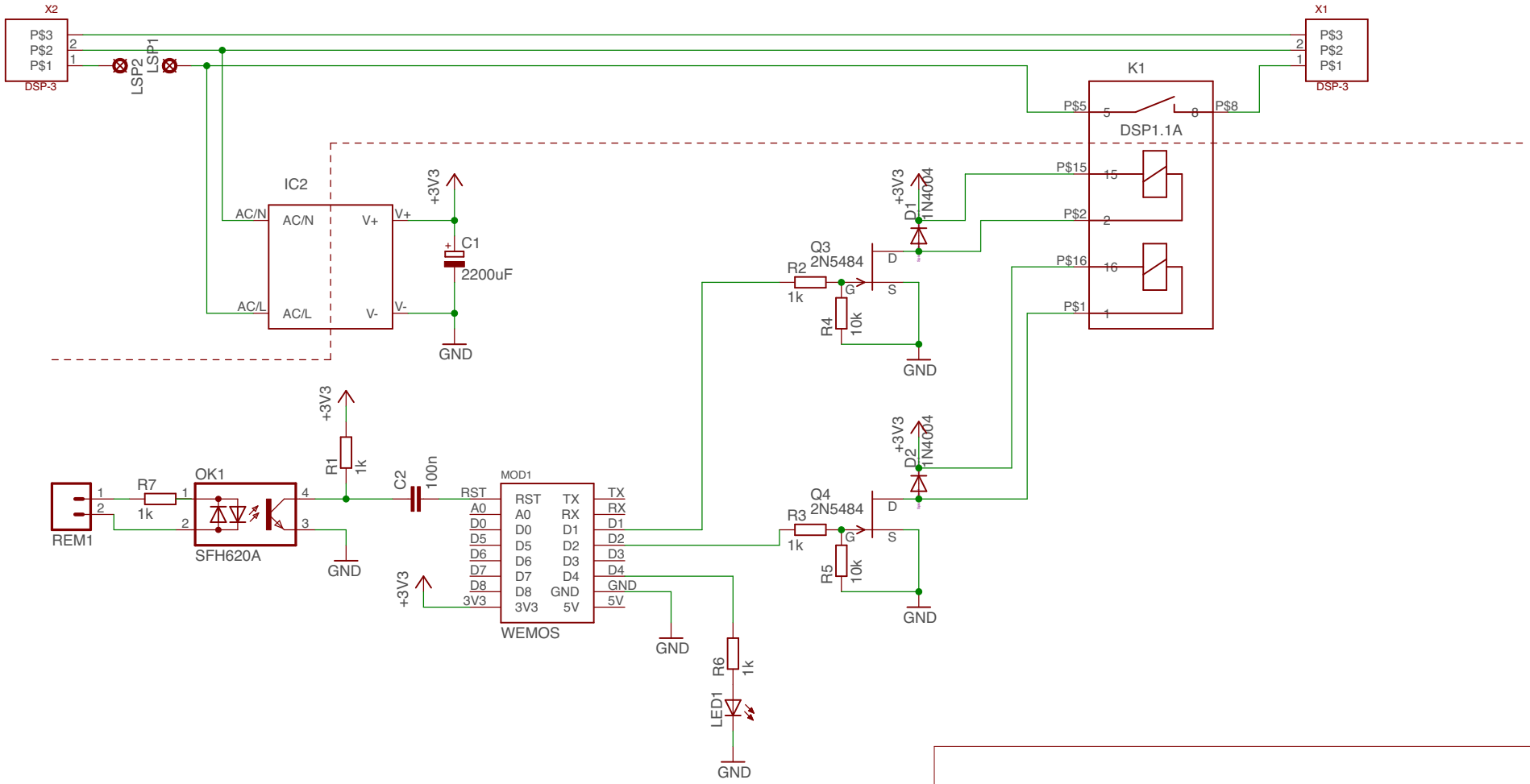


| | |
|---|---|
| TITLE: relai-lit-electrique | |
| Document Number: | REV: |
| Date: 03.03.17 11:41 | Sheet: 1/1 |