Power Architecture (USB-C +5V → +3V3 / +2V5 / +1V8)
File: sheets/power.kicad_sch

USB-C OTG Port (TPS2051C VBUS switch + USB-C)
File: sheets/usbc_otg.kicad_sch

HDMI Receiver (HDMI-A → TPD12S016 → Zynq)
File: sheets/hdmi_rx.kicad_sch

LVDS LCD bank B (panel + backlight power)
File: sheets/lvds_lcd_power.kicad_sch

FMC LPC bank A (LA00.LA15 differential pairs)
File: sheets/fmc_lpc_la_low.kicad_sch

Debug Headers (Zynq PS JTAG 2x7 + STM32 SWD 2x5)
File: sheets/dbg_swd.kicad_sch

SoM Mate J1 bank A (PS MIO + system rails)
File: sheets/som_j1_mio.kicad_sch

SoM Mate J2 bank B (PL bank 13 single-ended)
File: sheets/fmc_lpc_la_low.kicad_sch

Power Monitoring (INA226 on +VIN)
File: sheets/power_mon.kicad_sch

USB-UART Bridge (CP2102N → Zynq PS UART0)
File: sheets/uart_bridge.kicad_sch

Ethernet (PHY MDI → WX5008 magnetics → RJ45)
File: sheets/ethernet.kicad_sch

microSD Card Socket (DM3AT-SF-PEJM5 on Zynq PS SDIO)
File: sheets/microsd.kicad_sch

MIPI Camera (15-pin 1 mm FFC, Pi-camera pinout)
File: sheets/mipi_camera.kicad_sch

FMC LPC bank C (power + clock + JTAG + mgmt)
File: sheets/fmc_lpc_power_clk_jtag.kicad_sch

PMOD Headers (2x Digilent 12-pin Type 1A)
File: sheets/pmod.kicad_sch

SoM Mate J1 bank C (PL power + GND + config)
File: sheets/som_j1_pl_power_gnd.kicad_sch

SoM Mate J2 bank A (PL bank 13 differential pairs)
File: sheets/som_j2_diff_pairs.kicad_sch

SoM Mate J3 bank A (PL bank 35 differential pairs)

USB-C Power Delivery (FYS8302 + USB_C16 + USB-C)
File: sheets/usb_pd.kicad_sch

HDMI Transmitter (Zynq → TPD12S016 → HDMI-A)
File: sheets/hdmi_tx.kicad_sch

LVDS LCD bank A (data + clock + backlight ctrl)
File: sheets/lvds_lcd_signals.kicad_sch

FMC LPC bank B (LA16.LA33 differential pairs)
File: sheets/fmc_lpc_la_high.kicad_sch

Boot Mode Straps + PS Reset (DIP-4 + Tactile)
File: sheets/boot_switches.kicad_sch

SoM Mate J1 bank B (PS auxiliary: clk, JTAG, DDR straps)
File: sheets/som_j1_ps_aux.kicad_sch

SoM Mate J2 bank C (PL bank 13 power + GND + LVDS)
File: sheets/som_j2_power.kicad_sch

SoM Mate J3 bank B (PL bank 35 single-ended LVDS)

Sheet: /	
File: carrier.kicad_sch	
Title: Zynq SoM Carrier	
Size: A0	Date:
KiCad 10.0.1	
Rev:	
v0 1/28	

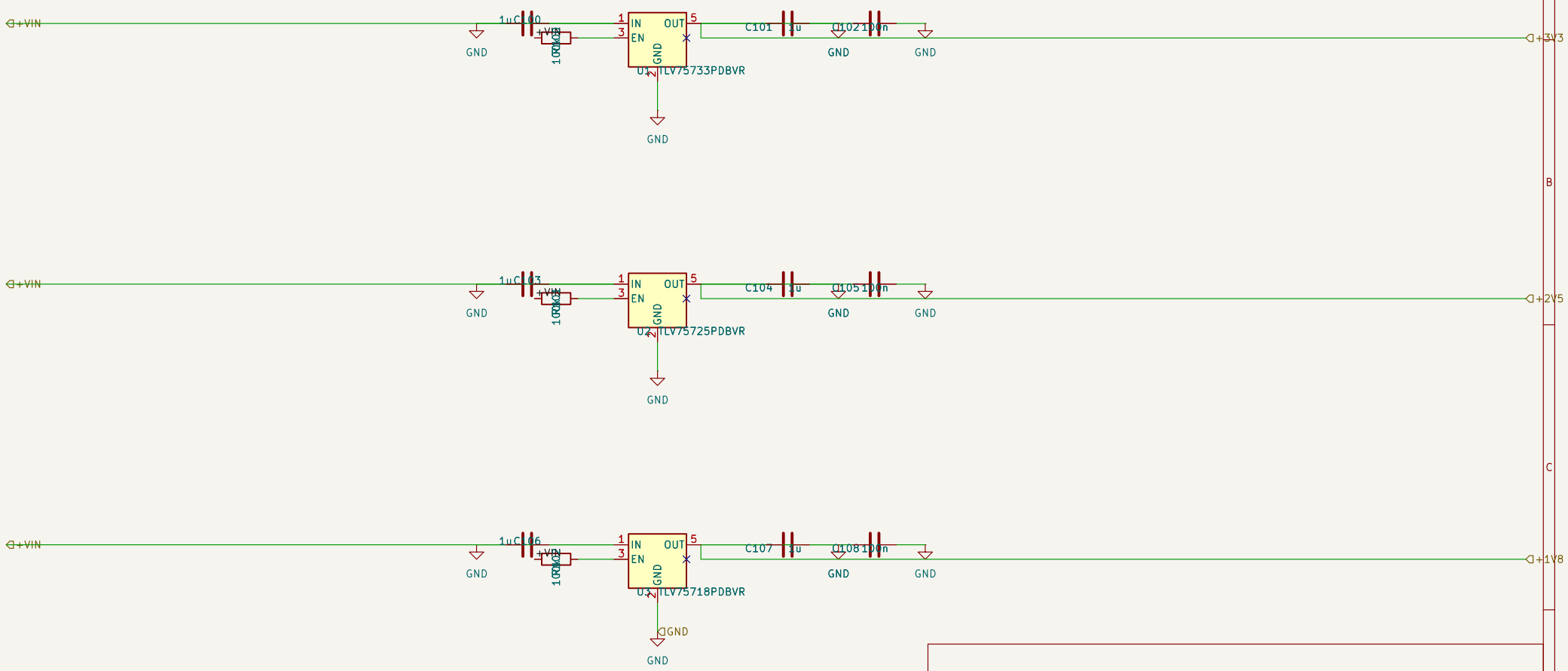

Sheet: /Power Architecture (USB-C +5V → +3V3 / +2V5 / +1V8)/
File: power.kicad_sch

Title: Power Architecture (USB-C +5V → +3V3 / +2V5 / +1V8)

Size: A4	Date:	Rev:
KiCad E.D.A. 10.0.2		Id: 2/28

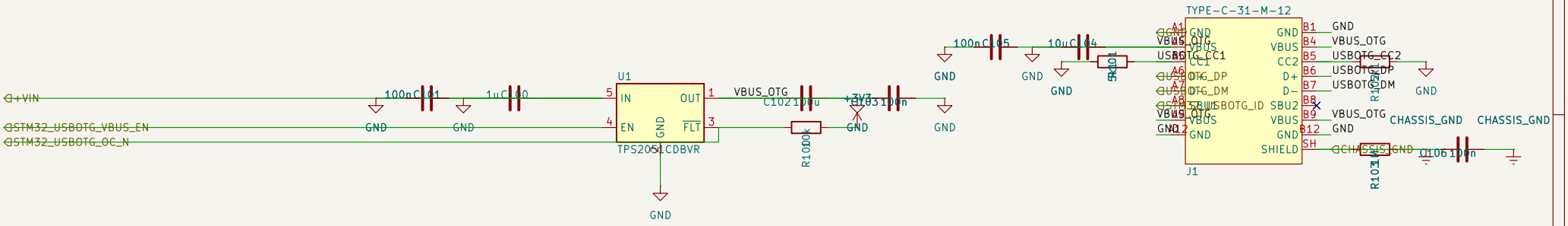

Sheet: /USB-C OTG Port (TPS2051C VBUS switch + USB-C)/
File: usbc_otg.kicad_sch

Title: USB-C OTG Port (TPS2051C VBUS switch + USB-C)

Size: A4	Date:	Rev:
KiCad E.D.A. 10.0.2		Id: 2/28

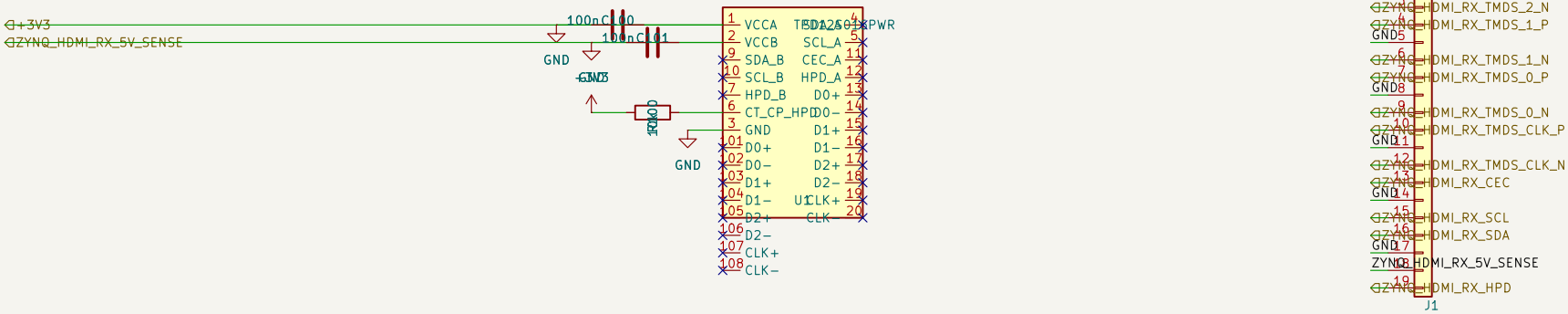

Sheet: /HDMI Receiver (HDMI-A → TPD12S016 → Zynq)/
File: hdmi_rx.kicad_sch

Title: HDMI Receiver (HDMI-A → TPD12S016 → Zynq)

Size: A4	Date:	Rev:
KiCad E.D.A. 10.0.2		Id: 2/28

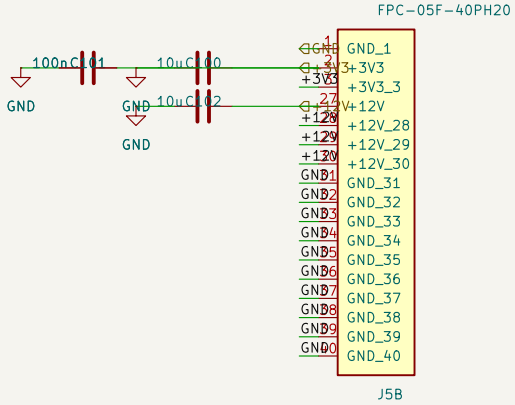

Sheet: /LVDS LCD bank B (panel + backlight power)/
File: lvds_lcd_power.kicad_sch

Title: LVDS LCD bank B (panel + backlight power)

Size: A4	Date:	Rev:
KiCad E.D.A. 10.0.2		Id: 2/28

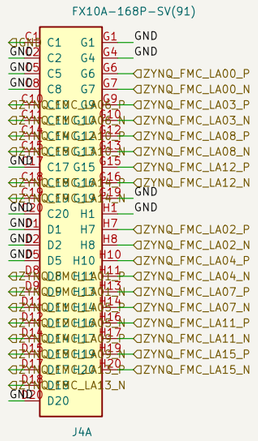

Sheet: /FMC LPC bank A (LA00..LA15 differential pairs)/
File: fmc_lpc_la_low.kicad_sch

Title: FMC LPC bank A (LA00..LA15 differential pairs)

Size: A3	Date:	Rev:
KiCad E.D.A. 10.0.2		Id: 2/28

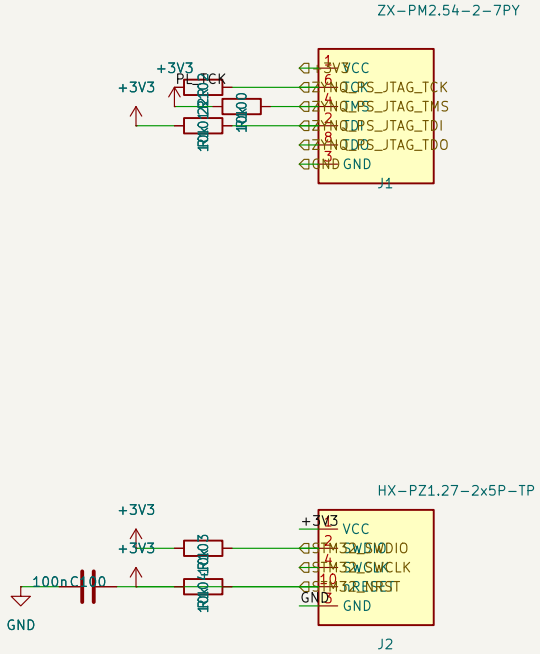

Sheet: /Debug Headers (Zynq PS JTAG 2x7 + STM32 SWD 2x5)/
File: jtag_swd.kicad_sch

Title: Debug Headers (Zynq PS JTAG 2x7 + STM32 SWD 2x5)

Size: A4	Date:	Rev:
KiCad E.D.A. 10.0.2		Id: 2/28

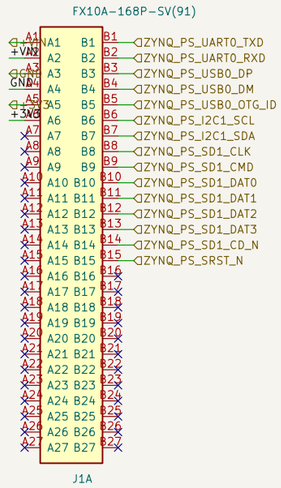

Sheet: /SoM Mate J1 bank A (PS MIO + system rails)/
File: som_j1_mio.kicad_sch

Title: SoM Mate J1 bank A (PS MIO + system rails)

Size: A3	Date:	Rev:
KiCad E.D.A. 10.0.2		Id: 2/28

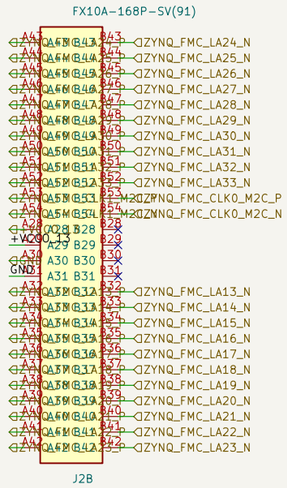

Sheet: /SoM Mate J2 bank B (PL bank 13 single-ended)/
File: som_j2_se.kicad_sch

Title: SoM Mate J2 bank B (PL bank 13 single-ended)

Size: A3	Date:	Rev:
KiCad E.D.A. 10.0.2		Id: 2/28

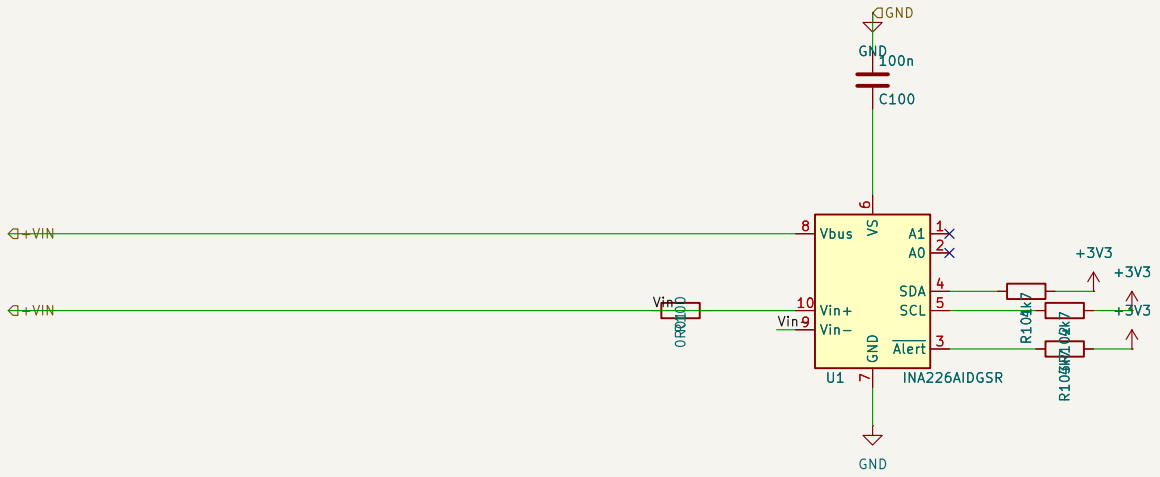

Sheet: /Power Monitoring (INA226 on +VIN)/
File: power_mon.kicad_sch

Title: Power Monitoring (INA226 on +VIN)

Size: A4	Date:	Rev:
KiCad E.D.A. 10.0.2		Id: 2/28

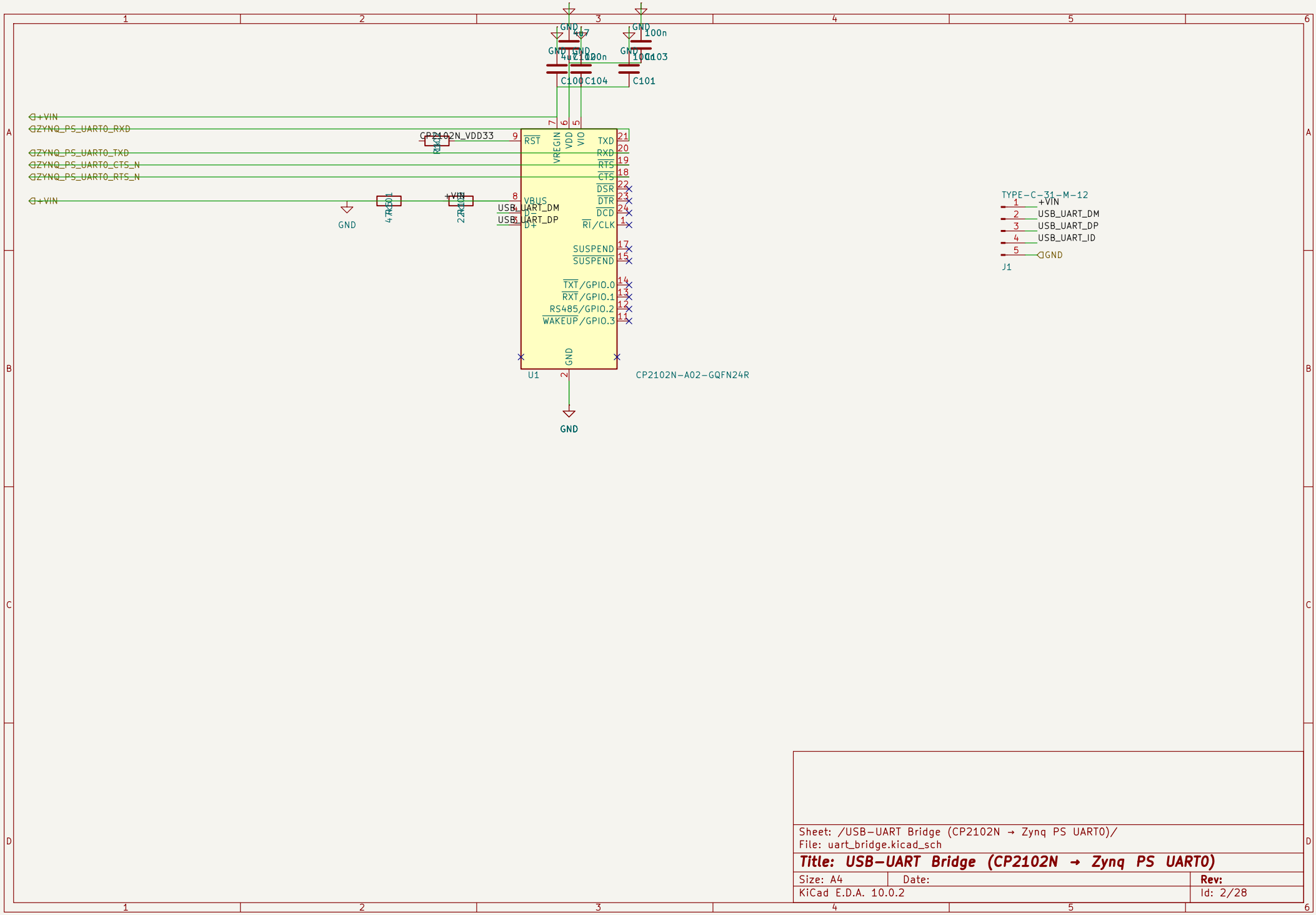

Sheet: /USB-UART Bridge (CP2102N → Zynq PS UART0)/
File: uart_bridge.kicad_sch

Title: USB-UART Bridge (CP2102N → Zynq PS UART0)

Size: A4	Date:	Rev:
KiCad E.D.A. 10.0.2		Id: 2/28

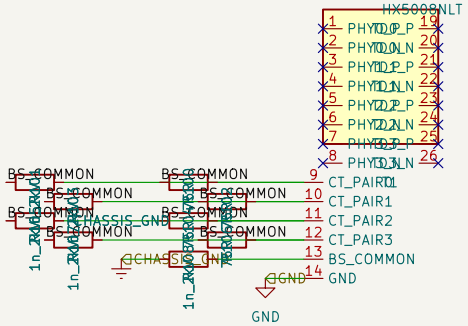

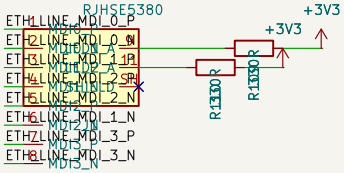

Sheet: /Ethernet (PHY MDI → HX5008 magnetics → RJ45)/
File: ethernet.kicad_sch

Title: Ethernet (PHY MDI → HX5008 magnetics → RJ45)

Size: A4	Date:	Rev:
KiCad E.D.A. 10.0.2		Id: 2/28

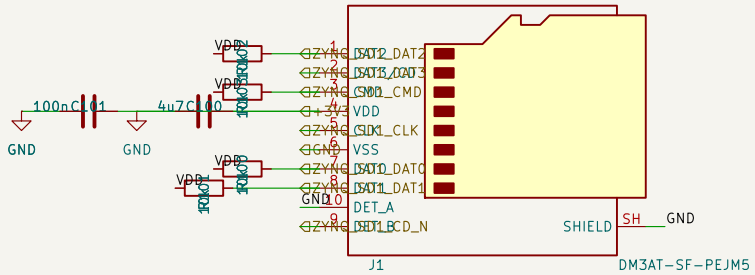

Sheet: /microSD Card Socket (DM3AT-SF-PEJM5 on Zynq PS SD1)/
File: microsd.kicad_sch

Title: microSD Card Socket (DM3AT-SF-PEJM5 on Zynq PS SD1)

Size: A4	Date:	Rev:
KiCad E.D.A. 10.0.2		Id: 2/28

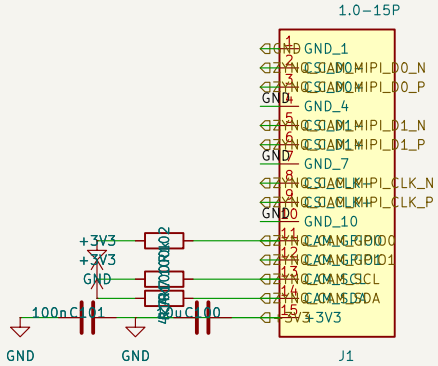

Sheet: /MIPI Camera (15-pin 1 mm FFC, Pi-camera pinout)/
File: mipi_camera.kicad_sch

Title: MIPI Camera (15-pin 1 mm FFC, Pi-camera pinout)

Size: A4	Date:	Rev:
KiCad E.D.A. 10.0.2		Id: 2/28

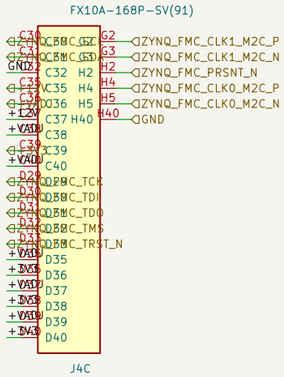

Sheet: /FMC LPC bank C (power + clock + JTAG + mgmt)/
File: fmc_lpc_power_clk_jtag.kicad_sch

Title: FMC LPC bank C (power + clock + JTAG + mgmt)

Size: A3	Date:	Rev:
KiCad E.D.A. 10.0.2		Id: 2/28

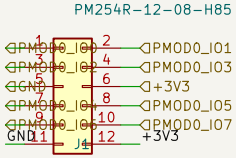

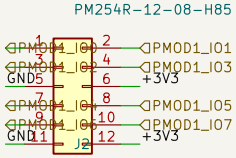

Sheet: /PMOD Headers (2× Digilent 12-pin Type 1A)/
File: pmod.kicad_sch

Title: PMOD Headers (2× Digilent 12-pin Type 1A)

Size: A4	Date:	Rev:
KiCad E.D.A. 10.0.2		Id: 2/28

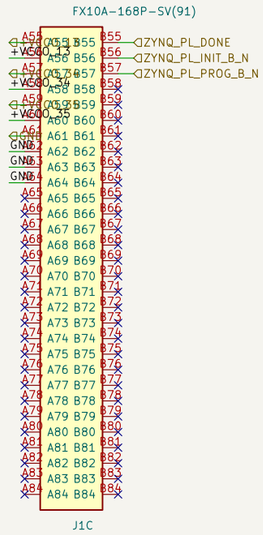

Sheet: /SoM Mate J1 bank C (PL power + GND + config)/
File: som_j1_pl_power_gnd.kicad_sch

Title: SoM Mate J1 bank C (PL power + GND + config)

Size: A3	Date:	Rev:
KiCad E.D.A. 10.0.2		Id: 2/28

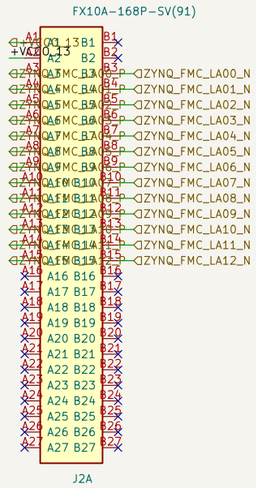

Sheet: /SoM Mate J2 bank A (PL bank 13 differential pairs)/
File: som_j2_diff_pairs.kicad_sch

Title: SoM Mate J2 bank A (PL bank 13 differential pairs)

Size: A3	Date:	Rev:
KiCad E.D.A. 10.0.2		Id: 2/28

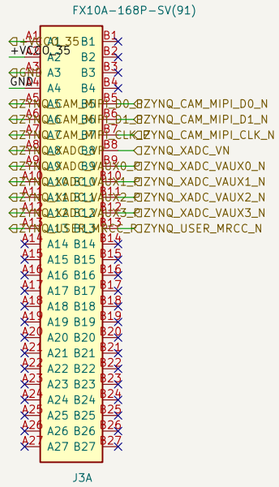

Sheet: /SoM Mate J3 bank A (PL bank 35 differential pairs)/
File: som_j3_diff_pairs.kicad_sch

Title: SoM Mate J3 bank A (PL bank 35 differential pairs)

Size: A3	Date:	Rev:
KiCad E.D.A. 10.0.2		Id: 2/28

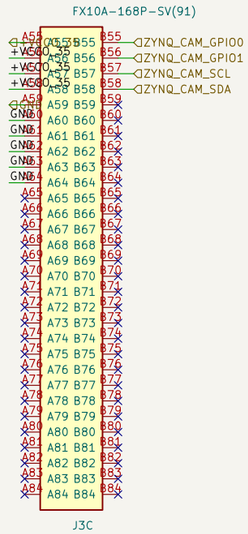

Sheet: /SoM Mate J3 bank C (PL bank 35 power + camera ctrl)/
File: som_j3_power.kicad_sch

Title: SoM Mate J3 bank C (PL bank 35 power + camera ctrl)

Size: A3	Date:	Rev:
KiCad E.D.A. 10.0.2		Id: 2/28

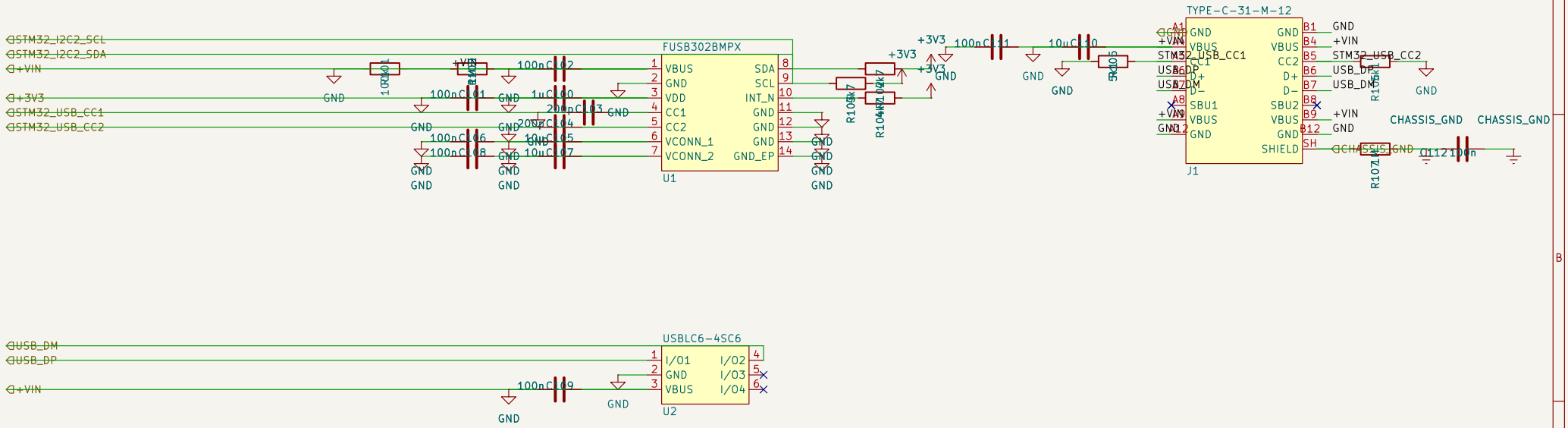

Sheet: /USB-C Power Delivery (FUSB302 + USBLC6 + USB-C)/
File: usb_pd.kicad_sch

Title: USB-C Power Delivery (FUSB302 + USBLC6 + USB-C)

Size: A4	Date:	Rev:
KiCad E.D.A. 10.0.2		Id: 2/28

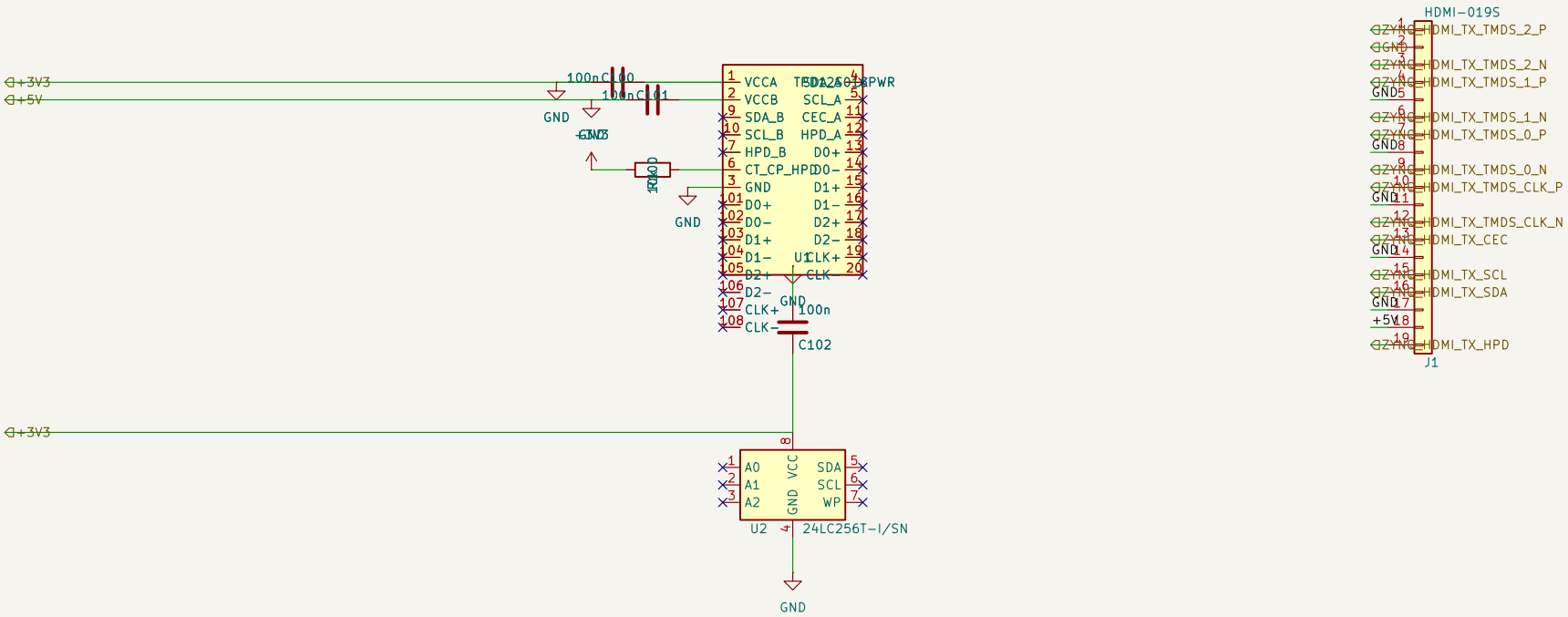

Sheet: /HDMI Transmitter (Zynq → TPD12S016 → HDMI-A)/
File: hdmi_tx.kicad_sch

Title: HDMI Transmitter (Zynq → TPD12S016 → HDMI-A)

Size: A4	Date:	Rev:
KiCad E.D.A. 10.0.2		Id: 2/28

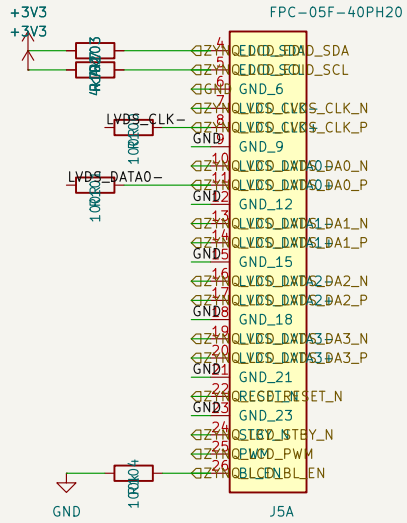

Sheet: /LVDS LCD bank A (data + clock + backlight ctrl)/
File: lvds_lcd_signals.kicad_sch

Title: LVDS LCD bank A (data + clock + backlight ctrl)

Size: A4	Date:	Rev:
KiCad E.D.A. 10.0.2		Id: 2/28

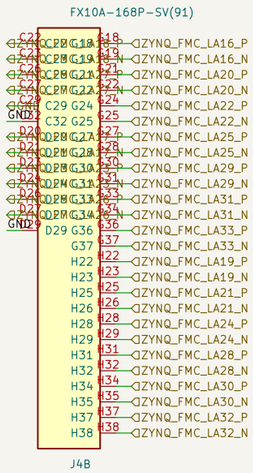

Sheet: /FMC LPC bank B (LA16..LA33 differential pairs)/
File: fmc_lpc_la_high.kicad_sch

Title: FMC LPC bank B (LA16..LA33 differential pairs)

Size: A3	Date:	Rev:
KiCad E.D.A. 10.0.2		Id: 2/28

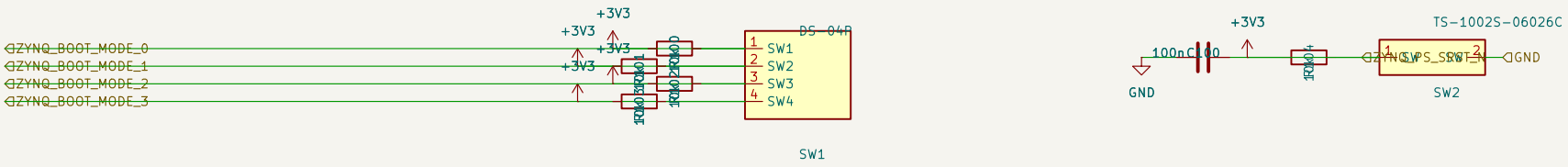

Sheet: /Boot Mode Straps + PS Reset (DIP-4 + Tactile)/
File: boot_switches.kicad_sch

Title: Boot Mode Straps + PS Reset (DIP-4 + Tactile)

Size: A4	Date:	Rev:
KiCad E.D.A. 10.0.2		Id: 2/28

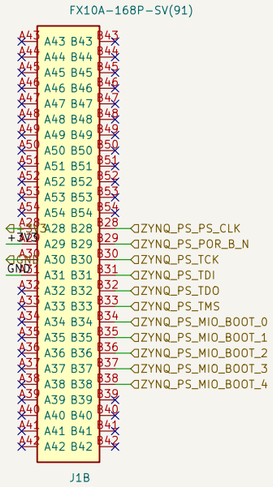

Sheet: /SoM Mate J1 bank B (PS auxiliary: clk, JTAG, DDR straps)/
File: som_j1_ps_aux.kicad_sch

Title: SoM Mate J1 bank B (PS auxiliary: clk, JTAG, DDR straps)

Size: A3	Date:	Rev:
KiCad E.D.A. 10.0.2		Id: 2/28

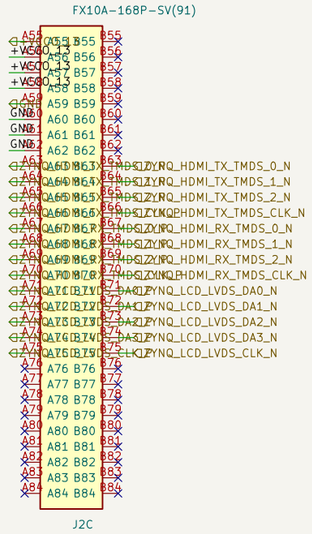

Sheet: /SoM Mate J2 bank C (PL bank 13 power + GND + LVDS)/
File: som_j2_power.kicad_sch

Title: SoM Mate J2 bank C (PL bank 13 power + GND + LVDS)

Size: A3	Date:	Rev:
KiCad E.D.A. 10.0.2		Id: 2/28

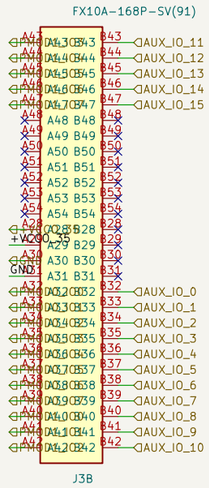

Sheet: /SoM Mate J3 bank B (PL bank 35 single-ended GPIO)/
File: som_j3_se.kicad_sch

Title: SoM Mate J3 bank B (PL bank 35 single-ended GPIO)

Size: A3	Date:	Rev:
KiCad E.D.A. 10.0.2		Id: 2/28