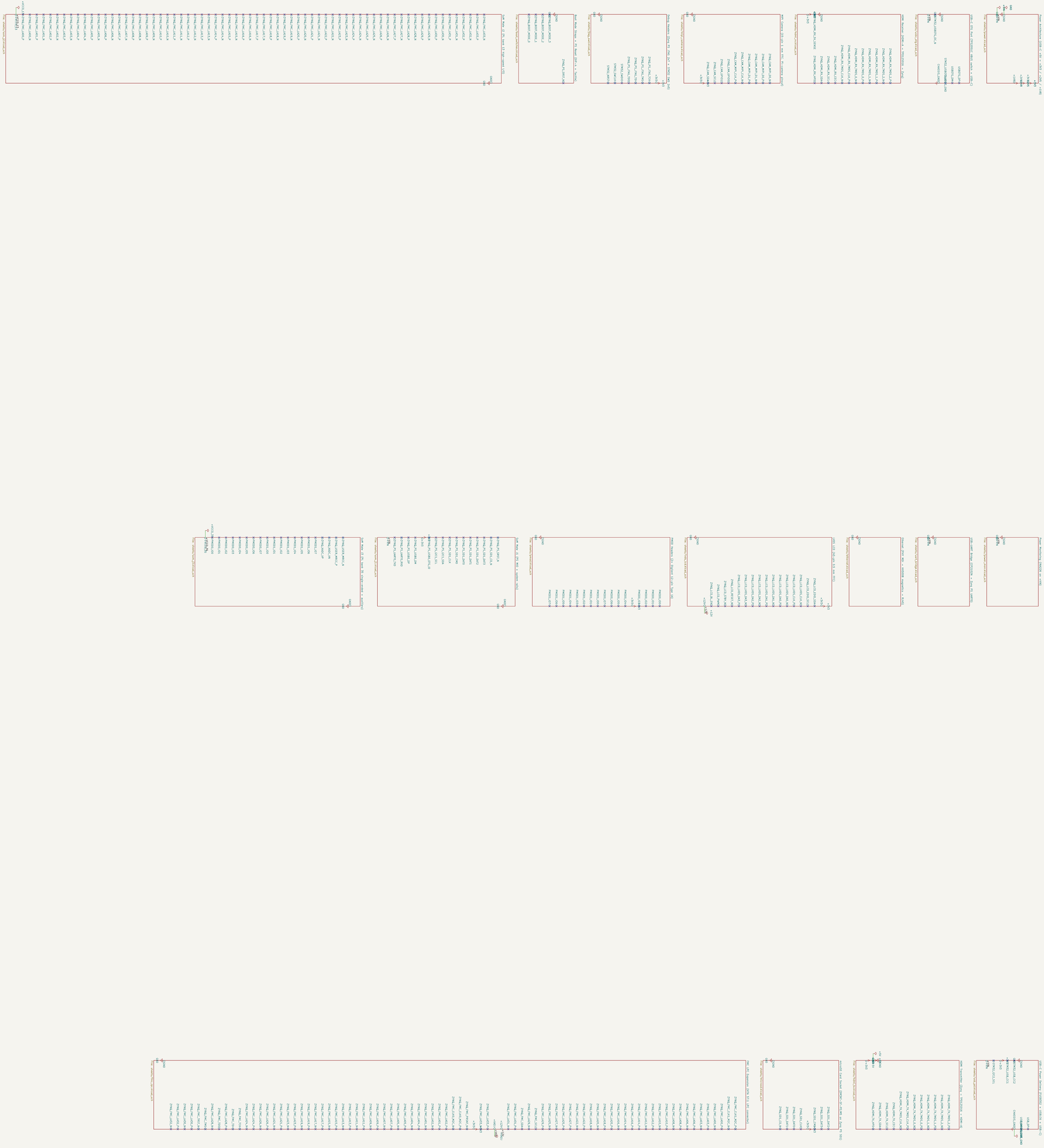
Title: Zong Sam Center

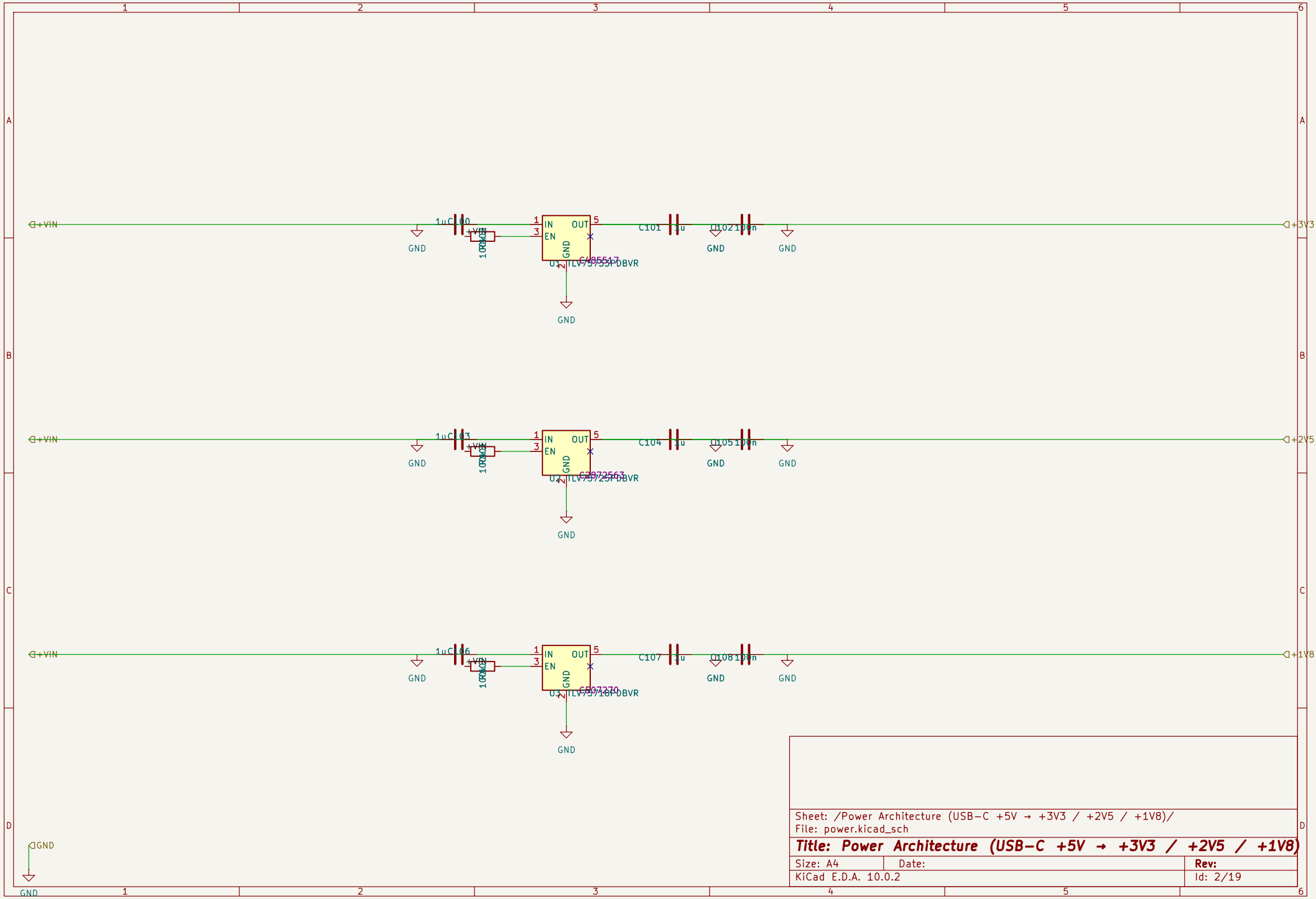

Sheet: /Power Architecture (USB-C +5V → +3V3 / +2V5 / +1V8)/
File: power.kicad_sch

Title: Power Architecture (USB-C +5V → +3V3 / +2V5 / +1V8)

Size: A4	Date:	Rev:
KiCad E.D.A. 10.0.2		Id: 2/19

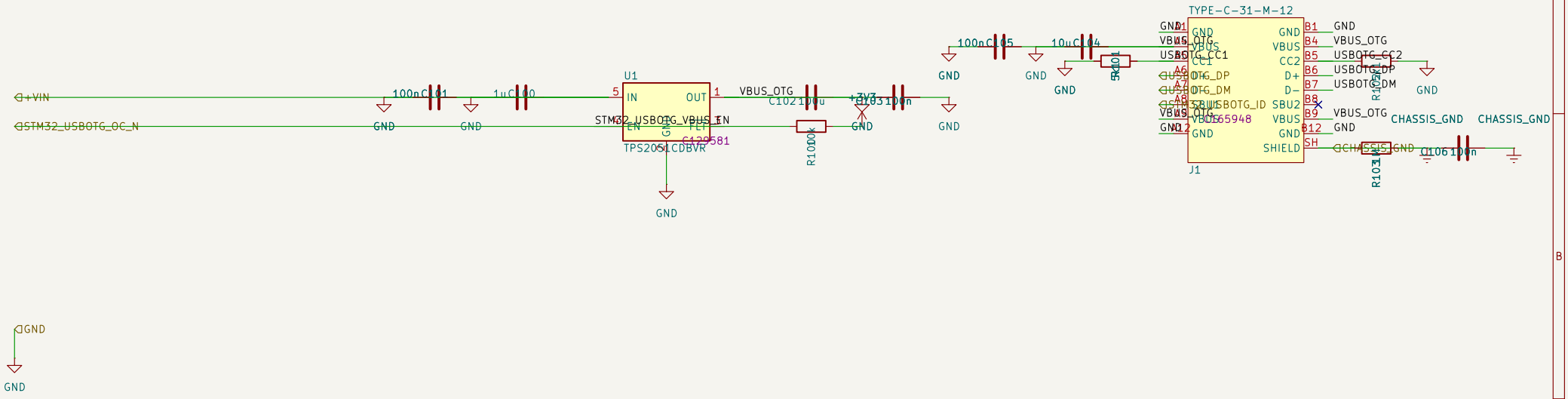

Sheet: /USB-C OTG Port (TPS2051C VBUS switch + USB-C)/
File: usbc_otg.kicad_sch

Title: USB-C OTG Port (TPS2051C VBUS switch + USB-C)

Size: A4	Date:	Rev:
KiCad E.D.A. 10.0.2		Id: 2/19

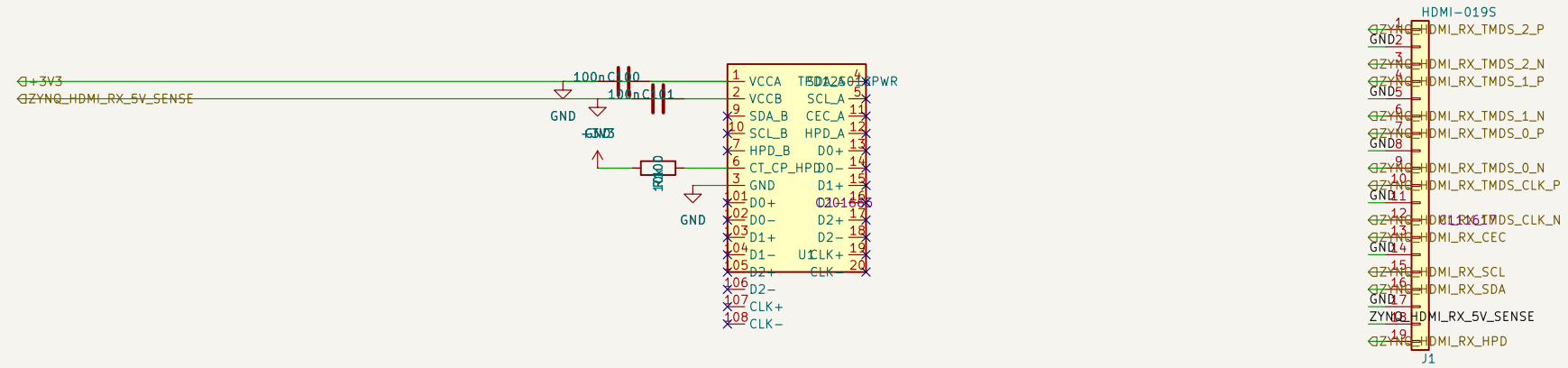

Sheet: /HDMI Receiver (HDMI-A → TPD12S016 → Zynq)/
File: hdmi_rx.kicad_sch

Title: HDMI Receiver (HDMI-A → TPD12S016 → Zynq)

Size: A4	Date:	Rev:
KiCad E.D.A. 10.0.2		Id: 2/19

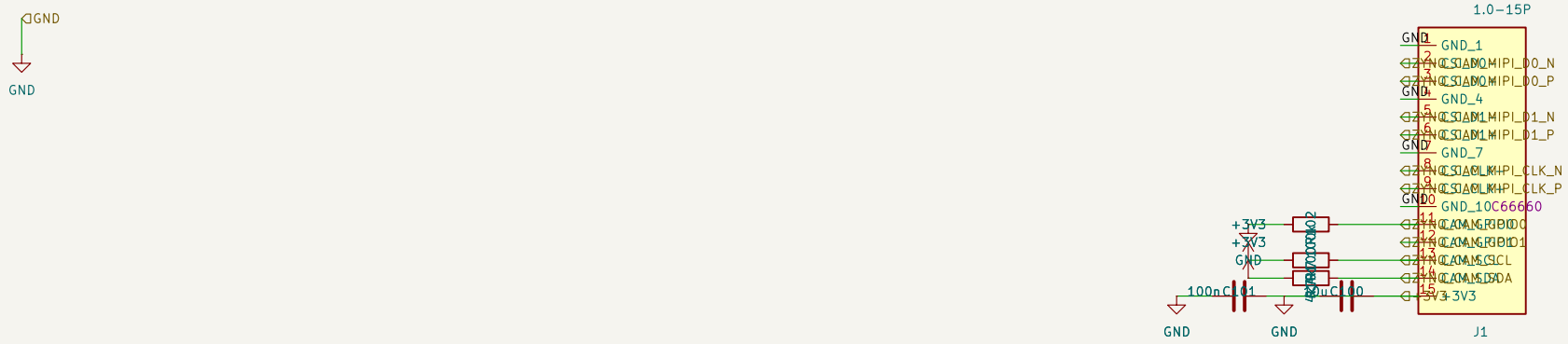

Sheet: /MIPI Camera (15-pin 1 mm FFC, Pi-camera pinout)/
File: mipi_camera.kicad_sch

Title: MIPI Camera (15-pin 1 mm FFC, Pi-camera pinout)

Size: A4	Date:	Rev:
KiCad E.D.A. 10.0.2		Id: 2/19

Sheet: /Debug Headers (Zynq PS JTAG 2x7 + STM32 SWD 2x5)/
File: jtag_swd.kicad_sch

Title: Debug Headers (Zynq PS JTAG 2x7 + STM32 SWD 2x5)

Size: A4	Date:	Rev:
KiCad E.D.A. 10.0.2		Id: 2/19

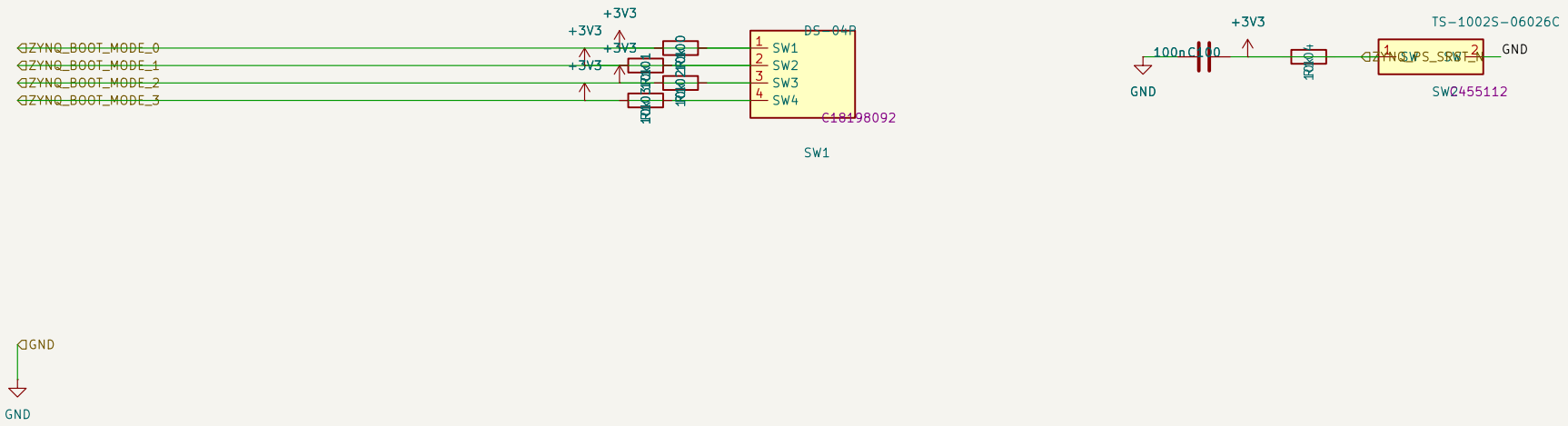

Sheet: /Boot Mode Straps + PS Reset (DIP-4 + Tactile)/
File: boot_switches.kicad_sch

Title: Boot Mode Straps + PS Reset (DIP-4 + Tactile)

Size: A4	Date:	Rev:
KiCad E.D.A. 10.0.2		Id: 2/19

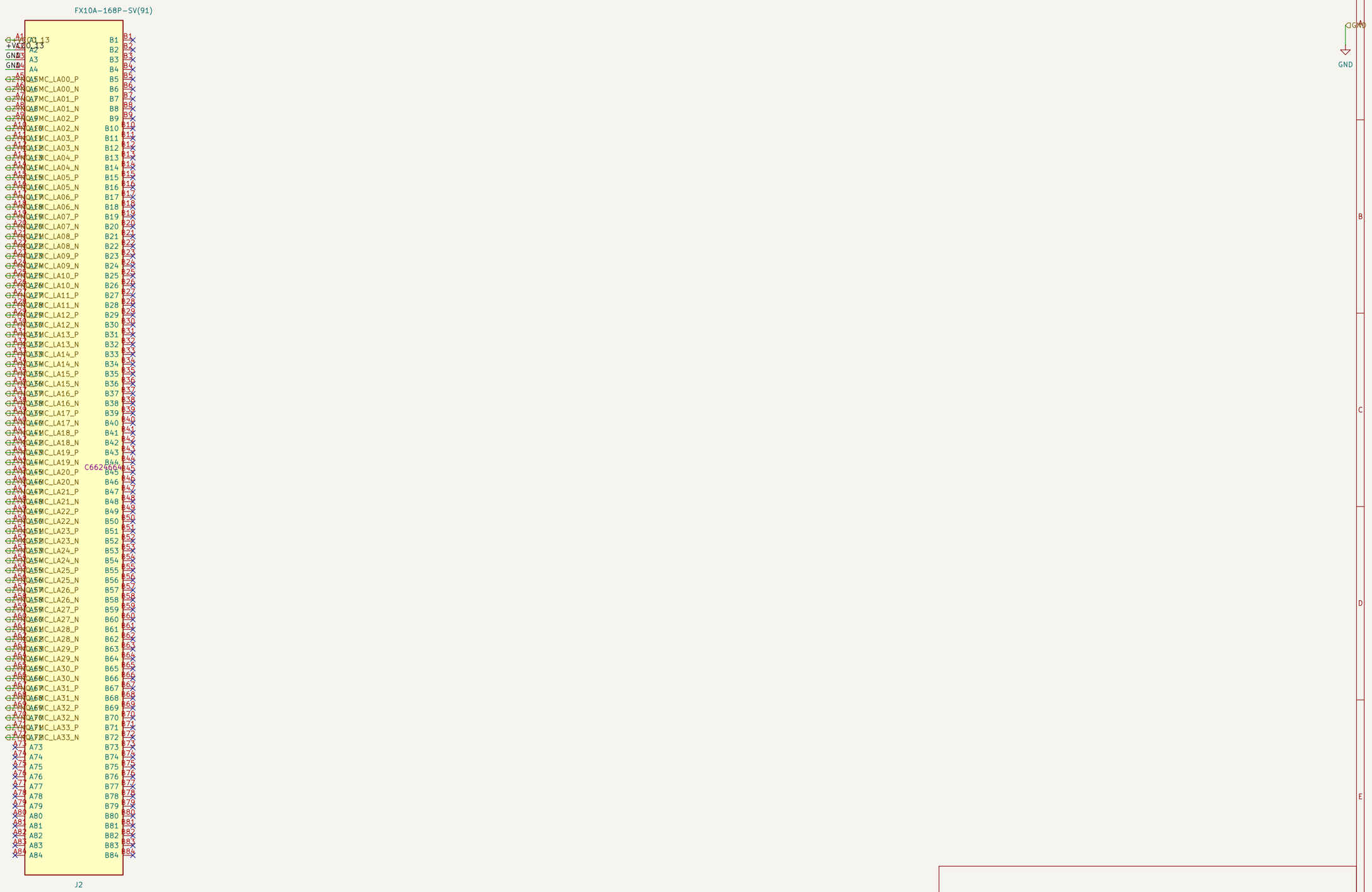

Sheet: /SoM Mate J2 (PL bank 13 high-speed I/O)/
File: som_j2.kicad_sch

Title: SoM Mate J2 (PL bank 13 high-speed I/O)

Size: A3	Date:	Rev:
KiCad E.D.A. 10.0.2		Id: 2/19

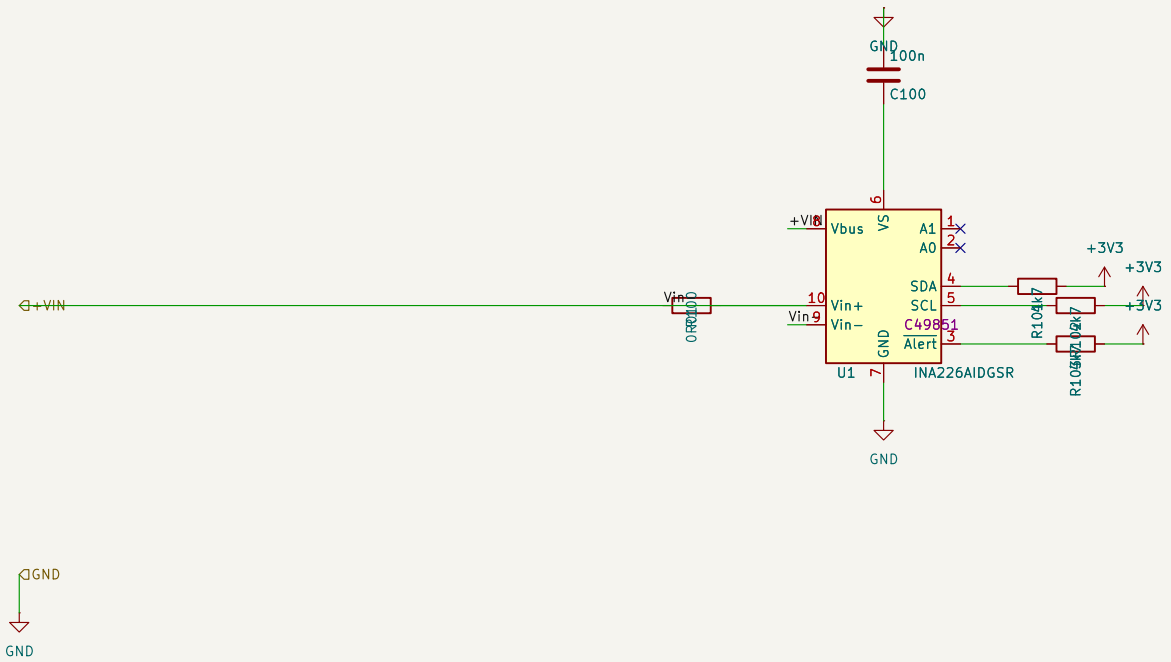

Sheet: /Power Monitoring (INA226 on +VIN)/
File: power_mon.kicad_sch

Title: Power Monitoring (INA226 on +VIN)

Size: A4	Date:	Rev:
KiCad E.D.A. 10.0.2		Id: 2/19

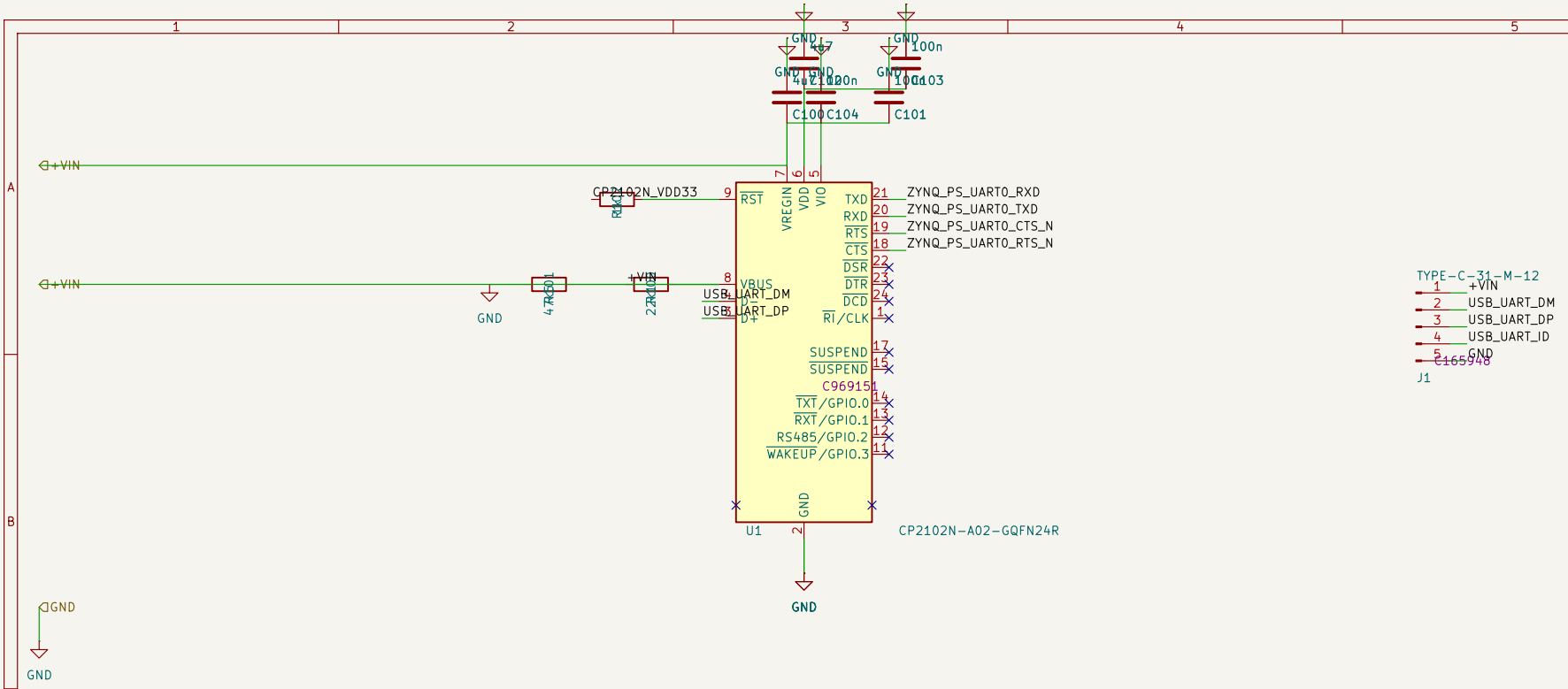

Sheet: /USB-UART Bridge (CP2102N → Zynq PS UART0)/
File: uart_bridge.kicad_sch

Title: USB-UART Bridge (CP2102N → Zynq PS UART0)

Size: A4	Date:	Rev:
KiCad E.D.A. 10.0.2		Id: 2/19

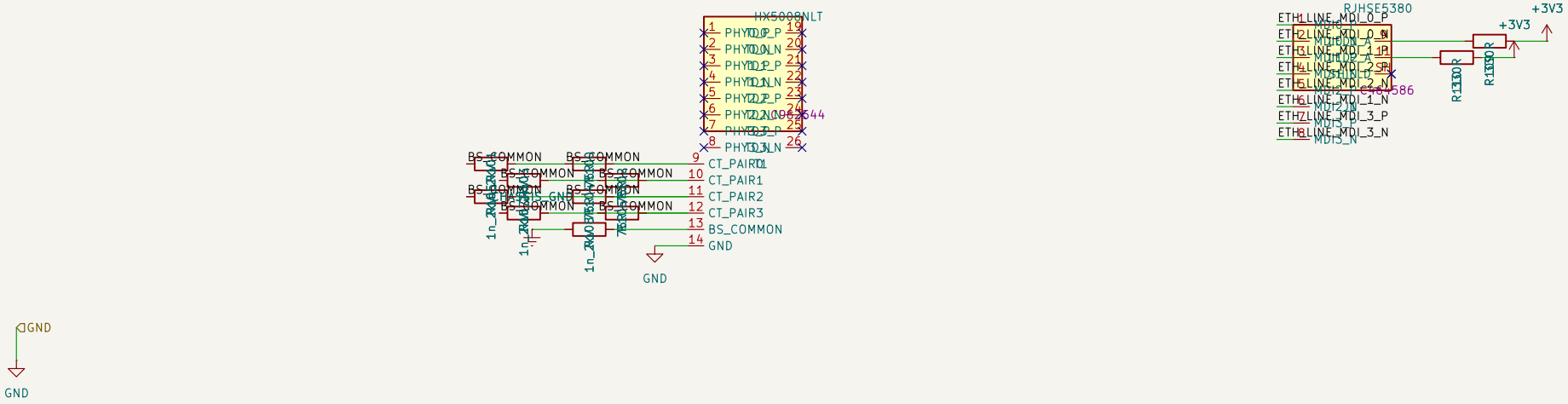

Sheet: /Ethernet (PHY MDI → HX5008 magnetics → RJ45)/
File: ethernet.kicad_sch

Title: Ethernet (PHY MDI → HX5008 magnetics → RJ45)

Size: A4	Date:	Rev:
KiCad E.D.A. 10.0.2		Id: 2/19

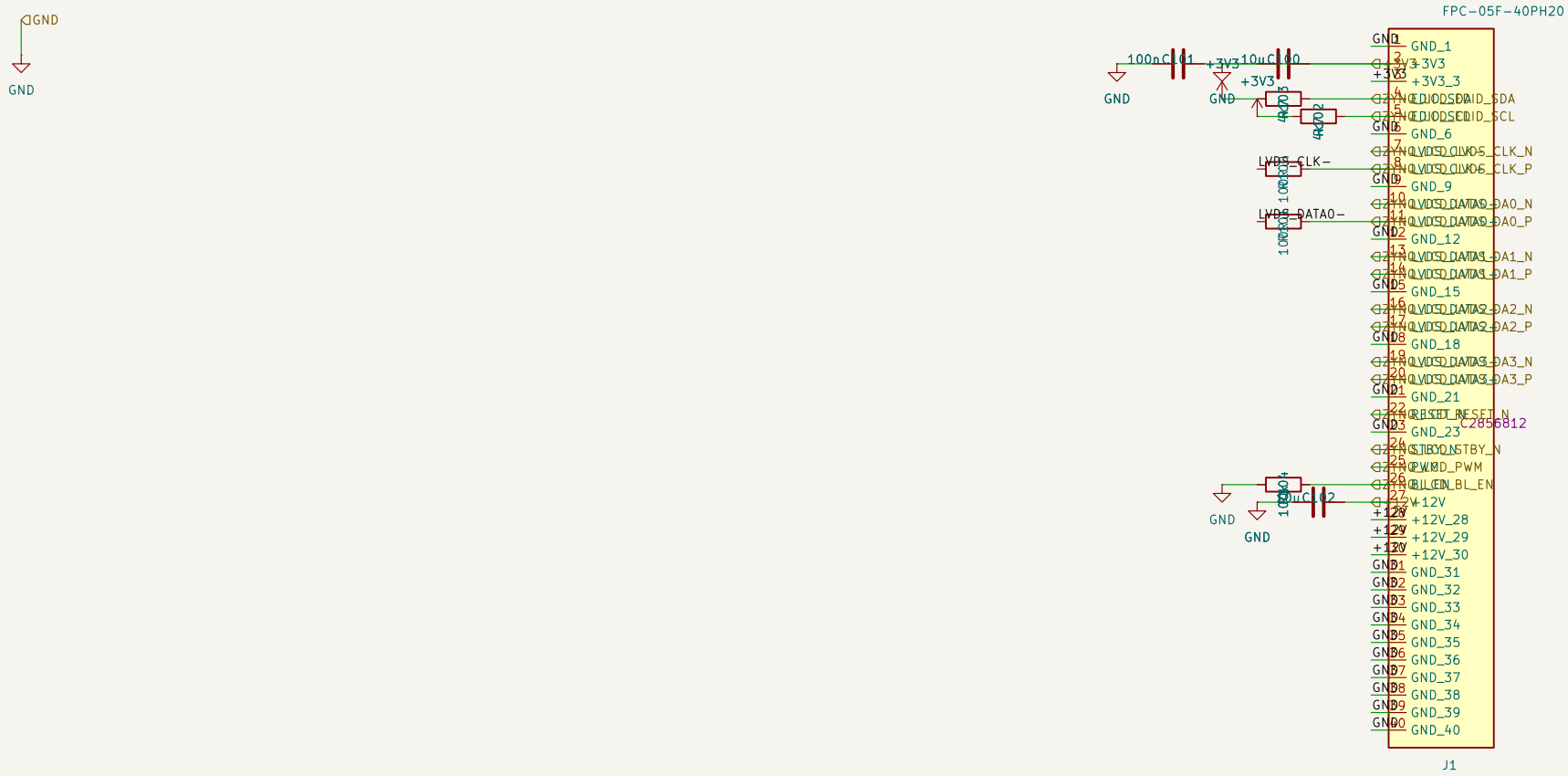

Sheet: /LVDS LCD (40-pin 0.5 mm FFC)/
File: lvds_lcd.kicad_sch

Title: LVDS LCD (40-pin 0.5 mm FFC)

Size: A4	Date:	Rev:
KiCad E.D.A. 10.0.2		Id: 2/19

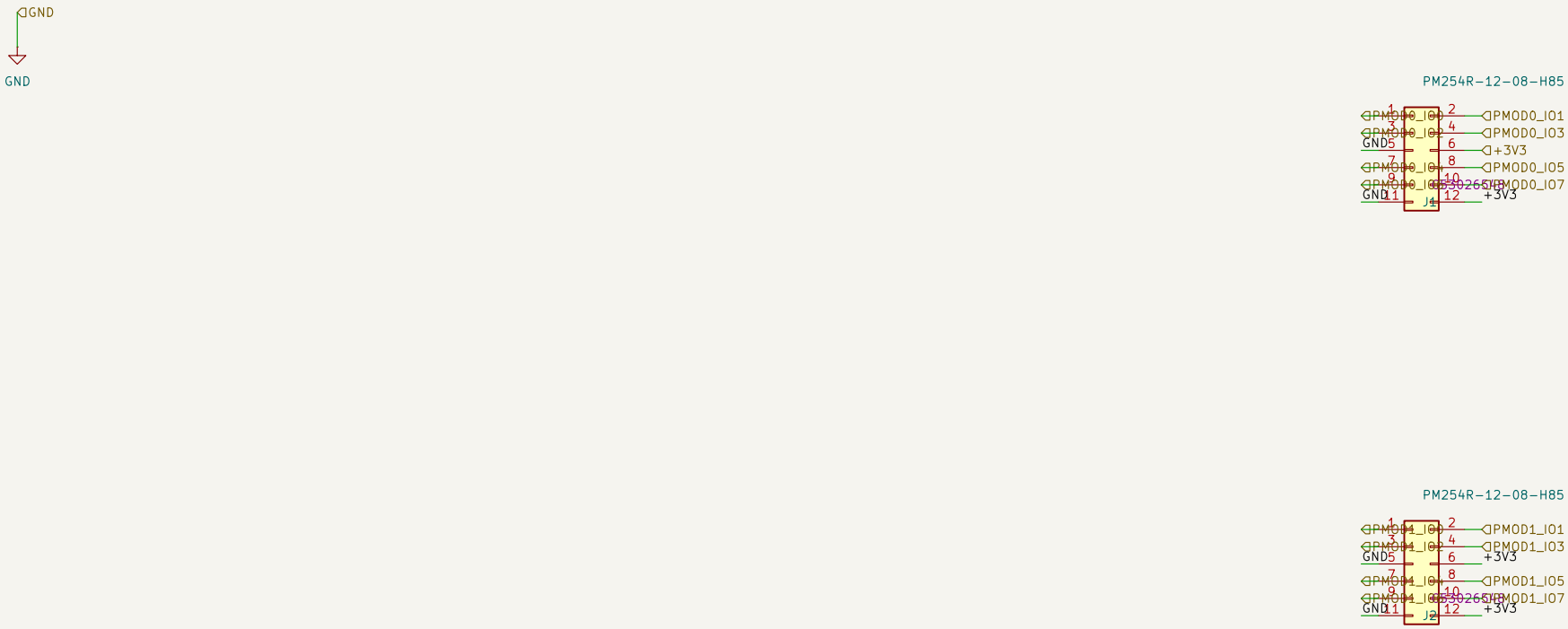

Sheet: /PMOD Headers (2× Digilent 12-pin Type 1A)/
File: pmod.kicad_sch

Title: PMOD Headers (2× Digilent 12-pin Type 1A)

Size: A4	Date:	Rev:
KiCad E.D.A. 10.0.2		Id: 2/19

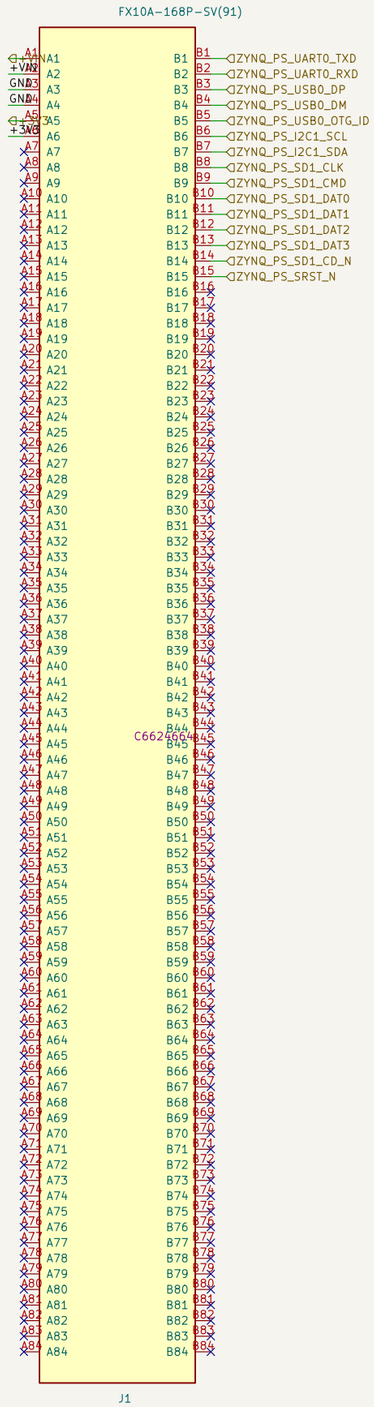

Sheet: /SoM Mate J1 (PS MIO + system rails)/
File: som_j1.kicad_sch

Title: SoM Mate J1 (PS MIO + system rails)

Size: A3	Date:	Rev:
KiCad E.D.A. 10.0.2		Id: 2/19

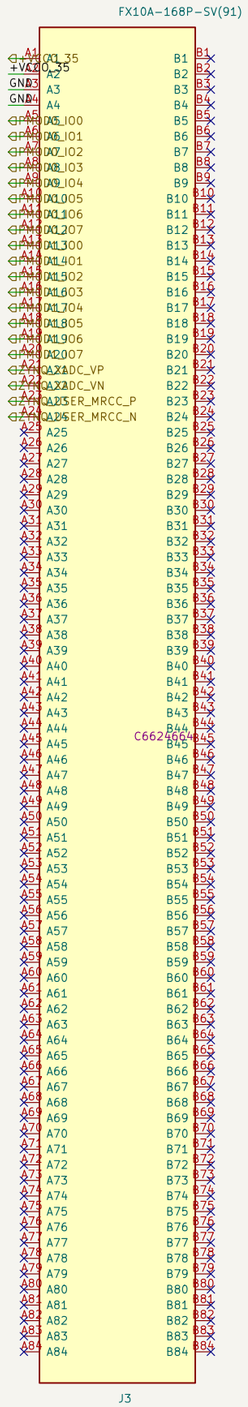

Sheet: /SoM Mate J3 (PL bank 35 single-ended + auxiliary)/
File: som_j3.kicad_sch

Title: SoM Mate J3 (PL bank 35 single-ended + auxiliary)

Size: A3	Date:	Rev:
KiCad E.D.A. 10.0.2		Id: 2/19

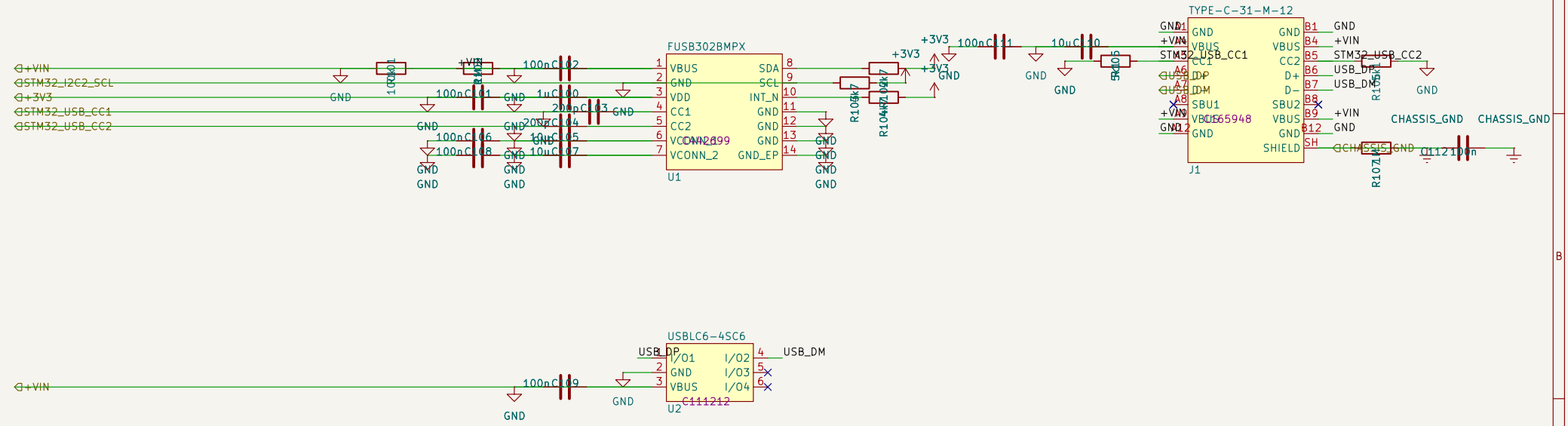

Sheet: /USB-C Power Delivery (FUSB302 + USBLC6 + USB-C)/
File: usb_pd.kicad_sch

Title: USB-C Power Delivery (FUSB302 + USBLC6 + USB-C)

Size: A4	Date:	Rev:
KiCad E.D.A. 10.0.2		Id: 2/19

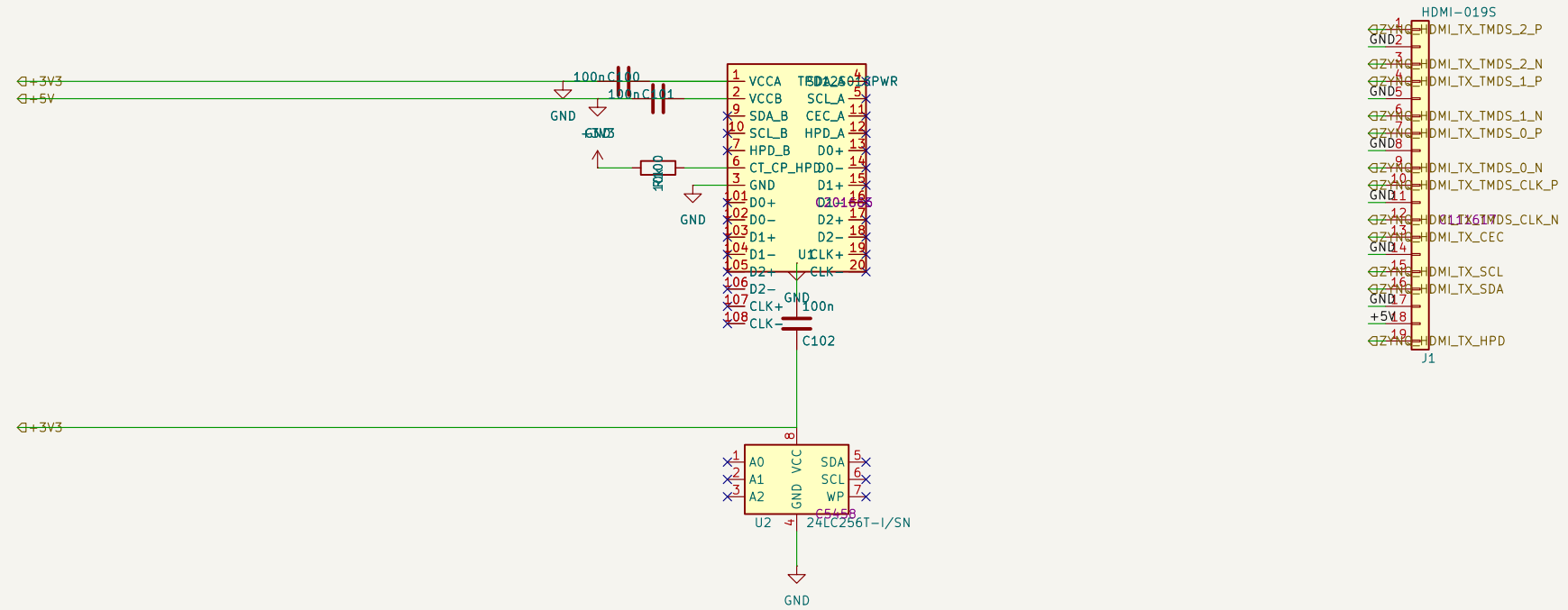

Sheet: /HDMI Transmitter (Zynq → TPD12S016 → HDMI-A)/
File: hdmi_tx.kicad_sch

Title: HDMI Transmitter (Zynq → TPD12S016 → HDMI-A)

Size: A4	Date:	Rev:
KiCad E.D.A. 10.0.2		Id: 2/19

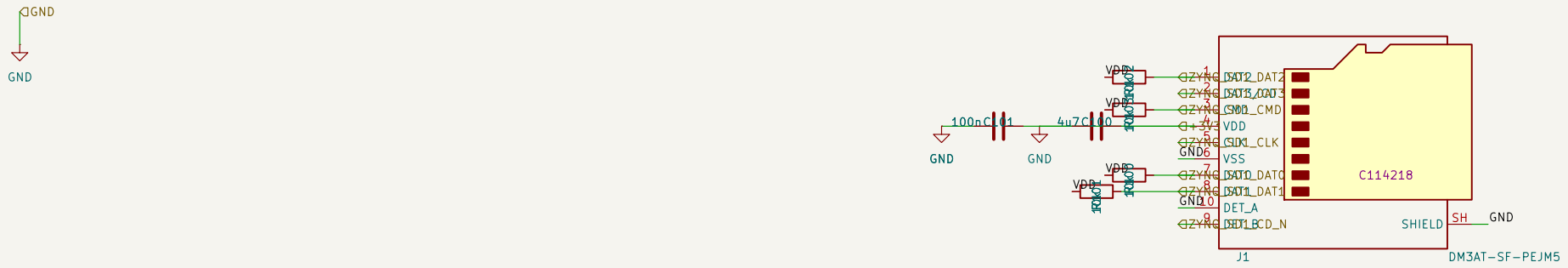

Sheet: /microSD Card Socket (DM3AT-SF-PEJM5 on Zynq PS SD1)/
File: microsd.kicad_sch

Title: microSD Card Socket (DM3AT-SF-PEJM5 on Zynq PS SD1)

Size: A4	Date:	Rev:
KiCad E.D.A. 10.0.2		Id: 2/19

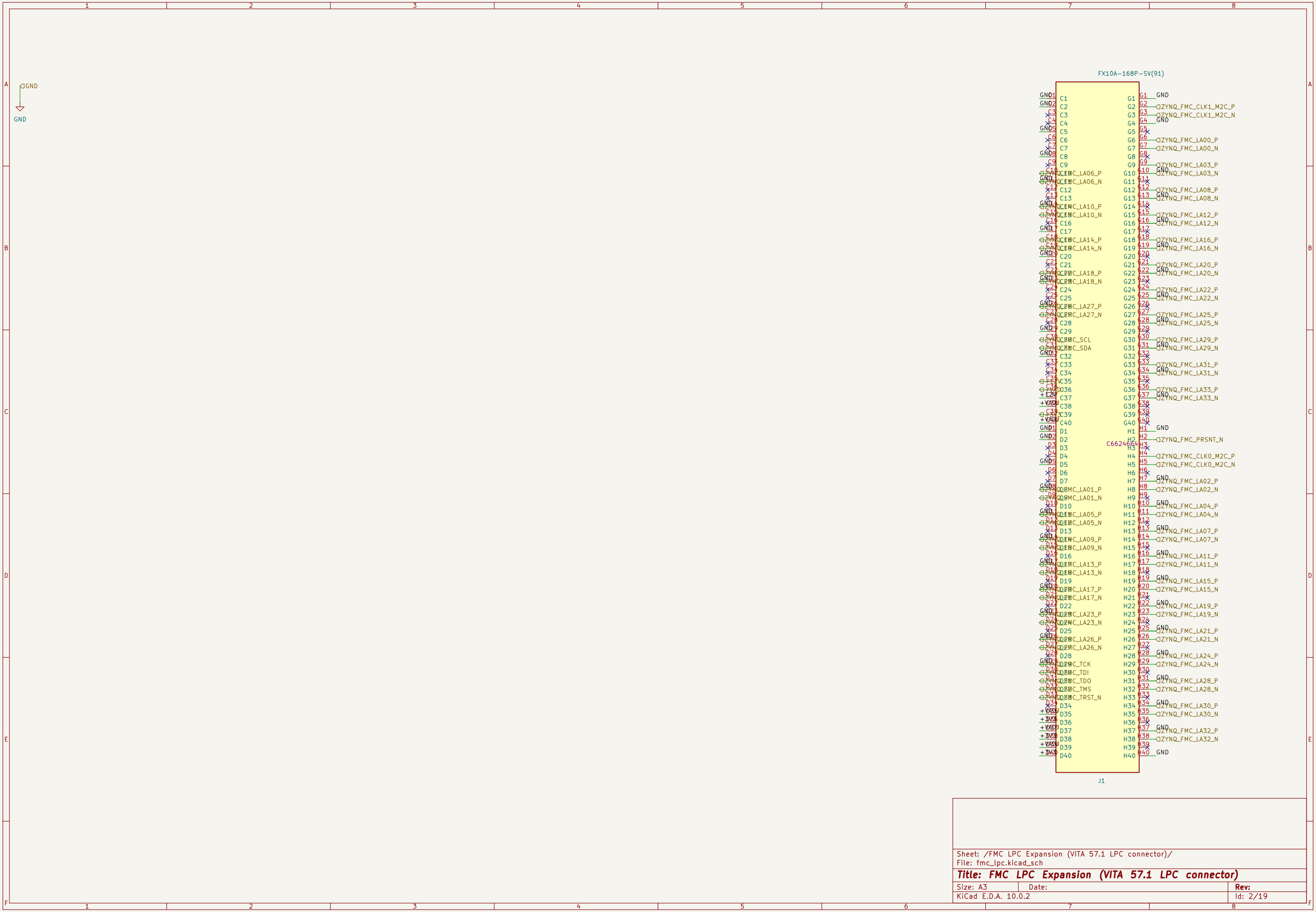

Sheet: /FMC LPC Expansion (VITA 57.1 LPC connector)/
File: fmc_lpc.kicad_sch

Title: FMC LPC Expansion (VITA 57.1 LPC connector)

Size: A3	Date:	Rev:
KiCad E.D.A. 10.0.2		Id: 2/19