Abstract

Process Economics Program Report 211B

HYDROCRACKING OF HEAVY OILS AND RESIDUA

(December 2008)

Hydrocracking of heavy oils and residua is increasingly import to refiners due to increased global production of heavy and extra heavy crude oils coupled with increased demand worldwide for low sulfur middle distillates and residual fuel oils. Upgrading bitumen into synthetic crude oil (SCO) is of great current and future interest due to the planned and forecast large expansion of Canadian tar sands production and subsequent bitumen upgrading by hydrocracking into SCO.

Hydrocracking of residual oils mainly increases the production of high quality middle distillates for blending into jet and diesel fuels while reducing the volume of low value, high sulfur residual fuel oil. Hydrocracking increases the degree of saturation of the products which increases product quality, for example, the diesel fuel's cetane number. Recent interest is the integration of hydrocracking with hydrotreating of the hydrocracked products to produce either very low sulfur middle distillates or low sulfur SCO valued at a premium to many conventional crude oils. Capital and operating costs of the integrated plant is lower than two separate plants.

This PEP Report provides an overview of the heavy oil hydrocracking process, feed and product supply and demand, hydrocracking chemistry, catalysts and hardware technology since PEP Report 228, *Refinery Residue Upgrading*, issued in 2000. We then develop process economics for two bitumen upgrading processes that both integrate hydrocracking with hydrotreating of the hydrocracked gas oil and lighter products to produce SCO. The first process hydrocracks vacuum residue in ebullated bed reactors in a single stage without heavy oil recycle. Bitumen derived naphtha and gas oils from the crude unit are also charged to the single stage hydrotreating section of this plant. The second process hydrocracks atmospheric residue in a slurry reactor with a portion of the residue oil recycled to the hydrocracking reactor. Two-stage hydrotreating is used. Both processes use conventional fixed bed hydrotreating reactors.

SRI Consulting

Report No. 211B

HYDROCRACKING OF HEAVY OIL AND RESIDUA

by RICHARD NIELSEN

December 2008

A private report by the

PROCESS ECONOMICS PROGRAM

Menlo Park, California 94025

SRI CONSULTING®

A Division of Access Intelligence, LLC

SRIC agrees to assign professionally qualified personnel to the preparation of the Process Economics Program's reports and will perform the work in conformance with generally accepted professional standards. No other warranties expressed or implied are made. Because the reports are of an advisory nature, neither SRIC nor its employees will assume any liability for the special or consequential damages arising from the Client's use of the results contained in the reports. The Client agrees to indemnify, defend, and hold SRIC, its officers, and employees harmless from any liability to any third party resulting directly or indirectly from the Client's use of the reports or other deliverables produced by SRIC pursuant to this agreement

For detailed marketing data and information, the reader is referred to one of the SRI Consulting programs specializing in marketing research. THE CHEMICAL ECONOMICS HANDBOOK Program covers most major chemicals and chemical products produced in the United States and the WORLD PETROCHEMICALS PROGRAM covers major hydrocarbons and their derivatives on a worldwide basis. In addition the SRIC DIRECTORY OF CHEMICAL PRODUCERS services provide detailed lists of chemical producers by company, product, and plant for the United States, Western Europe, Canada, and East Asia, South America and Mexico.

CONTENTS

GLOSSARY ..... **xiv**

1 INTRODUCTION **1-1**

2 CONCLUSION **2-1**

3 SUMMARY **3-1**

COMMERCIAL ASPECTS 3-1

TECHNICAL ASPECTS 3-2

ECONOMIC ASPECTS 3-4

4 INDUSTRY STATUS **4-1**

PROCESSING BITUMEN 4-3

SYNTHETIC CRUDE OIL 4-4

CRUDE OIL SUPPLY 4-5

Conventional Crude Oil Supply 4-5

Synthetic Crude Supply 4-6

RESIDUAL OIL MARKET 4-7

MIDDLE DISTILLATE MARKETS 4-9

Product Demand 4-9

Price Trends 4-13

PRODUCT SPECIFICATIONS 4-15

Diesel Fuels 4-15

Premium Diesel Fuel 4-19

Diesel Fuel Additives 4-20

Distillate Fuel Oils 4-24

Gas Turbine Fuel Oils 4-25

Jet Fuel 4-26

Kerosene 4-27

CONTENTS (Continued)

Residual Fuels 4-27

CATALYTIC METAL PRICES 4-28

INSTALLED RESID HYDROCRACKING CAPACITY 4-31

New Construction 4-35

5 GENERAL PROCESS REVIEW 5-1

CANADIAN CRUDE OILS 5-1

FEEDSTOCK CHARACTERIZATION 5-5

Analytical Techniques 5-5

Resid Composition 5-7

Asphaltenes 5-11

Unit Structure 5-13

Characteristics 5-13

Sulfur and Nitrogen 5-16

CHEMISTRY 5-18

Reactions 5-18

Thermal Hydrocracking 5-21

Mechanism for Paraffins 5-22

Ring Opening 5-23

Mercaptan Recombination 5-24

Sediments and Heavy Polynuclear Aromatics 5-25

Thermodynamics 5-27

Kinetics 5-30

CATALYSTS 5-37

Mechanism 5-38

Commercial Catalysts 5-40

Advanced Catalysts 5-42

Carbon Substrate 5-42

CONTENTS (Continued)

Pillared Clay 5-43

Cobalt Saponite 5-44

NiMo/Ti Zeolite 5-44

Limonite 5-45

6 RESIDUE HYDROCRACKING PROCESS REVIEW 6-1

HYDROTREATING VERSUS HYDROCRACKING 6-1

REACTORS 6-3

Fixed Bed Reactors 6-4

Ebullating Bed Reactors 6-4

Slurry-Phase Reactors 6-6

TYPES OF HYDROCRACKING PROCESS 6-6

HEAVY OIL HYDROCRACKING PROCESSES 6-7

H-Oil$_{RC}$ 6-8

H-Oil$_{DC}$ 6-10

LC-Fining 6-11

ISOFINING 6-13

KOBELCO SPH 6-13

UOP Slurry Hydrocracking Process 6-15

$(HC)_3$ ™ Technology 6-15

Veba Combi-Cracking Process 6-16

CANMET 6-16

Micorcat-RC Process 6-18

MRH Process 6-20

Residue Hydroconversion Process 6-21

China University of Petroleum Slurry-Bed Process 6-23

ALTERNATIVE HYDROGEN SOURCES 6-23

OPERATING CONDITIONS 6-24

CONTENTS (Continued)

LHSV 6-24

Recycle 6-24

Slurry Process Conditions 6-26

YIELDS 6-32

DESIGN CONSIDERATIONS 6-34

Reactors 6-34

Internals 6-35

Quench Zone 6-35

Gas Separation 6-35

Liquid Product Separation 6-36

Corrosion 6-36

Catalyst Unloading 6-37

Environmental Considerations 6-37

7 VACUUM RESIDUE HYDROCRACKING ECONOMICS 7-1

PROCESS DESCRIPTION 7-1

Hydrocracking Section (100) 7-2

Hydrotreating Section (200) 7-20

Hydrocracking Section (300) 7-21

PROCESS DISCUSSION 7-21

Feedstock 7-21

Hydrocracking Sections (100 and 300) 7-22

Hydrotreating Section (200) 7-22

Hydrogen System 7-22

Materials of Construction 7-23

Waste Treatment and Disposal 7-23

COST ESTIMATES 7-23

Capital Costs 7-24

CONTENTS (Concluded)

Production Costs 7-27

Profitability 7-30

8 ATMOSPHERIC RESIDUE HYDROCRACKING ECONOMICS 8-1

PROCESS DESCRIPTION 8-1

Hydrocracking Section (100) 8-2

Hydrotreating Section (200) 8-2

PROCESS DISCUSSION 8-19

Feedstock 8-19

Hydrocracking Sections (100 and 300) 8-19

Hydrotreating Section (200) 8-19

Hydrogen System 8-20

Materials of Construction 8-20

Waste Treatment and Disposal 8-20

COST ESTIMATES 8-20

Capital Costs 8-20

Production Costs 8-24

Profitability 8-27

APPENDIX A: PATENT SUMMARY TABLES A-1

APPENDIX B: DESIGN AND COST BASES B-1

APPENDIX C: CITED REFERENCES C-1

APPENDIX D: PATENT REFERENCES BY COMPANY D-1

APPENDIX E: PROCESS FLOW DIAGRAM E-1

FIGURES

4.1 Refinery Residue Hydrocracking 4-2

4.2 World Demand for Residual Fuel Oil 4-8

4.3 Distribution U.S. Sales of Middle Distillate Fuel Oils by End Use, % 4-10

4.4 U.S. Middle Distillate Sales 4-11

4.5 Historical U.S. Fuel Oil Price 4-13

4.6 European, Asian and U.S. Diesel Fuel Prices 4-14

4.7 Price History of Molybdenum, 1997 - 2007 4-28

4.8 Price History of Nickel, 1997 - 2007 4-29

4.9 Price History of Cobalt, 1997 - 2007 4-29

4.10 World Residue Hydrocracking Refineries, Number Distribution 4-34

4.11 World Residue Hydrocracking Refineries, Capacity Distribution 4-35

5.1 Molecular Evolution in the Hydrotreating Reactor 5-20

5.2 Molecular Evolution in the Hydrocracking Reactor 5-21

5.3 Cetane Number Improvement by Ring Opening 5-23

5.4 Postulated Reaction Mechanism for Fluoranthene Hydroconversion 5-24

5.5 Hydrocracking Reaction Chain for Polyaromatics and Naphtheno-Aromatic Compounds 5-32

5.6 Seven Lump Kinetic Reation Model for Hydrocracking Vacuum Residue Feedstock 5-36

6.1 Schematic Representation of the H-Oil Ebullating Bed Reactor 6-5

6.2 LC-Fining Ebullating Bed Reactor 6-6

6.3 H-Oil$_{RC}$ Process 6-9

6.4 H-Oil$_{DC}$ Process 6-11

6.5 LC-Fining Process 6-12

6.6 Kobelco SPH Process 6-14

6.7 Canmet Process 6-17

6.8 Microcat-RC Process 6-19

6.9 MRH Process 6-20

FIGURES (Concluded)

6.10 The Residue Hydroconversion (RHC) Process 6-22

7.1 Vacuum Residue Hydrocracking E-3

8.1 Atmospheric Residue Hydrocracking by Slurry Process..... E-7

TABLES

3.1 Summary of Cost Estimates for Hydrocracking VR and AR 3-5

4.1 Typical Bitumen from Thermal Production 4-3

4.2 Refinery Constraints and Modifications for Oil Sands Crude Processing..... 4-5

4.3 World Crude Oil Supply by Region..... 4-6

4.4 Forecast U.S. Residual Fuel Oil Price and Consumption 4-9

4.5 World Demand for Middle Distillates 4-12

4.6 ULSD Fuel Implementation Schedule 4-15

4.7 Diesel Fuel Grades..... 4-16

4.8 Relationship of Diesel Fuel Properties to Composition and Performance Property 4-17

4.9 ASTM D975 and Carb Requirements for Diesel Fuel Oils..... 4-18

4.10 European Automotive Diesel Fuel Specifications (EN 590)..... 4-19

4.11 NCWM Premium Diesel Property Requirements 4-20

4.12 Types of Diesel Fuel Additives 4-21

4.13 Common Diesel Fuel Additive Types and Predominant Blend Locations..... 4-23

4.14 ASTM D396 - Detailed Requirements for Fuel Oils 4-24

4.15 ASTM D2880 - Detailed Requirements for Gas Turbine Fuel Oils 4-25

4.16 ASTM D1655 - Detailed Requirements of Aciation Turbine Fuel..... 4-26

4.17 ASTM D3699 - Detailed Requirements for Kerosene 4-27

4.18 World Hydrocracking Capacity Summary, B/CD (Number of Refineries)..... 4-31

4.19 Residue Hydrocracking Refineries Capacities..... 4-32

4.20 Residue Hydrocrackers - Global Distribution of Capacities 4-34

4.21 Announced New Hydrocracking Construction Projects 4-36

5.1 Typical Canadian Crude Oil and Resid Properties 5-2

5.2 Properties of Parent Cnadian Crude Oils..... 5-3

5.3 Sulfur and Nitrogen Analysis of Sara Fraction of Canadian Crude Oils 5-3

5.4 Properties of Heavy Crude Oils and Athabasca Bitumen and Resids 5-4

5.5 Yields of Atmospheric and Vacuum Residue from Different Heavy Crude Oils.... 5-5

TABLES (Continued)

5.6 Summary of the Analytical Procedures Used for Characterization of Heavy Oil Fractions 5-6

5.7 Characteristics of Four Petroleum Residues 5-7

5.8 Modified Sara Analysis of Vacuum Residues from Chinese and Middle Eastern Crudes 5-7

5.9 Properties of Three Vacuum Bottoms from Canadian Crude Oils 5-8

5.10 Components of Vacuum Residues (WT% on Heavy Oil/Bitumen) 5-9

5.11 Characteristics of Athabasca Bitumen Vacuum Fractions Obtained by Supercritical Fluid Extraction 5-9

5.12 Characterization of SFEF Residue End Fraction and Whole Residue 5-10

5.13 Characterization of Asphaltenes from Saudi Arabian Heavy and Medium Crude Oils 5-12

5.14 Characterization of Asphaltenes from Vacuum Residue from Selected Crude Oils 5-14

5.15 Hydrocracking Conversion of Asphaltenes from Three Sources 5-15

5.16 Bulk Properties and Summary of Sulfur and Nitrogen Species in HVGO and DMO 5-17

5.17 Thermal Hydrocracking of Polyaromatics Derived from Cold Lake Vacuum Bottoms 5-21

5.18 Elemental and Metal Analysis of Sediments and Vacuum Residue Asphaltenes 5-26

5.19 Yields of Solvent Defined Sediment Fractions 5-27

5.20 Thermodynamics of Major Hydrocracking Reactions 5-28

5.21 Bond Dissociation Energies 5-29

5.22 Hydroprocessing Reactions and Enthalpy of Reaction 5-29

5.23 Rate Constants for Hydrocracking of Maya Atmospheric Residue 5-31

5.24 Relative Reaction Rates for Groups of Hydrocracking Reactions Shown in Figure 5.5 5-33

5.25 Reation Rate Constants and Activation Energies for Reations During Hydrocracking of Ural Vacuum Residue 5-35

5.26 Rate Constants and Kinetic Parameters for Hydrocracking of Vacuum Residue Over Slurried Pyrite Catalyst and Slurried Mixed Pyrite and Activated Carbon Catalyst 5-37

TABLES (Continued)

5.27 Effect of Particle Size and Shape on Hydrodesulfurization Activity 5-40

5.28 Commercial Heavy Oil Hydrocracking Catalysts 5-41

5.29 Properties of Feedstock and Products 5-45

5.30 Properties of Limonite..... 5-46

5.31 Characterization of Offshore Brazil Marlim Vacuum Residue..... 5-46

5.32 Comparison of Limonite Catalysts for Hydrocracking Activity and Yields..... 5-47

5.33 Slurry Hydrocracking of Marlim Vacuum Residue Results 5-48

6.1 Range of Partial Pressure and Conversion for Hydrotreating and Hydrocracking 6-2

6.2 Types of Reactors for Hydroconversion of Residues..... 6-3

6.3 H-Oil Process Feedstock and Product Data 6-10

6.4 LC-Fining Process Product Yields from Residues from Arabian Light and Heavy Crude Oils 6-12

6.5 Properties of Atmospheric Topped Bitumen and Kobelco SPH Product Yields and Properties 6-15

6.6 Vera Combi-Cracking Process Yields 6-16

6.7 Canmet Process 6-17

6.8 Microcat Process Yields from Hydrocracking Cold Lake Heavy Oil Vacuum Residuum 6-19

6.9 MRH Process Feedstock and Product Data 6-21

6.10 RHC Process Yields 6-22

6.11 Jobo - Morichal Vacuum Residue Feed and First Pass Product Properties..... 6-25

6.12 Properties of Vacuum Residue Product After Successive Recycle Reactor Passes 6-26

6.13 Effect of LHSV on Slurry Hydrocracking of Ural Vacuum Residue..... 6-28

6.14 Effect of Temperature on Slurry Hydrocracking of Ural Vacuum Residue..... 6-30

6.15 Effect of Hydrogen Partial Pressure on Slurry Hydrocracking of Ural Vacuum Residue..... 6-31

6.16 Conditions and Yield Data on Hydrocracking Middle East Residue 6-32

6.17 Resid Hydrocracking Yields by the LC-Fining Process..... 6-33

TABLES (Concluded)

6.18 Ural Vacuum Residue Yields from H-Oil Process 6-33

7.1 Design Bases and Assumptions 7-3

7.2 Feedstock and Product Characterizations 7-5

7.3 Bitumen Vacuum Residue Hydrocracking Stream Flows 7-6

7.4 Bitumen Vacuum Residue Hydrocracking Process Major Equipment 7-16

7.5 Bitumen Vacuum Residue Hydrocracking Process Utilities Summary 7-19

7.6 Bitumen Vacuum Residue Hydrocracking Process Total Capital Investment 7-25

7.7 Bitumen Vacuum Residue Hydrocracking Process Capital Investment by Section 7-26

7.8 Bitumen Vacuum Residue Hydrocracking Process Production Costs 7-28

7.9 Effect of SCO Market Value on Pretax ROI 7-30

8.1 Design Bases and Assumptions 8-3

8.2 Feedstock and Product Characterizations 8-5

8.3 Bitumen Atmospheric Residue Hydrocracking Stream Flows 8-6

8.4 Bitumen Atmospheric Residue Hydrocracking Major Equipment 8-16

8.5 Bitumen Atmospheric Residue Hydrocracking Utilities Summary 8-18

8.6 Bitumen Atmospheric Residue Slurry Hydrocracking Total Capital Investment 8-22

8.7 Bitumen Atmospheric Residue Slurry Hydrocracking Capital Investment by Section 8-23

8.8 Bitumen Atmospheric Residue Slurry Hydrocracking Production Costs 8-25

8.9 Effect of SCO Market Value on Pretax ROI 8-28

GLOSSARY

Symbol or Term	Definition
304SS	Grade 304 stainless steel
316L SS	Grade 316L stainless steel
Å	Ångström (1 E-10 m)
µm	One millionth of a metre
ABB	Asea Brown Boveri (Lummus)
ANSI	American National Standards Institute
APC	Air Products & Chemicals, Inc.
API	American Petroleum Institute
APM	22% Cr, 6.0% Al alloy
ARA	Amsterdam Rotterdam Antwerp
ASTM	American Society for Testing Materials
ASTM	American Standards & Testing Materials Institute
ATL	Atlantic
ATR	Autothermal reformer
AUD	Australian dollar
Avails	Availability of cargoes
Avgas	Aviation gasoline for piston engines
Backwardation	Market situation where prices are highest in the nearest date periods and are lower in forward delivery dates
Barge	A vessel carrying oil usually on rivers - containing between 8,000 to 50,000 bbl or weighing 1000 to 10000 mt.
Barrel	A volumetric unit of measure for crude oil and petroleum products. 1 barrel equals 42 US
bbl	barrels of petroleum
BDO	1,4-butane diol
BFW	Boiler feedwater
Bill of Lading	Documentation associated with a specific cargo of oil and is signed by the captain of the ship and the contract supplier
Blendstock	A component combined with other materials to produce a finished refined product.
BLI	battery limits investment
bn	billions

1 INTRODUCTION

Hydrocracking of heavy oils and residua is increasing in importance due to two main factors:

- Increased production of heavy and extra heavy crude oils and, lately, planned expansion of Canadian bitumen production and its upgrading by hydrocracking into synthetic crude oil (SCO).
- Increased global demand for low sulfur middle distillate fuels and low sulfur residual fuel oils.

Heavy crudes, extra heavy crudes and bitumen contain high amounts of heavy oil and residua compared to lighter crude oils.

Heavy oils are a class of petroleum distillation fractions characterized as boiling above about 650°F (343°C) and having relatively high gravity (often less than 20 API), low hydrogen-to-carbon ratios, and high carbon residue. Residue is the heaviest subclass of heavy oils, boiling above about 975°F (524°C). Bitumen is the heavy oil obtained from tar sands.

Compared to other Canadian heavy oils, bitumens contain less saturated compounds (16-17% compared to 23-30%), more resins (37% vs. 29-33%) and more asphaltenes (18-21% vs. 10-16%). A conventional Alberta crude oil contains still higher amounts of saturated compounds (53%) and therefore considerably lower concentrations of resins (19%) and asphaltenes (3%). Bitumen and their residue oils usually also contain significantly higher amounts of sulfur, nitrogen and other heteroatom compounds than conventional heavy crude oils. Sulfur in the bitumen and its residua is about 5-6.4% compared to about 3 to 3.5% sulfur in Arabian heavy, Orinco and Maya heavy crude oils.

During hydrocracking, heavy oils are cracked at high temperature to lower molecular weight, lower boiling compounds in the presence of hydrogen at high pressure over a bifunctional catalyst. Hydrocracking catalysts are bifunctional catalysts, composed of hydrogenation-dehydrogenation catalyzing metals on an acidic support that provides the cracking activity.

In this PEP Report, we review the heavy oil hydrocracking process with emphasis on developments since PEP Report 228, *Refinery Residue Upgrading*, issued in 2000. Market related information on crude oil, SCO and other product supply and demand; fuel product specifications and catalytic metal price history is presented in Section 4. Section 5 reviews oil properties, the fundamental chemistry of the process and catalysts. Processes and hardware technologies are then reviewed in Section 6.

We next develop process economics for two bitumen upgrading processes that both integrate hydrocracking with hydrotreating of the hydrocracked gas oil and lighter products to produce SCO. The first process (Section 7) hydrocracks vacuum residue in ebullated bed reactors. Bitumen derived naphtha and gas oils from the crude unit are also charged to the single stage hydrotreating section of this plant. The second process (Section 8) hydrocracks atmospheric residue in a slurry reactor and employs two-stage hydrotreating. In both processes, conventional fixed bed hydrotreating reactors are used.

2 CONCLUSIONS

From our technical and economic analysis, combined with our review of the literature and patents, we conclude:

1. World production of conventional crude oil is forecast to grow 1.1%/yr from 2005 to 2015 and also 1.1%/yr from 2015 to 2030. North American production is forecast to increase by 0.35%/yr from 2005 to 2015 and then to decline by 0.1%/yr to 2030.
2. Production of oil sands is projected to grow rapidly from 1.32 MM BPSD in 2007 to 2.3 MM BPSD in 2015-2017 with 3.7 MM BPSD achieved in 2030.
3. The world demand for heavy fuel oil is forecast to remain relatively constant while demand for bunker fuel, which comprised one-third of the 10 MM B/D fuel oil market in 2005, could increase by about one-third by 2015 due to continued growth in world trade. U.S. consumption of residual fuel oil will decrease 1.0%/yr from 0.92 MM B/D in 2005 to 0.82 MM B/D in 2020 but increase slightly, 0.1%/yr, to 0.83 MM B/D in 2030. Global marine bunker fuel oil sulfur limits are scheduled to decrease from 4.5% in 2008 to 0.5% in either 2020 or 2025.
4. The world demand for middle distillates (jet fuel, kerosene and diesel fuels) is forecast to grow 2%/yr from 1,548 MM mt/yr in 2007 to 1,893 MM mt/yr in 2017.
5. Worldwide demand for new hydrocracking capacity is projected to increase through 2015 by 60% of the 2005 capacity as a result of faster growth of middle distillates than the growth of gasoline.
6. Bitumen contains less saturated compounds and more resins and asphaltenes than conventional crude oils.
7. Hydrocracking chemistry is similar to thermal and fluid catalytic cracking combined simultaneously and sequentially with hydrogenation and heteroatom removal. The thermal conversion of resid and heavy oils to lighter products is significant. Key heavy oil hydrocracking reactions in the network are reactions of the asphaltenes, multiple ring aromatics and naphthenes.
8. The major advantage of hydrocracking heavy oils is relatively high conversion to lower sulfur products and flexibility in the catalysts and product slate. Polycyclic aromatics that fluid catalytic cracking does not crack are hydrogenated and cracked.
9. Our economic evaluation showed the battery limits investment (BLI) cost estimate for a 108,310 BPSD bitumen VR ebullating bed hydrocracker with integrated hydrotreating of additional bitumen naphtha, AGO and VGO to be $1,029 million. The BLI for a 55,000 BPSD AR hydrocracker with integrated hydrotreating (no additional feed) is $279 million. Both plants are assumed located on the U.S. Gulf Coast.
10. Our estimated before tax return on investment (ROI) of 43% and 94% respectively for the VR and AR processes both show excellent profitability. The spread between the value of the feedstock and SCO product was the greatest factor affecting ROI.

3 SUMMARY

Worldwide, the production of conventional heavy crude oils is projected to grow relative to lighter crude oils. The importance of hydrocracking residue oils is growing along with the supply of heavy crude oils in order to produce low sulfur, improved quality middle distillates and lower sulfur residue feedstocks for fluid catalytic cracking (FCC), resid FCC (RFCC) or for heavy fuel oil. Upgrading bitumen into synthetic crude oil (SCO) is of great current and future interest due to forecasts that demand will outpace conventional crude oil supply growth coupled with increasing demand for low sulfur distillate and residual fuels. Canadian oil sands production is projected to grow very rapidly. Pipeline expansions and connection to a Pacific seaport will extend SCO marketing area to include more refineries in the U.S. as well as exports overseas.

This PEP Report provides an overview of heavy oil hydrocracking developments in chemistry, catalysts, process and hardware technology since PEP Report 228, Refinery Residue Upgrading, issued in 2000. We proceed to develop process economics for two bitumen upgrading processes that both integrate hydrocracking with hydrotreating of the hydrocracked gas oil and lighter products to produce SCO. The first process hydrocracks vacuum residue (VR) in ebullated bed reactors without oil recycle. Bitumen derived naphtha and gas oils from the crude unit are also charged to the single stage hydrotreating section of this plant. The second process hydrocracks atmospheric residue (AR) in a slurry reactor with some residue oil recycle and employs two-stage hydrotreating. In both processes, conventional fixed bed hydrotreating reactors are used.

The economics of hydrocracking vacuum residue using a generic, two-stage fixed bed reactor process producing middle distillates (57.4 vol%) and naphtha (25.9 vol%) are developed in PEP Report 228. PEP Report 214A, Heavy Oil Hydrotreating, (2007) develops the economics for a generic hydrotreating unit processing AR. PEP Report 266, Heavy Oil from Tar Sands, (2008) reviews the technology and develops the economics of Canadian bitumen production.

COMMERCIAL ASPECTS

Synthetic crude oil (SCO) is commonly a blend of naphtha, distillate and gas oil range petroleum fractions boiling below the residue fraction (1050°F+, 565°C+). Canadian oil sands production is projected to grow very rapidly, reaching 2.3 million B/D in 2015 from 1.32 million B/D in 2007 according to one forecast or more than doubling by 2017 to 3.23 million B/D by another forecast. Currently SCO imports are mostly refined in the U.S. Midwest and Mountain states. Expected pipeline expansions will increase the availability of SCO to refineries in the Mountain states, supply the Pacific region and even Texas. A proposed pipeline connection to a Pacific seaport will expand the SCO marketing region to include exports to China and Japan.

Worldwide, the importance of hydrocracking heavy oils to middle distillates, and combined with hydrotreating, bitumen to SCO is increasing due to:

- Refining of more heavy crude oils and oil sands bitumen,
- Increasing demand for ultra low sulfur vehicle fuels,
- Growing regulatory requirements for low sulfur marine and stationary boiler fuels,
- Increasing recognition of the benefits of removing catalyst poisons such as sulfur from feedstocks for downstream processes.

Hydrocracking reduces the high levels of sulfur, nitrogen and oxygen that are concentrated in the heavier distillation fractions of heavy crude oils and bitumen. World demand for middle distillate based products (jet fuel, kerosene and diesel fuels) is forecast to grow 2.0%/yr from 2007 through 2017. Although the world demand for residual fuels is projected to remain relatively constant, the demand for bunker fuel could increase by one-third between 2005 and 2015 due to the growth in world trade. Global allowable bunker fuel oil sulfur limits will decrease from 4.5% in 2008 to 3.5% by 2012 and then to 0.5% in either 2020 or 2025.

We summarize the specifications for the main refined products containing hydrocracked oil: diesel fuels, distillate fuel oils, jet fuel, gas turbine fuel oils and kerosene.

Of the world's 655 refineries, 25.5% have hydrocracking capacity and 18 or 2.7% appear to have a residue or heavy oil hydrocracker. The residue units are mostly located in the Asia-Pacific region (6), North America (5) and Western Europe (4). Worldwide residue hydrocracking capacity averages 31,900 B/cD. New hydrocrackers, under construction or planned, include two heavy oil or residue hydrocrackers. A 100,000 B/D residue hydrocracker under construction in Fort Saskatchawan, Canada, Shell Canada is scheduled to start-up in 2010. Sonhoe plans a 110,000 B/D heavy oil hydrocracker for Teeside, U.K. to start-up in 2013-2014.

The main catalytic metals in hydrocracking catalysts are molybdenum, nickel and cobalt. Catalysts account for about 11% of the cobalt market. Just about 7% of U.S. molybdenum consumption in 2004 and 2005 is estimated to have been used for catalysts. Molybdenum is primarily produced as a byproduct of copper refining while cobalt is a byproduct of nickel refining. Since the costs of producing these metals from primary mines are much greater than the by-product production costs, the prices of these metals historically have been cyclic and volatile. Since about 2004, the prices of molybdenum and nickel have risen rapidly while cobalt declined through 2005.

TECHNICAL ASPECTS

Heavy oil hydrocracker feedstocks are typically vacuum or atmospheric residua (plus varying, usually small, amounts of refinery heavy waste oil streams). Although similar to hydrocracking gas oils, these heavy feedstocks are more difficult to process and require knowledge of the oil's composition and adjustments to the process conditions. The heavy oils are complex; higher boiling oils containing significant asphaltenes and heteroatoms. The physical and chemical nature of the feedstock not only determines the yield and quality of the products but also it's processing. The objective is to minimize coking while converting the asphaltenes and high molecular weight polar compounds into lower molecular weight products. In addition, product asphaltenes must be stable, i.e. they do not separate from the lighter oil. Furthermore, thermal cracking is important in hydrocracking of heavy oil.

The performance of a hydrocracking process depends upon the nature and concentration of the heteroatoms (sulfur, nitrogen, oxygen and metals) present in the feedstock, the product

specifications, the catalyst properties (activity, selectivity and rate of deactivation), reactor design and operating conditions.

We review the properties of Canadian crude oils and bitumens as well as their residues. We briefly summarize analytical techniques applied to characterizing heavy oils before discussing the composition of the residues.

Compared to other Canadian heavy oils, the bitumens contain less saturated compounds (16-17% compared to 23-30%), more resins (37% vs. 29-33%) and more asphaltenes (18-21% vs. 10-16%). A conventional Alberta crude oil contains still higher amounts of saturated compounds (53%) and therefore considerably lower concentrations of resins (19%) and asphaltenes (3%). Heavy crude oils, bitumen and their residue oils contain significantly higher amounts of sulfur and nitrogen compounds than conventional heavy crude oils. Most of the nitrogen resides in heterocyclic organonitrogen compounds. Metal (nickel and vanadium) content is comparable to these conventional heavy crude oils.

The chemistry of resid and bitumen upgrading is extremely complex due in part to the complexity of the feedstocks and the number of thermal and catalytic reactions occurring. Except for aromatic saturation, the major reactions are generally thermodynamically favorable at typical operating conditions. Key reactions in the network for heavy oils are the reactions of the asphaltenes, multiple ring aromatics, naphthenes, paraffins and nitrogen and sulfur containing heterocyclics. Selective ring opening improves the cetane number of the diesel fuel fraction.

In the reactor, H_2S formed earlier can react with certain light hydrocarbons to form mercaptans. This mercaptan recombination reaction can occur at high temperature within the reactor, in the effluent piping or in downstream equipment. Heavy residue feedstocks can also form high molecular weight soft coke-like substances, called sediments, which cause many downstream operational problems such as blocking valves, pumps and even hot or cold separators.

Considerable progress has been made in modeling the hydrocracking kinetics. In addition to lumped species models, models are now based on continuous mixtures, structure oriented lumping and single event models. However, these models are still dependent upon feedstock properties and require some experimental data for the particular feedstock.

The principal task of the catalyst is to suppress coke formation through hydrogenation by metals such as molybdenum, nickel, iron and cobalt. The hydrocracking catalyst is a bifunctional catalyst containing metallic sites and acidic sites. The metal sites catalyze hydrogenation, hydrogenolysis and isomerization. Hydrogenation function (at low sulfur conditions) increases in the order: Ni/Mo < Ni/W < Pt/Pd. The acidic sites catalyze dehydrogenation, cracking, isomerization and dealkylation reactions. Support acidity increases in the order: alumina < halogenated alumina < silica-aluminas < zeolites. Phosphorus is added to promote hydrodenitrogenation activity.

Understanding the interaction of many factors is necessary to control the reaction pathways in developing commercial catalysts that achieve today's refiner's goals. The major catalyst properties include the acid and metal functions and the substrate porosity. Process considerations include the reactor flow scheme, hydrotreating severity, hydrocracking severity, temperature, pressure and hydrogen availability. The goal is to stop reactions at the desired products and prevent further cracking that often results in forming low value light ends and reduced liquid yield. Control of the sequence is accomplished by selection of catalyst properties such as strength and distribution of acid sites and tailoring the metal hydrogen activity to balance the acidity. Elimination of diffusion restraints with heavy oils is achieved by control of substrate pore size and pore geometry of the catalyst.

Since the hydrocracking is net exothermic, temperature control and heat removal is a key process consideration. Types of hydrocracking reactors are: up or down flow fixed beds, ebullating bed or slurry reactors. Hydrocracking processes are classified by the type of reactor and the type of flow configuration. Process types are once-through, single stage, two-stage, separate or integrated hydrotreating, or reverse-flow. The separate hydrotreating type employs separate hydrogen gas recycle loops. The reverse-flow type achieves partial conversion in a treating stage; unconverted oil is then converted with fresh hydrogen in a separate reactor.

We briefly describe hydrocracking processes, mainly commercial but some developmental, that have been applied to heavy oil feedstocks.

Operating conditions in general depend upon the properties of the feedstock, hydrocracking and catalysts system. Hydrocracking heavy oils may require hydrogen pressures of the order of 1500-2000 psi or even higher at temperatures in the range of 700-800°F (370-425°C) and long residence times of 2-4 hours. Design considerations are briefly discussed mainly for reactors and separators.

Since molecular hydrogen is a relatively expensive source of hydrogen for hydrocracking compared to possible alternatives, incorporating the water-gas synthesis reaction ($CO + H_2O = CO_2 + H_2$) into the hydrocracking process is of research interest. Under supercritical conditions, this reaction is an effective source of hydrogen for slurry hydrocracking residual oils. Laboratory results with dispersed catalysts are similar to those obtained with molecular hydrogen. Other research and development activity in hydrocracking catalysts that we briefly discuss concerns carbon substrates, pillared clays, cobalt saponite, NiMoTi zeolite and limonite catalysts.

ECONOMIC ASPECTS

In this report, we develop the process economics for hydrocracking two heavy oil feedstocks, vacuum residue (VR) and atmospheric residue (AR), both derived from bitumen. The VR is hydrocracked a two train ebullated bed reactor process; the AR in a single train slurry reactor process. Both processes integrate hydrocracking with hydrotreating to produce a low sulfur synthetic crude oil (SCO) product.

Unit feedstock capacity of the VR plant is 108,310 BPSD of VR equal to 97,479 BPCD at 0.90 operating factor. Bitumen derived straight run naphtha (196 BPSD), atmospheric gas oil (31,299 PBSD) and vacuum gas oil (60,135 BPSD) from the crude unit are charged to the integrated hydrotreater along with hydrocracker effluent. Unit feedstock capacity of the AR plant is 55,000 BPSD equal to 49,500 BPCD at 0.90 operating factor. No additional feedstock is processed in this plant. Table 3.1 summarizes the economic results for each process.

The battery limit investment (BLI) is $1,029 million or 9,500 $/BPSD for the base case 108,310 BPSD VR unit. The BLI of the hydrocracking section only, $801 million or 7,400 $/BPSD, compares favorably with a published estimate of $782 million or 7,220 $/B for a LC-Fining vacuum residue hydrocracker when adjusted for capacity and conversion level.

Our BLI cost estimate for our concept of the AR fed Kobe slurry type process is $ 279 million for a U.S. Gulf Coast location. Our total fixed cost of $381 million is about 20% lower than a reported estimate of $473 million for a Northern Alberta location when adjusted for inflation since mid-2004. Increased labor and transportation charges at the Canadian site may be contributing to the difference. The extent of off-site costs in reported estimate is unspecified; our storage tankage is minimal. Our designs are not optimized for capital or operating costs.

The product value of each process depends highly upon the spread between the feedstock and product value. By-products are small by design to maximize the main product. Raw material costs are by far the largest cost area.

The ROI of the VR ebullated bed process is 43%. The ROI of the AR slurry process is 94%. Both these ROI's are historically high due to the state of the refining markets in mid-2007 resulting in large spreads between residue feedstock and SCO product values.

Table 3.1
SUMMARY OF COST ESTIMATES FOR HYDROCRACKING VR AND AR

	VR Hydrocracker	**AR Hydrocracker**
Type Process	Ebullated bed	Slurry reactor
Feedstock	Bitumen VR	Bitumen AR
Capacity[a], BPSD	108,310 VR,	55,000 AR
Hydrocracker Reactor Pressure, psig	2,780	1,450
Hydrotreater Reactor Pressure, psig	2,620	1,385
Capital Investment, $ millions		
Battery Limits Investment (BLI)	1,029,200	279,290
Off-sites	347,500	101,258
Total Fixed Capital (TFC)[b]	1,376,700	380,548
Production Costs, ¢/lb residue feed		
Raw Materials	20.00	17.79
By-product Credits	-0.84	-1.33
Utilities	0.93	0.28
Total Labor[c]	0.17	0.21
TOTAL DIRECT OPERATING COSTS, ¢/lb	20.42	17.11
Indirect Costs[d]	1.24	1.24
NET PRODUCTION COST, ¢/lb	21.66	18.35
Pretax ROI, ¢/lb (%/yr)	3.05 (42.7)	6.36 (94.0)
Synthetic Crude Oil Product Value, ¢/lb	24.71	24.71

[a] At 0.90 on stream factor.

[b] Total Fixed Capital includes a 15% contingency for the VR case and a 25% contingency for the AR process, utilities and tankage investments and allowances for general services facilities and for general waste treatment.

[c] Includes operating labor, control laboratory workers and maintenance labor. The number of operators is 4 per shift for the VR case and 8 for the AR case.

[d] Includes plant overhead, taxes and insurance, depreciation at 10%/y of TFC, general & administrative, sales and research expenses.

4 INDUSTRY STATUS

The key attribute of the hydrocracking of residual feedstocks is flexibility—flexibility in the feedstocks cracked, in the catalyst used, and in the products made. The residue hydrocracker's role in the fuels refinery (Figure 4.1) is two-fold: to crack and to hydrogenate heavy oils. Hydrocracking of residual oils mainly increases the production of low sulfur middle distillates and reduces the volume of residual fuel oil. Feed to the residue hydrocracker is mainly atmospheric residue (about 80% of worldwide capacity, 16% vacuum residue and 4% deasphalted oil in 1998 [221B157]) plus, in some refineries, fluid catalytic cracking (FCC) slurry oil, resid FCC (RFCC) slurry oil, coker heavy gas oil or deasphalted oil are also charged. Recent interest is the upgrading of bitumen by hydrocracking either vacuum or atmospheric residual oil combined with hydrotreating the hydrocracked products to produce synthetic crude oil (SCO). Since SCO is low in sulfur and most does not contain residue oil (975°F+, 524°C+) [211B304], SCO is valued as a premium crude oil.

Figure 4.1
REFINERY RESIDUE HYDROCRACKING

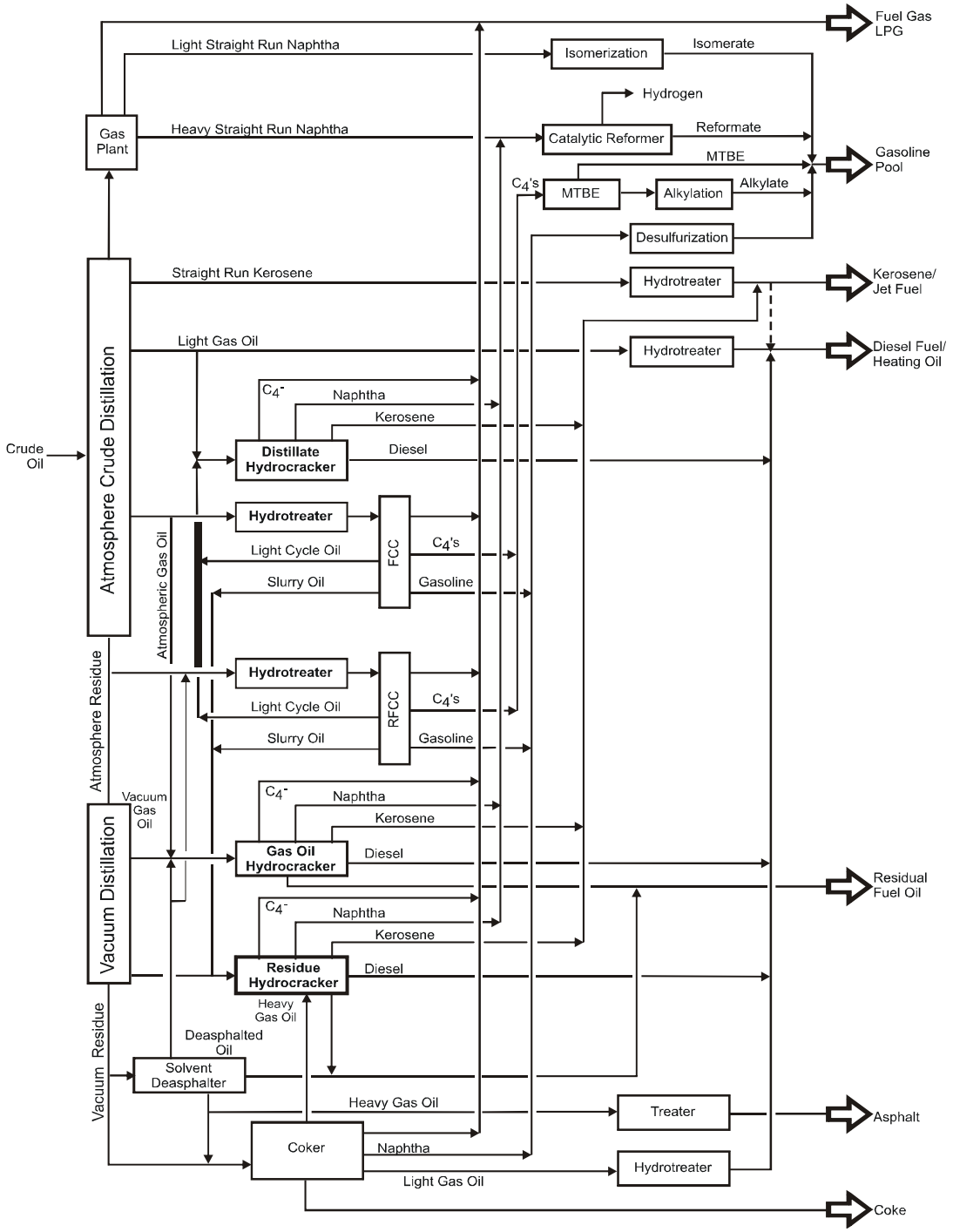

Other processes that convert heavy oils to lighter products are RFCC and coking, mainly delayed coking. RFCC mainly produces gasoline blending stock, propylene and butylenes and LPG. Coking can process the heaviest feedstocks into intermediate naphtha and gas oils that require further processing before blending into gasoline, diesel fuel and fuel oils. Because the value of fuel coke is usually low, the yields of coker liquids are maximized and the production of coke minimized. The residue hydrocracker can process feedstocks having a higher carbon residue and heteroatoms content than RFCC feedstocks, but not as heavy as a coker can handle.

Hydrocracking residual oils can produce premium low-sulfur middle distillates for blending into jet fuel and diesel fuel. Hydrogenation increases the degree of saturation of these products; for example, imparting to the hydrocracked diesel component a high cetane number, whereas the light cycle oil from catalytic cracking has a low cetane index. The presence of H_2 also reduces the concentration of polycyclic aromatic compounds, minimizing the buildup of coke on the catalyst. H_2 in the hydrocracker removes sulfur, nitrogen, and metals as it does in a hydrotreater, producing a low-sulfur heavy fuel oil. Hydrocracked gas oil and residual oil are good FCC feedstocks.

Residue hydrocracking is an increasingly attractive conversion process. Worldwide production of heavy and extra heavy crude oils is increasing relative to lighter crude oils while the demand for heavy fuel oil is projected to grow very little. Demand for diesel fuels and jet fuel is forecast to increase faster than the demand for gasoline. As a result of this middle distillate demand and increased bitumen upgrading, worldwide demand for new hydrocracking capacity is forecast to increase through 2015 by 60% of the 2005 capacity [211B168].

PROCESSING BITUMEN

Heavy crude oils and bitumen contain high amounts of sulfur, nitrogen, carbon residue and metals that concentrate in the heavy gas oil and residue fractions. These contaminants must be removed to meet new heavy fuel oil specifications and to protect down stream refining catalysts. Since the composition of bitumen (Table 4.1) and its level of contaminants are fundamentally different than conventional petroleum crude oils, additional refining is required to convert bitumen into transportation fuels and fuel oils. Besides high sulfur and metals, bitumen also has a high total acid number. Primary bitumen upgrading processes are coking, residue hydrocracking, solvent deasphalting and their combinations. Hydrocracking increases the gravity and reduces the 650°F+ (343°C+) residue oil. Secondary processes are VGO hydrocracking to further improve the SCO gravity and hydrotreating of the diesel cut [211B196].

Table 4.1
TYPICAL BITUMEN FROM THERMAL PRODUCTION

	Whole Bitumen	Distillate	VGO	Vacuum Residue	Synthetic Crude Oil Target
BPSD	100,000	12,000	34,000	54,000	Maximum
API gravity	9	26	16	1	~39
Nitrogen, ppm	4,000	1,460	2,000	6,400	1,000 (VGO)
Cetane No.		32			45 (Distillate)
650°F+ (343°C+)	88				~35

Source: 211B196

SYNTHETIC CRUDE OIL

Synthetic crude oil is generally understood to be a blend of naphtha, distillate and gasoil range petroleum fractions boiling below the residue fraction (1050°F+, 565°C+). Currently most of the synthetic crude imports to the United States from production in Western Canada is refined in the U.S. Midwest and Mountain regions. Pipeline expansions will increase imports the Mountain region and supply the Pacific region. Expected future pipeline systems will reach Texas [211B322]. Connection to a seaport in British Columbia could allow shipments to California and the Asia-Pacific region [211B307, 211B317]. Pipeline transportation of Canadian tar sands is discussed in PEP Report 266, *Heavy Oil from Tar Sands,* (2008).

Each synthetic crude and bitumen blend has a different composition and refining characteristics. Sweet blends comprise the majority of marketed synthetic crudes; the major ones are briefly described:

Suncor Oil Sands Blend	Light, sweet Syncrude
Syncrude Sweet Blend	Fully hydrotreated, fluid coker upgraded oil
Husky Sweet Blend	Sweet, ebullated bed hydroprocessed and delayed coker oils
Premium Albian Synthetic	Ebullated bed hydroprocessed oils

Suncor makes a range of sour blends customized for specific refinery processing capabilities. For example, their OSE crude is a blend of hydrotreated coker naphtha with non-hydrotreated coker distillate and coker heavy gas oil. OSV crude is a blend of hydrotreated coker naphtha with straight run distillate and straight run vacuum gas oil. Albian Heavy Synthetic is a blend of Premium Albian Synthetic crude with residue containing unconverted oil from the resid hydrocracker.

Greater than 400,000 B/D of bitumen is shipped diluted without upgrading. In addition to the syncrudes, several bitumen blends are marketed. *Dilbits* are blends of 70-75 LV% of bitumen and mostly C_5-C_{12} condensate that are processed in heavy crude refineries. The most common dilbits are Cold Lake Blend, Bow River and various Lloyd blends. *Synbits* are blends of sweet synthetic crudes (typically 50 LV%) and bitumen (50 LV%). They contain significant proportions of distillate range oil and are refined in medium crude refineries. The most common synbits are Christina Lake Blend and MacKay Heavy. *SynDilBits* are blends of condensate, hydrotreated synthetic crude and bitumen (typically about 65 LV%) that are also refined in medium crude refineries. Most common examples are Wabasca Heavy and Western Canadian Select (WCS). WCS may become the new market heavy crude. WCS is a proprietary blend developed by EnCana, Talisman, Canadian Natural Resources Limited and Petro-Canada. Each batch contains condensate, hydrotreated synthetic crude (Suncor Oil Sands Blend), heavy conventional crude, medium conventional crude, Cold Lake bitumen and Athabasca bitumen meeting the following specifications: 19-22 API, 7-9 wt% carbon residue, 2.8-3.2 wt% sulfur and a total acid number of 0.7-1.0 mg KOH/g.

Dilbits and WCS contain about three times the volume of resid than West Texas Intermediate crude oil and about 50% more vacuum gas oil but only half the distillate and naphtha [211B307]. Refinery constraints and modifications required to process Dilbits, Synbits and synthetic crude oil are summarized in Table 4.2. As pipeline system expansions (mentioned above) are built, potentially wide price differentials will provide an incentive for the refineries served to make modifications to process syncrude and bitumen blends [211B317].

Table 4.2
REFINERY CONSTRAINTS AND MODIFICATIONS FOR OIL SANDS CRUDE PROCESSING

Oil Sands Product	Constraint[a]	Modification
Dilbit	% resid	Larger cokers, ancilliaries
	% sulfur	More HDS, recovery[b]
	Total Acid Number[c]	Metallurgy
	Asphalt[d]	Blending
Synbit	% Vacuum Gas Oil	Larger FCC, ancillaries
	% Sulfur	More HDS, recovery[b]
	Total Acid Number[c]	Metallurgy
	Asphalt[d]	Blending
Synthetic Crude Oil	% Vacuum Gas Oil	Hydrocracking
	% Distillate	Hydrocracking
	Diesel aromatics	Aromatics saturation

Source: 211B317

[a] Refinery constraints may also include product blending and environmental emissions.

[b] Refineries must reduce the sulfur content of gasoline and diesel.

[c] High total acid number (TAN) for Athabasca, not Cold Lake.

[d] Asphalt from mined bitumen may be poor quality. Synbit asphalt quality is uncertain.

CRUDE OIL SUPPLY

Worldwide crude oil supply will continue well past 2030 to be produced predominantly from conventional oil and gas (as condensate) fields. Unconventional crude oil supplies, defined as any liquid hydrocarbon fuel, including liquids produced from energy crops, natural gas, coal, oil sands, and shale oil, will increase from 3.3 volume % (vol%) in 2005 to 6.9% in 2015 and to 9.3% in 2030. Synthetic crude oil produced from oil sands bitumen will be of increasing supply to U.S. refiners. Supplies of crude oil and synthetic crude oil are briefly discussed next.

Conventional Crude Oil Supply

Worldwide conventional crude oil supply is projected by the Energy Information Administration to increase from 81.59 million B/D in 2005 to 90.9 million B/D in 2015 and 106.4 million B/D in 2030. This is an annual growth rate of 1.1% from 2005 to 2015 and also 1.1% from 2015 to 2030. Production in North America is forecast to vary about the 2004-2005 average production of 14.2 million B/D as shown in Table 4.3 [211B150].

Table 4.3
WORLD CRUDE OIL SUPPLY BY REGION

MILLION B/D

	Actual		Forecast					Annual Growth, %		
	2004	2005	2010	2015	2020	2025	2030	2005-2015	2015-2030	2005-2030
Conventional crude oil[a]										
North America	14.43	13.93	14.06	14.47	14.45	14.29	14.26	-0.35	-0.10	0.09
Europe	6.39	5.96	5.73	4.91	4.22	3.64	3.16	-0.69	-2.90	-2.51
Asia-Pacific	8.32	8.14	7.59	7.41	7.60	7.63	7.50	-0.22	0.08	-0.33
South & Central America	6.68	6.78	7.30	7.86	8.16	8.49	9.04	0.15	0.94	1.16
Former Soviet Union	11.48	11.99	13.96	15.21	16.20	17.22	18.10	0.44	1.16	1.66
Middle East	24.28	24.63	24.23	26.23	29.00	32.42	36.10	0.14	2.15	1.54
Africa	9.42	10.15	12.55	14.77	15.72	16.90	18.24	0.75	1.42	2.37
World	81.00	81.59	85.42	90.86	95.35	100.59	106.40	0.07	1.06	1.07
World, Unconventional Production[b]	2.44	2.80	5.63	6.78	7.83	9.42	10.93	1.39	3.23	5.60
World, Total	83.45	84.39	91.05	97.64	103.29	110.01	117.33	0.11	1.23	1.33

[a] Includes condensates, natural gas liquids, other hydrogen and hydrocarbons for refinery feedstocks, alcohol and other sources and refinery gains.

[b] Includes: liquids produced from energy crops, natural gas, coal, oil sands, and shale.

Source: 211B150

Synthetic Crude Supply

Major reserves of oil sands are located in Canada, Venezuela, Malagasy, Albania, Trinidad, Russia, Romania and the United States. Venezuela's Orinoco heavy oil belt and Alberta Canada's recoverable bitumen account for 3.6 trillion barrels of heavy oil and bitumen reserves. Canadian oil sands will be a major source of future crude oil supply in North America, projected to increase from 1 million bpd to 3 million bpd by 2015. Canadian companies are actively developing pipeline projects to transport western Canadian crude oil and bitumen products to the West Coast, which then allows exports to Western United States and Asian markets. A pipeline project in the U.S. could bring Canadian crude oil from Illinois to the Texas Gulf Coast [211B177, 211B196, 211B304, 211B322].

Canada's recoverable oil sands reserves are estimated to be 175 billion barrels, making Canada's petroleum reserves second largest only to Saudi Arabia's 259 billion barrels. While production from Canada's 4 billion barrels of conventional reserves is projected to remain relatively constant at 2.0 million B/D through 2017, oil sands production is projected to grow very rapidly, more than doubling by 2017 to 3.23 million B/D from 1.32 million B/D in 2007 [211B321]. Recent annual oil sands production has averaged 150,000 B/D. The U.S. Energy Information Administration forecasts oil sands production to grow slower, reaching 2.3 million B/D in 2015 and 3.7 million B/D in 2030. Another forecast is for world bitumen plus heavy oil production to increase from 1.7 million B/D in 2005 to 6.4 million B/D in 2030. Yet another forecast is for 23.6 million B/D of world energy demand to be met from unconventional oil or heavy oil by 2025

[211B150, 211B306, 211B317, 211B325]. Planned refining projects to process Canadian heavy oil blends are forecast to increase refining capacity by 1.1 million B/D by 2015 [211B322].

PEP Report 266, *Heavy Oil from Tar Sands*, (2008) reviews in detail Canadian tar sands reserves, production capacity growth, upgrader capacity expectations and pipeline proposals. Business risks, costs of tar sands production and industry profitability are discussed.

RESIDUAL OIL MARKET

Residual oil is sold as residual fuel oil or blended with suitable distillate oil to meet fuel oil viscosity specifications for marine vessels, power plants, commercial buildings and industrial furnaces (as discussed in PEP Report 214A). In the United States, total sales of residual fuel oil (in units of 1,000 B/D) declined and recovered with the economy during this period:

2000	2001	2002	2003	2004	2005
911.0	881.2	699.6	772.1	867.1	920.0

Residual fuel oil sells for less than the cost of crude oil due to its high sulfur content and the presence of heavy metals. Sulfur in the crude oil is concentrated in the residual oil distillation cut. Residual oil naturally contains 1 to over 6% sulfur. Residual oil may also contain high concentrations of heavy metals, mainly nickel and vanadium, which upon combustion produce ash that can foul burner systems.

Worldwide overall demand for heavy fuel oil is projected to remain relatively constant (Figure 4.2). In 2005, about one-third of the 10 million B/D fuel oil market was bunker fuel oil. The inland demand for fuel oil is projected to continue to decline. Due to continued growth in world trade, especially driven by economic growth in China, the demand for bunker fuel could increase by about one-third between 2005 and 2015 [211B151]. As briefly discussed in the Product Specifications subsection, global sulfur limits for bunker fuel oil will decrease from 4.5% in 2008 to 3.5% by 2012 and then to 0.5% in either 2020 or 2025.

Figure 4.2
WORLD DEMAND FOR RESIDUAL FUEL OIL [211B305]

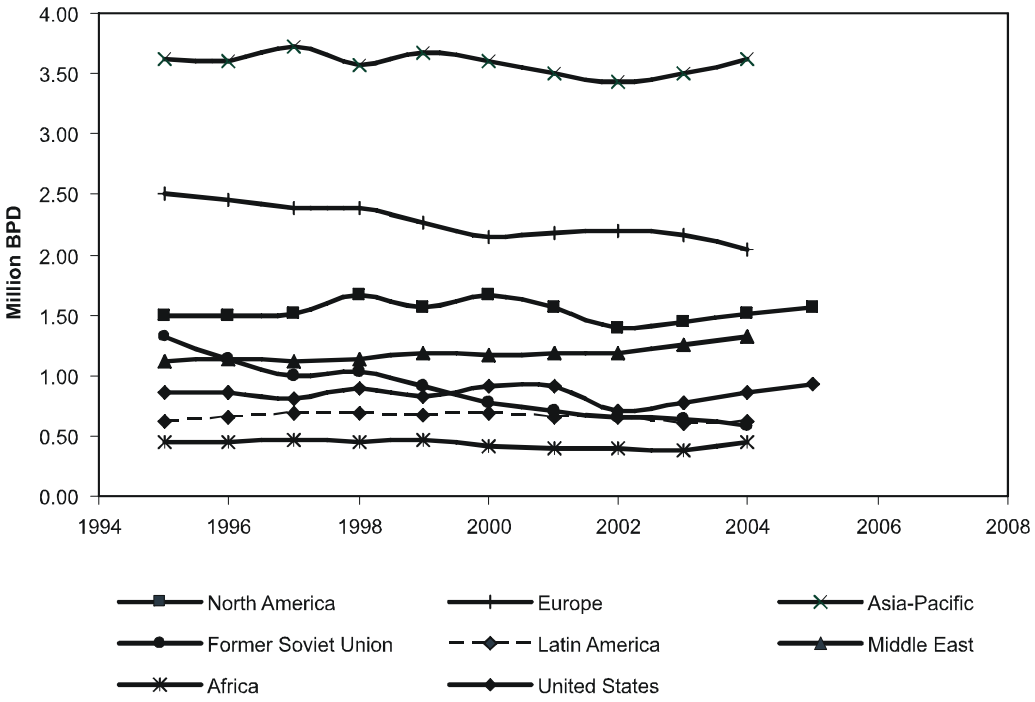

U.S. residual fuel oil consumption is projected by the Energy Information Administration under their most likely crude oil price scenario (reference case) to decrease from 0.92 million B/D in 2005 to 0.82 million B/D in 2020 but increase to 0.83 million B/D in 2030 (Table 4.4). This is an annual growth rate of -1.0%/y from 2005 to 2020, 0.12%/y from 2020 to 2030 and 0.41%/y from 2005 to 2030.

Table 4.4
FORECAST U.S. RESIDUAL FUEL OIL PRICE AND CONSUMPTION

	Actual		Forecast					Annual Growth, %		
	2004	2005	2010	2015	2020	2025	2030	2005-2020	2020-2030	2005-2030
Crude Oil Price[a], $/B										
High Price Estimate			62.53		82.60		92.93			
Reference Price Estimate	37.09	49.19	51.20	44.61	46.47	49.57	51.63			
Low Price Estimate			44.06		28.91		28.91			
Residual Fuel Oil Price, $/B										
High Price Estimate			55.99		77.41		86.02			
Reference Price Estimate	32.05	41.41	47.84	41.16	43.97	47.00	48.97			
Low Price Estimate			41.12		26.50		27.64			
Residual Fuel Oil Consumption, million B/D										
Under High Price			0.78		0.73		0.76	-1.09	0.40	-0.76
Under Reference Price		0.92	0.79		0.82		0.83	-1.01	0.12	-0.41
Under Low Price			0.81		1.06		1.16	-0.85	0.91	0.93

[a] Weighted average price delivered to U.S. refineries.

Source: 211B150

MIDDLE DISTILLATE MARKETS

Middle distillate is the collective term applied to petroleum distillation fractions boiling above naphtha (gasoline) and below the residue oil. Middle distillates products are marketed as kerosene, jet fuel, diesel fuels and distillate grade fuel oils. Unlike fluid catalytic cracking or coking, the hydrocracking process produces saturated hydrocarbons in the middle distillate boiling range. Saturated compounds produce high cetane index diesel fuels; however, residual oil feedstocks, especially obtained from bitumen contain heavy aromatics, which lower the cetane value if not cracked or saturated during or after hydrocracking.

Product Demand

Middle distillates are used to produce jet fuel, kerosene, highway and off-highway diesel fuels and distillate fuel oils (grades No. 1 through No. 5). In the United States, end uses of middle distillates from 2000 to 2005 declined for fuel oil uses and jet fuel but increased for on-highway and off-highway diesel fuels (Figure 4.3). The increased diesel fuel demand caused U.S. total middle distillate demand to increase (Figure 4.4).

Figure 4.3
DISTRIBUTION U.S. SALES OF MIDDLE DISTILLATE FUEL OILS BY END USE, % [211B326]

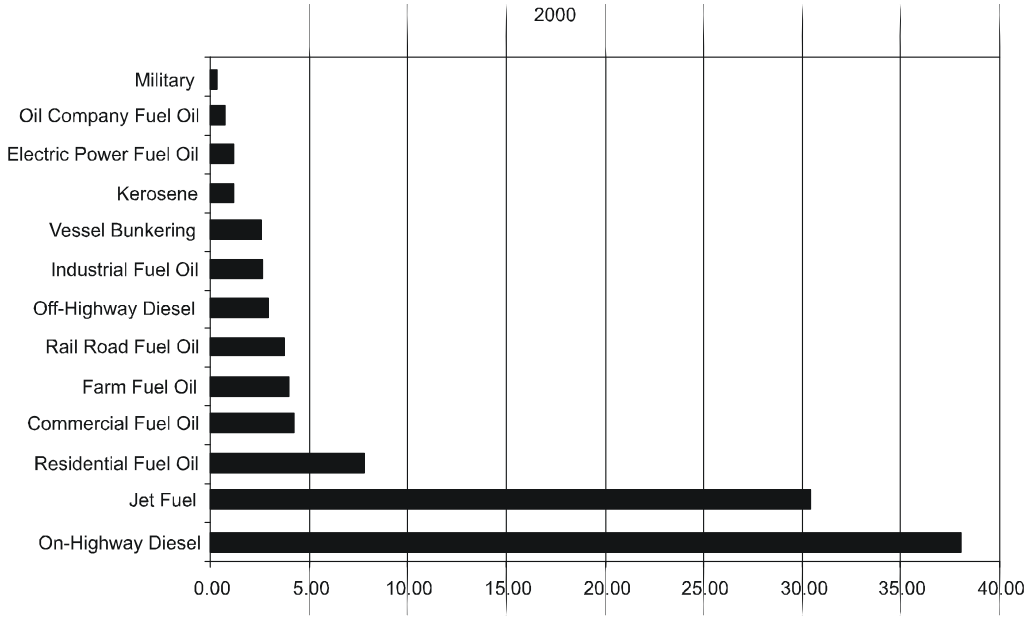

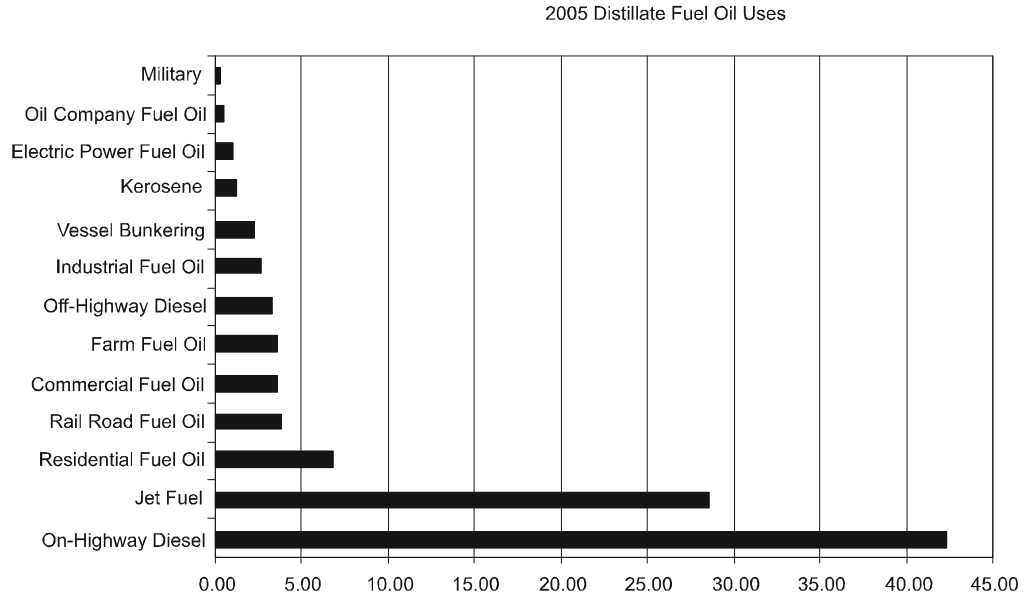

Figure 4.4
U.S. MIDDLE DISTILLATE SALES [211B326]

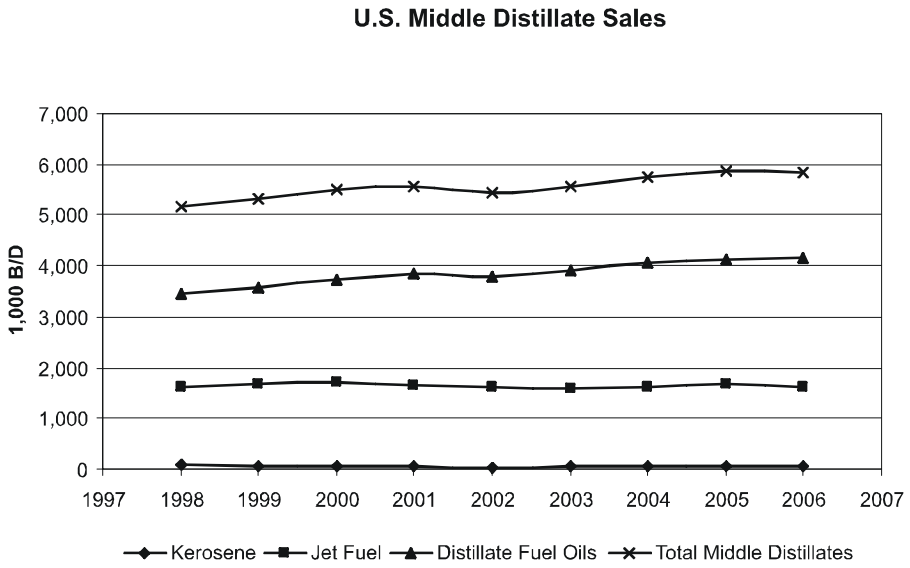

In Western Europe, the popularity of diesel powered vehicles relative to gasoline engines increased over the last decade due to tax policy and improved performance engines. In 2005, 50% of new cars sold in Europe were diesel fueled. As a result, gasoline demand over the decade to 2006 decreased by 0.5 million B/D while diesel fuel demand increased by 1.0 million B/D. Over the same period, the ratio of gasoline to diesel demand decreased from 1.3 to 0.7. The demand for heavy fuel oils also declined over this period by approximately 0.5 million B/D while overall crude oil refined by 0.9 million B/D. These trends are projected by the International Energy Agency to continue for several more years [211B159, 211B162].

World demand for middle distillate based products (jet fuel, kerosene and diesel fuels) totaled 1,549 MM mt in 2007, an increase of 3.1%/y from 2002 to 2007 (Table 4.5). The largest demand was in Asia-Pacific (477 MM mt/y), Western Europe (350 MM mt/y) and North America (346 MM mt/y), which combined account for 75.7% of the market. Growth was highest in Central & Eastern Europe, 4.7%/y, followed by South & Central America, 4.0%/y and Asia-Pacific, 3.8%/y.

Diesel fuels (including on-road and off-road diesel fuel, middle distillate heating fuels and petrochemical feedstocks) comprise 78.2% of the overall world middle distillate products (2007). The forecast (Table 4.5) shows this percentage will be 78.3% in 2012 and 78.4% in 2017. Jet fuel is 15.9% of the overall world middle distillate products and will slowly increase to 16.1% in 2012 and 16.2% in 2017. The remaining 5.9% of the middle distillate products is kerosene, which will slowly decrease over the next ten years to 5.6% in 2012 and 5.5% in 2017.

Except in North America (and Western Europe from 2007 to 2012), the projected regional growth rates of jet fuel from 2007 to 2017 are greater than the growth rates of diesel fuels. The forecast growth rates of kerosene vary more by region when compared to rates for diesel fuel or jet fuel.

Table 4.5
WORLD DEMAND FOR MIDDLE DISTILLATES

(1,000 M TON/Y)

			Forecast		Growth Rate, %/y		
	2002	2007	2012	2017	2002-2007	2007-2012	2012-2017
Western Europe							
Jet Fuel	45,866	52,295	56,166	62,022	2.7	1.4	2.0
Kerosene	5,989	10,693	11,877	13,130	12.3	2.1	2.0
Diesel Fuel (Gas Oil)	260,082	287,151	312,804	337,828	2.0	1.7	1.6
Total	311,937	350,139	380,847	412,980	2.3	1.7	1.6
Central & Eastern Europe							
Jet Fuel	1,229	1,693	2,017	2,723	6.6	3.6	6.2
Kerosene	117	124	158	199	1.1	5.0	4.7
Diesel Fuel (Gas Oil)	24,669	32,901	38,310	42,641	5.9	3.1	2.2
Total	26,015	34,718	40,485	45,563	5.9	3.1	2.4
Asia-Pacific							
Jet Fuel	44,076	57,262	69,510	82,890	5.4	4.0	3.6
Kerosene	59,758	56,524	58,998	62,987	-1.1	0.9	1.3
Diesel Fuel (Gas Oil)	291,348	363,499	414,699	472,184	4.5	2.7	2.6
Total	395,182	477,285	543,207	618,061	3.8	2.6	2.6
South & Central America							
Jet Fuel	8,030	9,651	11,400	13,253	3.7	3.4	3.1
Kerosene	2,416	1,890	2,046	2,265	-4.8	1.6	2.1
Diesel Fuel (Gas Oil)	72,411	89,091	99,729	110,954	4.2	2.3	2.2
Total	82,857	100,635	113,175	126,472	4.0	2.4	2.2
Commonwealth of Independent States							
Jet Fuel	10,901	14,218	16,161	17,169	5.5	2.6	1.2
Kerosene	383	504	528	553	5.6	0.9	0.9
Diesel Fuel (Gas Oil)	37,068	43,942	45,929	47,811	3.5	0.9	0.8
Total	48,352	58,664	62,618	65,533	3.9	1.3	0.9
Middle East							
Jet Fuel	11,225	14,697	17,245	19,322	5.5	3.2	2.3
Kerosene	9,876	10,536	11,341	12,177	1.3	1.5	1.4
Diesel Fuel (Gas Oil)	74,982	89,446	98,814	106,964	3.6	2.0	1.6
Total	96,083	114,679	127,400	138,463	3.6	2.1	1.7
Africa							
Jet Fuel	7,142	8,513	10,164	11,314	3.6	3.6	2.2
Kerosene	5,757	5,165	5,858	6,633	-2.1	2.5	2.5
Diesel Fuel (Gas Oil)	42,917	52,838	60,175	66,729	4.2	2.6	2.1
Total	55,816	66,516	76,197	84,676	3.6	2.8	2.1
North America							
Jet Fuel	83,099	87,983	92,489	97,101	1.1	1.0	1.0
Kerosene	3,768	5,224	5,506	5,830	6.8	1.1	1.1
Diesel Fuel (Gas Oil)	225,900	253,060	270,509	298,772	2.3	1.3	2.0
Total	312,767	346,267	368,828	401,703	2.1	1.3	1.7
World							
Jet Fuel	211,568	246,312	275,151	305,792	3.1	2.2	2.1
Kerosene	88,064	90,660	96,312	103,775	0.6	1.2	1.5
Diesel Fuel (Gas Oil)	1,029,377	1,211,927	1,340,970	1,483,883	3.3	2.0	2.0
Total	1,329,009	1,548,899	1,712,433	1,893,450	3.1	2.0	2.0

Price Trends

Diesel fuel prices in Europe, Asia and the United States behaved similarly, peaking from August through September or October 2005 and forming a plateau from April through August 2006 through mid 2006 before temporarily declining through the end of 2006 (Figure 4.6). Prices then rapidly rose more than 50% at least through early 2008.

Figure 4.5
HISTORICAL U.S. FUEL OIL PRICE

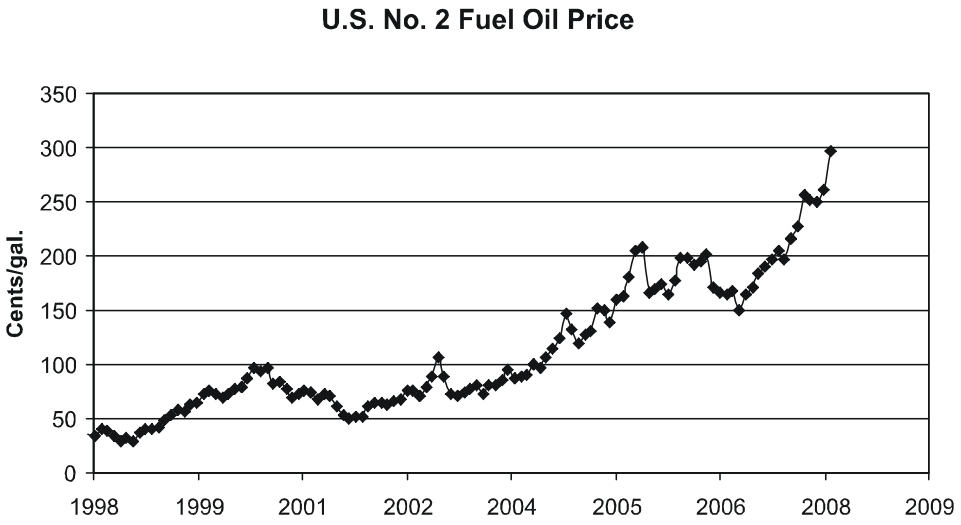

Figure 4.6
EUROPEAN, ASIAN AND U.S. DIESEL FUEL PRICES

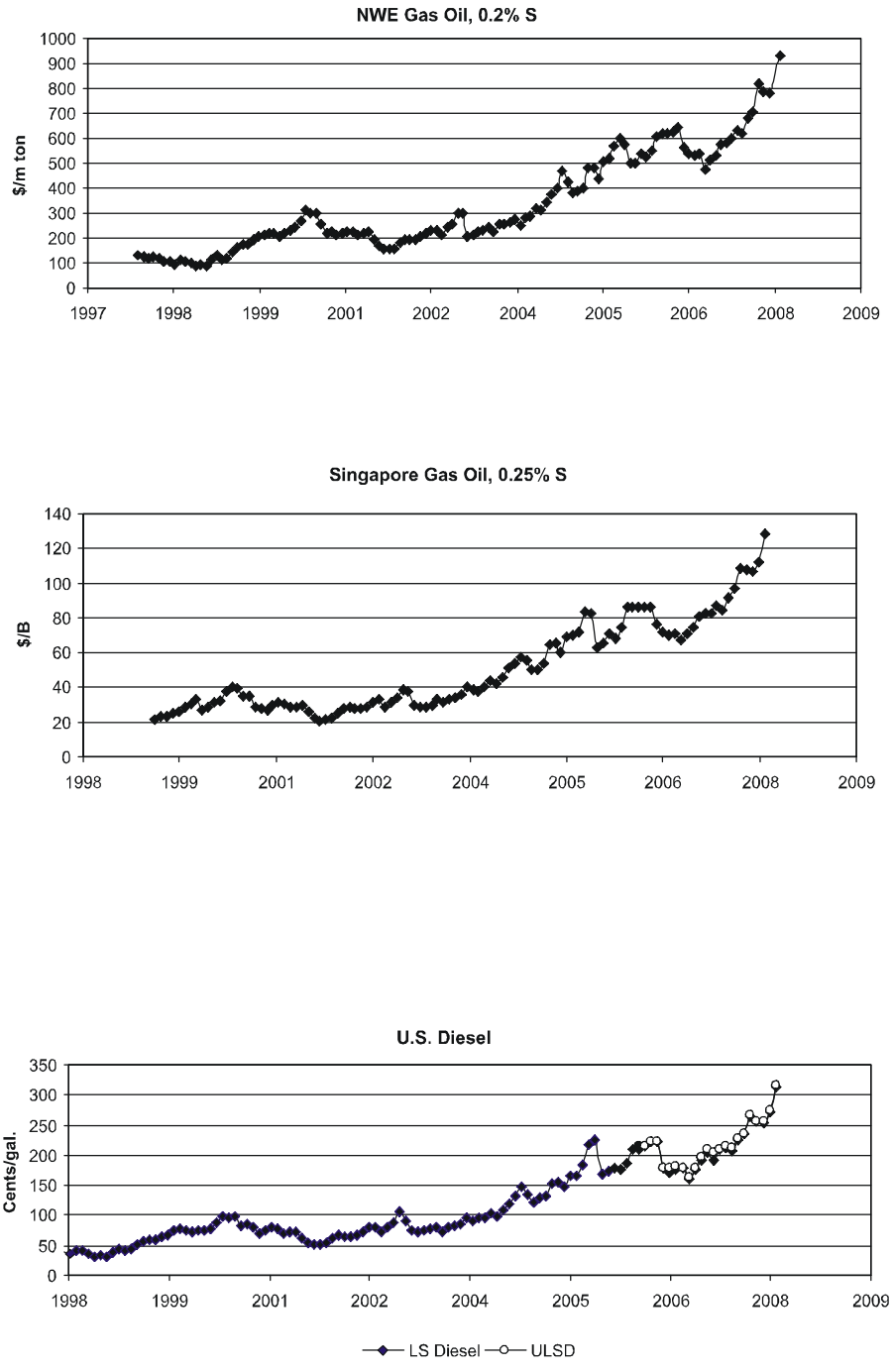

PRODUCT SPECIFICATIONS

In this subsection, we briefly discuss the basic specifications of diesel fuels. We then summarize the main specifications for distillate fuel oils, gas turbine fuel oils, jet fuel and kerosene. These middle distillate products have requirements such as distillation range similar to diesel fuel.

Diesel Fuels

Specifications for diesel fuels and diesel engine emissions are established by each country or in Europe, by the European Commission (the European Union specifications). In the United States, the ASTM International (formerly American Society for Testing and Materials) specifications are the basis of the fuel specifications. The ASTM specifications gain legal authority only when officially adopted by the relevant governmental authorities. In Japan, the Japanese Industrial Standard JIS K 2204 sets the quality of diesel fuels. These three sets of specifications are also used extensively in the Asia-Pacific and other regions. For instance, Brazilian standards are primarily the European specifications. Australia and Singapore standards are a mixture of the three [211B156]. Future regulations are expected to tighten, especially in urban areas and in the developing countries. Sulfur is the first diesel fuel specification to be tightened, reduced (from 5,000 ppm to 15 ppm). Minimum cetane number or cetane index values are expected to increase in some locations such as the U.S. Total aromatics are also being reduced. For example, total aromatics are 5 vol% for Sweden's MK-1 diesel fuel produced for the Swedish market. European Union's diesel fuel polycyclic aromatic content is limited to 11 vol%. If not directly specified, aromatics are likely to be reduced to meet higher minimum cetane value requirement [211B158].

There are numerous grades of diesel fuels in the U.S. depending upon location, application and organizations such as pipeline companies and contract customers. Some specifications such as cloud point and pour point, depend upon the time of year. California regulations now require all diesel fuels to contain a maximum of 15 ppm sulfur. In the rest of the U.S., the transition from the previous 5,000 ppm sulfur specification to 15 ppm ultra low sulfur diesel (ULSD) continues (Table 4.6). Temporarily the grades of highway diesel fuels expand from three to seven since three levels of sulfur are specified (Table 4.7). Four grades of special marine diesel fuels are also specified. Specifications for biodiesel fuels are discussed in PEP Report 251A, *Advances in Biodiesel and Renewable Diesel Production*, (2007). In addition to normal diesel fuels, premium diesel fuel grades are specially formulated by a number of suppliers to have properties beyond the minimum ASTM 975 specifications.

Table 4.6
ULSD FUEL IMPLEMENTATION SCHEDULE

Highway ULSD (15 ppm sulfur)		
U.S. Refiners and Importers	80%	June 1, 2006
	100%	June 1, 2010
Retail Outlets	100%	December 1, 2010
Retailers may choose to sell low sulfur (500 ppm) fuel until December 1, 2010.		
Non-Road ULSD (15 ppm sulfur)		
Large Refineries & Importers	Non-road	2010
Large Refineries & Importers	Locomotive & Marine	2012
Small Refineries	Non-road and Locomotive & Marine	2014

Sources: 211B153, 211B154

Table 4.7
DIESEL FUEL GRADES

Grade	Application	Maximum Sulfur
Highway Diesel		
No. 1-D S15	Special-purpose, light middle distillate fuel for use in diesel engines with frequent and widely varying speeds and loads or for abnormally low operating temperatures. Volatility than is higher than provided by No.2-D fuels.	15 ppm
No. 1-D S500		500 ppm
No. 1-D S5000		5000 ppm
No. 2-D S15	General-purpose, middle distillate fuel for use in diesel engines, especially those with relatively high loads and uniform speeds, or in engines not requiring fuels having higher volatility or other properties specified in Grade No. 1-D fuels.	15 ppm
No. 2-D S500		500 ppm
No. 2-D S5000		5000 ppm
No. 4-D	A heavy distillate fuel, or a blend of distillate and residual oil, for low- and medium-speed diesel engines in applications involving predominantly constant speed and load.	
Marine Diesel		
DMX	A special light distillate intended for emergency engines. Primarily used in marine engines of less than 5 l per cylinder.	
DMA (or MGO)	A general purpose marine distillate that must be free from traces of residual fuel.	
DMB	"Marine diesel oil" is allowed to have traces of residual fuel, which can be high in sulfur. This contamination usually occurs during distribution when the same pipelines, supply vessels, … are used for residual fuel. DMB is typically used for 5-30 l per cylinder and larger engines.	
DMC	May contain residual fuel, and is often a residual fuel blend. Similar to No. 4-D and can be used in 5-30 l per cylinder and larger engines.	

Source: 211B152

Low sulfur highway diesel (LSD) fuel, which is limited to 500 ppm (0.05 wt%) sulfur, became effective in the U.S. in October 1993. This limit was set to facilitate sulfate emission reduction for heavy duty highway engines in order to meet 1994 emission standards. Ultra low sulfur diesel (ULSD) fuel, limited to only 15 ppm sulfur, was introduced in June 2006 with full implementation by December 1, 2010. ULSD fuel enables catalytic-based emission control technology such as diesel particulate filters and NO_x adsorbers. These devices are considered necessary to meet the 2007-2010 emission standards for heavy duty engines as well as Tier 2 standards for light duty engines [211B152].

Besides sulfur content, diesel fuels must meet specifications on many other properties. Table 4.8 summarizes diesel fuel properties and their effect on engine performance. The basic

requirements of ASTM D 975 for diesel fuels No. 1-D, No. 2-D and No. 4-D are summarized in Table 4.9. Diesel fuel must meet all additional requirements such as those imposed by pipelines and contract customers. The specifications of the European Union are similar, but not identical to those of ASTM International. For example, the minimum cetane number is higher and a density range specification is added. The automotive diesel fuel standards developed by the European Standards Organization introduced in 2005 are shown in Table 4.10.

Table 4.8
RELATIONSHIP OF DIESEL FUEL PROPERTIES TO COMPOSITION AND PERFORMANCE PROPERTY

Property	Property Type[a]	Effect of Property on Performance	Time Frame of Effect
Flash Point	Minor	Safety in handling and use – not directly related to engine performance	---
Water and Sediment	Minor	Affect fuel filters and injectors	Long-term
Volatility	Bulk	Affects ease of starting and smoke	Immediate and Long-term
Ash	Minor	Can damage fuel injection system and cause combustion chamber deposits	Long-term
Sulfur	Minor	Affects particulate emissions, cylinder wear and deposits	Particulates: Immediate Wear: Long-term
Copper Strip Corrosion	Minor	Indicates potential for corrosive attack on metal parts	Long-term
Cetane Number	Bulk	Measure of ignition quality – affects cold starting, smoke, combustion and emissions	Immediate
Cloud Point and Pour Point	Minor	Affect low-temperature operability and fuel handling	Immediate
Carbon Residue	Minor	Measures coking tendency of fuel; may relate to engine deposits	Long-term
Heating Value (Energy Content)	Bulk	Affects fuel economy	Immediate
Density	Bulk	Affects heating value	Immediate
Stability	Minor	Indicates potential to form insoluble particles and gum/residues in the fuel during use and/or in storage	Immediate and Long-term
Lubricity	Minor	Affects fuel injection system (pump and injector) wear	Moderate: Long-term Severe: Short-term
Water Separability	Minor	Affects ability of water to separate from fuel	Immediate and Long-term
Low-Temperature Operability	Bulk	Affects flow and filterability at cold ambient temperatures	Immediate

[a] A bulk property is one that is determined by the composition of the fuel as a whole. A minor property is one that is determined by the presence or absence of minor components.

Source: 211B156

Table 4.9
ASTM D 975 AND CARB REQUIREMENTS FOR DIESEL FUEL OILS

Property	ASTM Test Method	S15, S500. S5000[a] No. 1-D	S15, S500. S5000[a] No. 2-D	No. 4-D	CARB[b] Vehicle S15
Flash Point, °F (°C), min.	D 93	100 (38)	125 (52)	130 (55)	125 (52)
Water and Sediment, vol%, max.	D 2709 D 1796	0.05	0.05	--- 0.50	0.05
Distillation Temperature, °F (°C), 90 vol% recovered, min./max.	D 86	---/ 550 (288)	540 (282)/ 640 (338)		540 (282)/ 640 (338)
Or Simulated Distillation[c], °F (°C), 90 vol% recovered, min./max.	D 2887		572 (300)/ 673 (356)		
Kinematic Viscosity, mm^2/sec at 104°F (40°C), min./max.	D 445	1.3/2.4	1.9/4.1	5.5/24.0	1.9/4.1
Ash, % mass, max.	D 482	0.01	0.01	0.10	0.01
Sulfur, ppm (µg/g), max.	D 5453	15	15	---	15
% mass, max.	D 2622	0.05	0.05	---	0.0015
% mass, max.	D 129	0.50	0.50	2.00	
Copper Strip Corrosion Rating after 3 hours at 122°F (50°C), max.	D 130	No. 3	No. 3	---	No. 3
Cetane Number, min	D 613	40	40	30	
Must meet one of:					40
(1) Cetane Index, min.	D 976-80	40	40	---	
(2) Aromaticity, vol%, max.	D 1319	35	35	---	
Cloud Point, °F (°C), max.	D 2500	Varies	Varies	---	Varies
Ramsbottom Carbon Residue (% mass on 10% distillation residue), max.	D 524	0.15	0.35	---	0.35
Lubricity, 140°F (60°C), WSD, microns, max.	D 6079	520	520	---	
Appearance at 70°F (21°C)	D 4176				Bright and Clear
API Gravity, min.	D 1298 or D 4052				30[d]
Thermal Stability, 90 minutes, % Reflectance, min.	D 6468				80[d]
Pour Point, °F (°C), max.	D 97				Varies[d]

Source: 211B155, 211B156

[a] The fuel grades S15, S500 and S5000 refer to the maximum sulfur content allowed in the fuel expressed in ppm by weight (e.g., S15 refers to diesel fuel with a maximum sulfur content of 15 ppm).

[b] California Air Resources Board -- one company's product specifications.

[c] Does not apply to No. 1-D S5000 or No. 2-D S15.

[d] Company or pipeline specification.

Table 4.10
EUROPEAN AUTOMOTIVE DIESEL FUEL SPECIFICATIONS (EN 590)

Diesel Specification Parameter	Units	Limits	Test Method
Cetane Number		51.0 minimum	EN ISO 5156
Cetane Index		46.0 minimum	EN ISO 4264
Density at 59°F (15°C)	kg/m^3	820 minimum to 845 maximum	EN ISO 3675 EN ISO 12185
Polycyclic Aromatic Hydrocarbons	% (m/m)	11 maximum	EN 12916
Sulfur content	mg/kg	50.0 maximum 10.0 maximum	EN ISO 20846 EN ISO 20847 EN ISO 20884
Flash Point	°F (°C)	>131 (>55)	EN ISO 2719
Carbon Residue (on 10% distillation residue)	% (m/m)	0.30 maximum	EN ISO 10370
Ash Content	mg/kg	0.01 maximum	EN ISO 6245
Water Content	mg/kg	200 maximun	EN ISO 12937
Total Contamination	mg/kg	24 maximum	EN 12662
Copper Strip Corrosion (3 hours at 122°F, 50°C)		Class 1	EN ISO 2160
Oxidation Stability	g/m^3	25 maximum	EN ISO 12205
Lubricity, WSD at 140°F (60°C)	µm	460 maximum	EN ISO 12156-1
Viscosity at 104°F (40°C)	mm^2/sec	2.00 minimum to 4.50 maximum	EN ISO 3104
Distillation			
Vol. Recovered at:			
482°F (250°C)	% (v/v)	<65	EN ISO 3405
662°F (350°C)	% (v/v)	85 minimum	
95% Point	°F (°C)	360 maximum	
Fatty Acid Methyl Esters (FAME) Content	% v/v	5 maximum	EN 14078

Source: 211B156

Premium Diesel Fuel

Under certain circumstances, some fuel users believe they can benefit from diesel fuel with properties modified beyond the minimum ASTM 975 specifications. These modified fuels are often called premium diesel fuel, although other names are also used. Typically, multiple fuel properties are modified to create premium diesel fuels. Some of the more commonly modified properties are: cetane number, low-temperature operability, stability, lubricity, detergency and heating value. Specific properties are tailored to meet various performance demands in different marketing regions. The level of improvement in each property usually varies from supplier to supplier and may also vary from region to region. Meaningful standards for premium diesel fuel have been proposed by several organizations (National Conference on Weights and Measures, the Engine Manufacturers' Association and the Alliance for Automobile Manufacturers). The most widely supported is the proposal of the National Conference on Weights and Measures (NCWM), which sets specifications for cetane number, low-temperature operability, thermal stability and lubricity (Table 4.11).

Table 4.11
NCWM PREMIUM DIESEL PROPERTY REQUIREMENTS

Fuel Property	Test Method	NCWM Premium Diesel Recommendation
Cetane Number, min.	ASTM D 613	47.0
Low-Temperature Operability	ASTM D 2500 or ASTM 4539	ASTM D 975 Tenth percentile minimum ambient air temperature
Thermal Stability, 180 minutes 302°F (150°C), % Reflectance, min.	ASTM D 6468	80%
Lubricity, 140F (60C), WSD, microns, max	ASTM D 6079	520[a]

Source: 211B156

[a] ASTM D 975 adopted the same lubricity requirement starting January 2005. Currently the NCWM lubricity requirement states that if a single test result is more than 560 microns, a second test shall be conducted. The average of the two values can not be greater than 560 microns.

Premium diesel fuel can be made at the refinery by special processing and blending or at the terminal by the addition of additives. In practice, most premium diesel fuels are produced at the terminals [211B156].

Diesel Fuel Additives

Fuel marketers are legally required to supply fuel that meets all applicable specifications. Reputable suppliers also ensure that non-specified properties such as stability and low-temperature operability are suitable for the intended use. The properties of diesel fuel can be met by the refiner to provide a high quality product through the choice of crude oils, refinery processing, refinery blending or the use of additives. Additive use is driven by economics and fixed refinery factors. The only legal required diesel fuel additive in the U.S. is red dye in some high-sulfur and tax-exempt fuels. Other diesel fuel additives can be classified by use: to improve engine and fuel delivery system performance, fuel handling, fuel stability or contamination control (Table 4.12).

Table 4.12
TYPES OF DIESEL FUEL ADDITIVES

Additive Type	Comments
Engine and Fuel Delivery System Performance	
Cetane Number Improvers	Raise the cetane number to reduce combustion noise and smoke and improve starting in cold climates. Magnitude of benefit varies among engine designs and operating modes from no effect to readily perceived improvement. Octyl Nitrate (2-ethylhexyl nitrate) is most widely used. Di-tertiary butyl peroxide is also commercially used.
Injector Cleanliness	Ashless polymeric detergent additives are composed of a polar group that bonds to deposits and precursors and a non-polar group that dissolves in the fuel. Deposits can be dissolved as well as prevented. Dosage is usually in the range of 50 to 300 ppm.
Lubricity	These additives contain a polar group attracted to metal surfaces that causes a thin film of the additive that acts to lubricate the boundary when two surfaces contact. Mono acids, amides and esters are commonly used. Mono acids are used in the 10 to 50 ppm range while amides and esters require 50 to 250 ppm.
Smoke Suppressants	Some organometallic compounds act as combustion catalysts, reducing the black smoke emissions, most significantly in older technology engines that are significant smoke producers. Additives based on iron, cerium or platinum are still used in some locations, where the benefits of emission reduction may outweigh potential health concerns. Use of metallic fuel additives is not allowed in the U.S, Japan and certain other countries.
Fuel Handling	
Antifoam	Some diesel fuels tend to foam on pumping into vehicle tanks. Most antifoam additives are organosilicone compounds typically used at concentrations of 10 ppm or lower.
De-Icing	Alcohols/glycols preferentially dissolve in free water, lowering the freezing point and minimizing ice crystal formation that can plug fuel lines or filters.
Low-Temperature Operability	Most of these additives are polymers that interact with wax crystals that form in the fuel when cooled below the cloud point. The polymers mitigate the effect of the crystals on fuel flow by modifying their size, shape and/or degree of agglomeration. The interaction of a particular polymer is fairly specific; a particular additive will not perform equally well in all fuels and the proper additive must be experimentally determined. The additive must be blended into the fuel before any wax crystals form.
Conductivity	Anti-static additives are added to prevent static electric charge accumulation in naturally low conductivity fuels, typically lower-sulfur fuels. Both metallic (banned by the U.S. EPA) and non-metallic additives are available and used at 10 ppm or less.
Drag Reducing	Pipelines sometimes add drag reducing additives to increase the volume of product they can deliver. These are high molecular weight polymers that change the turbulent flow characteristics to increase the maximum flow rate from 20 to 40%. When the additives pass through a pump, they are sheared into smaller molecules that have minimal effect on product performance in engines at normal operating temperatures.

Table 4.12 (Concluded)
TYPES OF DIESEL FUEL ADDITIVES

Additive Type	Comments
Fuel Stability	
Antioxidants	Oxidation of reactive compounds by oxygen in a small amount of air dissolved in the fuel starts complex chain reactions. Hindered phenols and certain amines (such as phenylenediamine) are the most commonly used antioxidants, typically at 10 to 80 ppm.
Stabilizers	Stabilizers prevent acid-base reactions in the fuel. Stabilizers are typically strongly basic amines used at 50 to 150 ppm. They react with weakly acidic compounds to form products that remain dissolved in the fuel and do not react further.
Metal Deactivators	Metal deactivators chelate trace amounts of certain dissolved metals, especially copper and iron, that catalyze reactions that cause fuel instability. Typical concentrations range from 1 to 15 ppm.
Dispersants	Dispersant does not prevent fuel instability reactions, but disperses the particulates that form, preventing agglomeration to particles large enough to plug fuel filters or injectors. Dispersant may be included in multi-component fuel stabilizer packages. Typical concentration in the fuel ranges from 15 to 100 ppm.
Contaminant Control	
Biocides	Although high temperatures during processing effectively sterilize diesel fuel, microorganisms such as bacteria, yeasts and molds from the air or water can quickly contaminate the fuel. Since most microorganisms need free water, biogrowth is usually concentrated at the water-fuel interface. When the colony has time to grow large, it will have produced enough acidic byproducts to accelerate tank corrosion or enough biomass to plug filters. Prevention by keeping the water, especially in static storage tanks, as low as possible, preferably none is the best approach to microorganism control. Biocides can be used when microorganisms become a problem. Biocides soluble in both the oil and water phases attack biogrowth in both phases. Biocide concentration typically ranges from 200 to 600 ppm. Biocide may not work if a heavy biofilm has accumulated on the surface of the tank, preventing the biocide from contacting organisms deep in the tank. Draining and mechanical cleaning is then required. Regardless, biomass may need to be removed to avoid clogging filters. Any water containing biocide is toxic and must be handled appropriately.
Demulsifiers	When fuel contains polar compounds that act as surfactants and free water is present, a fuel-water emulsion can form. High shear forces such as pumping the fuel can stabilize the emulsion. Demulsifiers are surfactants that break up the emulsion and allow the fuel and water to separate. Concentrations are typically 5 to 30 ppm.
Corrosion Inhibitors	Corrosion inhibitors form a protective barrier on metal surfaces that prevents attacks from corrosive agents. Rust particles can plug filters and increase wear of pumps and injectors. Concentrations range from 5 to 15 ppm.

Source: 211B156

When pipelined, diesel fuel additives must be added at the terminal to avoid contamination of other products, especially jet fuel. Otherwise, additives may be added at the refinery, at the terminal or in the after market by the purchaser (Table 4.13).

Table 4.13
COMMON DIESEL FUEL ADDITIVE TYPES AND PREDOMINANT BLEND LOCATIONS

	Refinery	Use Local Pipeline/Terminal	Aftermarket[a]
Cetane Improvers	X	X	X
Cold Flow Improver	X	X	X
Conductivity Improver		X	
Corrosion Inhibitors	X	X	X
Diesel Detergents		X	X
Deicers		X	X
Stabilizers/Dispersants	X	X	X
Lubricity Improvers		X	X
Covert Marker Dyes		X	X
Demulsifiers & Dehazers		X	X
Metal Deactivators	X		

Source: 211B166

[a] Includes fleet, distributors, Jobbers and end users.

Additives are frequently provided in special blends of several additives, called additive packages. An additive package may contain additives to improve: detergency-dispersion, lubricity, stability, cetane number, low-temperature operability (flow or pour point reducer) and conductivity. A biocide and a corrosion inhibitor are also included. Since many additives must be tailored to the specific fuel, each refiner or marketer is likely to use a different additive package and different treatment rates at different locations since the needs of the market vary with location.

The U.S. EPA issued in 2001 its Final Ruling on the "…Highway Diesel Sulfur Control Requirements" for heavy duty highway engines manufactured during and after model year 2007. The Final Ruling limits the nitrous oxide (NO_x) and particulates matter exhaust emissions and established ULSD sulfur requirement of 15 ppm maximum. Initially the EPA proposed requiring all diesel fuel additives to also contain less than 15 ppm sulfur, but the Final Ruling allows the use of additives containing more than 15 ppm sulfur, provided their concentration in the diesel fuel is less than 1 vol%. However, "Additive manufacturers that market such additives and blenders that use them in highway diesel fuel will have additional requirements to ensure that the 15 ppm sulfur cap on highway diesel fuel is not exceeded." To reduce risk, in most situations, additives that meet the 15 ppm sulfur cap will be much preferred outside when added outside the refinery gate 211B166].

Refining required to make ULSD fuel alters the fuel composition and the additives used. Sulfur compounds, of course, are reduced as are oxygen and nitrogen compounds. This reduces the level of natural stabilizers, conductivity inhancers, lubricity agents and biological growth inhibitors. Wax precursors and the fuel's inherent solvency are altered by changing the ratio of saturates, aromatics and olefins. Achieving low temperature operability is more difficult due to higher crystallization onset temperatures, rapid wax precipitation rates and a greater amount of wax precipitated at a temperature relative to higher sulfur fuels. ULSD fuel without a conductivity improver additive is less conductive than high sulfur fuel. Removal of natural antioxidants destabilizes the fuel by allowing unrestricted formation of hydroperoxides that aid free radical polymerization and at concentrations greater than about 8 ppm can rapidly degrade elastomers of the fuel system [211B166].

We are not aware of any marketing statistics on diesel fuel additive usage. According to one publication, the most commonly used additive is lubricity additive, which is added all year long, at

the pipeline terminal. Severe hydrotreating to remove aromatics to meet low aromatics specification in some regions, such as California, also removes molecules providing boundary lubrication. As a result, some of low aromatics diesel fuels may require lubricity additives. Pour point reducers are widely used by refiners for wintertime and regions with colder ambient temperatures. (Pour point is usually controlled by processing changes in the U.S. because cloud point reducing additives are historically relatively ineffective.) Fuel stability additives are regularly added by some refiners and on an as need basis by others. Since ULSD fuel is more stable than higher sulfur fuel, ULSD significantly reduced the usage of stability enhancers. Cetane number improver is used by some refiners when economically advantageous. In California, the less than 10 wt% aromatics requirement can alternatively be met by formulations that provide equivalent emissions reduction. Many of these alternative formulations use cetane number improver to help achieve the required emissions reduction [211B156].

In Europe and Asia, antifoam additives are widely used to improve retail handling. North American fuels are inherently less foaming due to lower distillation end point, vehicle tank and dispenser designs and relatively few light-duty diesel vehicles, which tend to be more sensitive to foaming [211B156].

Distillate Fuel Oils

ASTM specifications for distillate fuel oils are listed in Table 4.14.

Table 4.14
ASTM D 396 – DETAILED REQUIREMENTS FOR FUEL OILS

Property	ASTM Test Methods	S500, S5000 No. 1	S500, S5000 No. 2
Flash Point, °F (°C), min.	D 93 – Proc. A	100 (38)	100 (38)
Water and Sediment, % vol., max.	D 2709	0.05	0.05
Distillation – one of the following requirements shall be met:			
1. Physical Distillation, °F (°C)	D 86		
10% volume recovered, max.		420 (215)	---
90% volume recovered, min.		---	540 (282)
90% volume recovered, max.		550 (288)	640 (338)
2. Simulated Distillation, °F (°C)	D 2887		
10% volume recovered, max.		380 (195)	---
90% volume recovered, min.		---	570 (300)
90% volume recovered, max.		580 (304)	670 (356)
Kinematic Viscosity, mm^2/s, at 104°F (40°C)	D 445		
min.		1.3	1.9
max.		2.1	3.4

Table 4.14 (Concluded)
ASTM D 396 – DETAILED REQUIREMENTS FOR FUEL OILS

Property	ASTM Test Methods	S500, S5000 No. 1	S500, S5000 No. 2
Ramsbottom Carbon Residue, max., (% mass on 10% Distillation Residue)	D 524	0.15	0.35
Sulfur, % mass, max.	D 2622	0.05	0.05
	D 129	0.50	0.50
Copper Strip Corrosion Rating, max., after 3 hours at 122°F (50°C)	D 130	No. 3	No. 3
Density at 59°F (15°C), kg/m^3	D 1298		
min.		---	---
max.		850	876
Pour Point, °F (°C), max.	D 97	0 (-18)	21 (-6)

Source: 211B156

Gas Turbine Fuel Oils

ASTM specifications for distillate gas turbine fuel oils at the time and place of custody transfer to user are listed in Table 4.15.

Table 4.15
ASTM D 2880 – DETAILED REQUIREMENTS FOR GAS TURBINE FUEL OILS

Property	ASTM Test Methods	No. 1-GT	No. 2-GT
Flash Point, °F (°C), min.	D 93	100 (38)	100 (38)
Distillation Temperature, °F (°C) 90 vol% Recovered,	D 86		
min.		---	540 (282)
max.		550 (28)	640 (338)
Ramsbottom Carbon Residue, max. (% mass on 10% Distillation Residue)	D 524	0.15	0.15
Kinematic Viscosity, mm^2/s, at 104°F (40°C)			
min.		1.3	1.9
max.		2.4	4.1
Water and Sediment, % vol., max.	D 2709	0.05	0.05
Ash, % mass, max.	D 482	0.01	0.01
Density at 59°F (15°C), kg/m^3, max.	D 1298	850	876
Pour Point, °F (°C), max.	D 97	0 (-18)	21 (-6)

Source: 211B156

Jet Fuel

ASTM specifications for jet fuels are listed in Table 4.16.

Table 4.16
ASTM D 1655 – DETAILED REQUIREMENTS OF AVIATION TURBINE FUEL

Property	ASTM Test Methods	Jet A or Jet A-1
Composition		
Acidity, total mg KOH/g, max.	D 3242	0.10
1. Aromatics, vol%, max.	D 1319	25
2. Aromatics, vol%, max.	D 6379	26.5
Sulfur, Mercaptan, mass %, max.	D 3227	0.003
Sulfur, total, mass %, max.	D 1266, D 2622, D 4294 or D 5453	0.30
Volatility		
Distillation – one of the following requirements shall be met:		
1. *Physical Distillation*	D 86	
Distillation Temperature, °F (°C)		
10% recovered, max.		401 (205)
50% recovered		Report
90% recovered		Report
Final Boiling Point, max.		572 (300)
Distillation Residue, % max.		1.5
Distillation Loss, % max.		1.5
2. Simulated Distillation	D 2887	
Distillation Temperature, °F (°C)		
10% recovered, max.		365 (185)
50% recovered		Report
90% recovered		Report
Final Boiling Point, max.		644 (340)
Flash Point, °F (°C), min.	D 56 or D 3828	100 (38)
Density at 59°F (15°C), kg/m^3	D 1298 or D 4052	775 to 840
Fluidity		
Freezing Point, °F (°C), max.	D 5972, D 7153, D 7154 or D 2386	-40 (-40) Jet A 53 (-47) Jet A-1
Viscosity at -4°F (-20°C), mm^2/s, max.	D 445	8.0
Combustion		
Net Heat of Combustion, MJ/kg, min.	D 4529, D3338 or D 4809	42.8
One of the following requirements shall be met:		
1. Smoke Point, mm or		
2. Smoke Point, mm and	D 1322	25
Naphthalenes, vol%, max.	D 1322	18
	D 1840	3.0
Corrosion		
Copper Strip, 2 hours at 212°F (100°C), max.	D 130	No. 1
Thermal Stability		
JFTOT -- 2.5 hours at control temperature of 500°F (260°C), min.	D 3241	
Filter Pressure Drop, mm Hg, max.		25
Tube deposits less than		3[a]
Contaminants		
Existent Gum, mg/100 mL, max.	D 381, IP 540	7
Microseparometer, Rating	D 3948	
Without Electrical Conductivity Additive, min.		85
With Electrical Conductivity Additive, min.		70
Additives		
Electrical Conductivity, pS/m	D 2624	Note[b]

Source: 211B156

[a] No peacock or abnormal color deposits.

[b] If an electrical conductivity additive is used, the conductivity shall not exceed 600 pS/m at the point of use of the fuel. When electrical conductivity additive is specified by the purchaser, the conductivity shall be 50 to 600 pS/m under the conditions at the point of delivery.

Kerosene

ASTM specifications for kerosene are listed in Table 4.17.

Table 4.17
ASTM D 3699 – DETAILED REQUIREMENTS FOR KEROSENE

Property	ASTM Test Methods	Limit
Flash Point, °F (°C), min.	D 56	100 (38)
Distillation – one of the following requirements shall be met:		
1. *Physical Distillation*		
Distillation Temperature, °F (°C)	D 86	
10% recovered, max.		401 (205)
Final Boiling Point, max.		572 (300)
2. *Simulated Distillation*	D 2887	
Distillation Temperature, °F (°C)		
10% recovered, max.		365 (185)
Final Boiling Point, max.		644 (340)
Kinematic Viscosity, mm^2/s, at 104°F (40°C)	D 445	
min.		1.3
max.		2.1
Sulfur, % mass	D 1266	
No. 1-K, max.		0.04
No. 2-K, max.		0.30
Mercaptan Sulfur, % mass, max.	D 3227	0.003
Copper Strip Corrosion Rating, max. 3 hours at 212°F (100°C)	D 130	No. 3
Freezing Point, °F (°C), max.	D 2386	-22 (-30)
Burning Quality, min.	D 187	Pass
Saybolt Color, min.	D 156	+16

Source: 211B156

Residual fuels

Historically residual fuel oil quality was regulated only for ship and crew safety and engine operability. Air emissions were effectively unregulated. Refiners traditionally disposed of high sulfur residual oil in marine bunker fuel oil.

International Marine Organization regulations ratified in October 2008 as Annex VI Amendments under the International Convention on the Reduction of Pollution from Ships (MARPOL) treaty effectively lower the sulfur limits for marine bunker fuel. Global allowable bunker fuel oil sulfur limits will decrease from 4.5% in 2008 to 3.5% by 2012 and then to 0.5% in either 2020 or 2025. The current average sulfur content is more than 2.5%; less than 5% of current bunker fuel meets the 0.5% sulfur level. Sulfur limits are much lower in Emission Control Areas (ECAs) where sulfur limits are equivalent to burning 1.5% fuel until 2010. After 2010, the ECAs limit is 1.0% sulfur until 0.1% sulfur becomes effective in 2015. Current ECAs are the Baltic Sea and North Sea-English Channel. The U.S. proposes California, the Pacific Coast and

possibly other areas become ECAs. Although the regulations provide a means for alternate methods to meet the emissions requirements such as scrubbing, formal approval of scrubbing technology (or its acceptance by ship owners and operators) has not occurred.

In the U.S., the California Air Resources Board (CARB) adopted a new marine engine emissions regulation of 0.1% sulfur fuel, applicable within 24 miles of the South Coast [211B324].

Marine air emissions of NO_x from large engines (as small as about 175 Hp) are also part of the Annex VI Amendments, but current focus is on engines and controlling NO_x emissions originating from atmospheric nitrogen during combustion. Nitrogen content may be regulated later [211B324].

The International Organization for Standardization (ISO) is also changing marine fuel quality regulations. They are in the process of adding sulfur grades and simplifying the viscosity regulation detail. Importantly, other aspects of fuel quality will be reevaluated. New limits on organic acid content (measured by the Total Acid Number, TAN) may affect the use of high TAN crude oils as convenient, low-priced feedstock for making low-sulfur marine fuel oils [211B324].

CATALYTIC METAL PRICES

The price history of the main hydroprocessing catalytic metals (Figures 4.7, 4.8 and 4.9) each showed different profiles over the last 10 years. Cobalt and molybdenum are byproducts. In 2005, byproduct molybdenum recovery from copper mining is estimated to account for 63% of worldwide supply. The price of byproduct metals are subject to greater fluctuations as production varies in response to demand for the primary metal. Catalysts account for about 11% of the cobalt market, as carbonate, sulfate, nitrate and acetate salts or metal. Just about 7% of U.S. molybdenum consumption in 2004 and 2005 is estimated to have been used for catalysts [211B144].

Figure 4.7
PRICE HISTORY OF MOLYBDENUM, 1997-2007 [211B143]

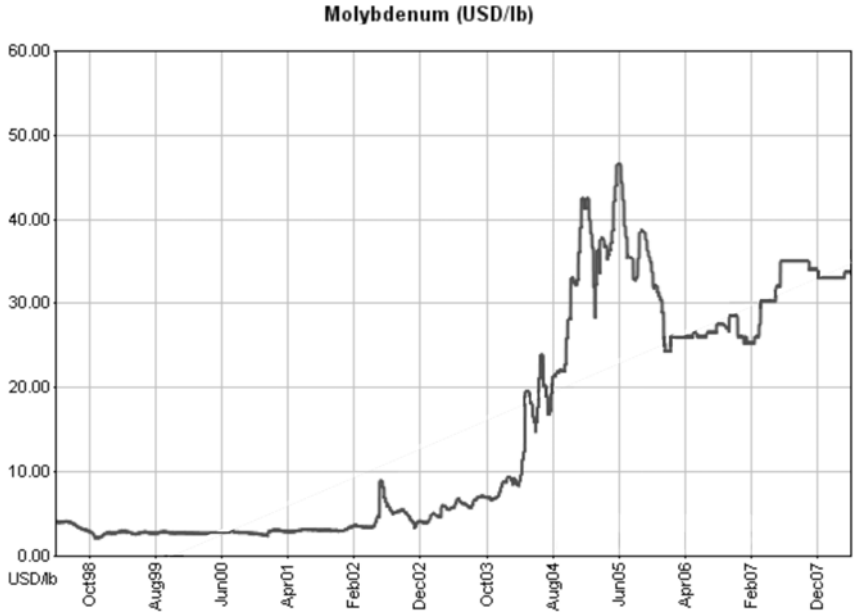

Figure 4.8
PRICE HISTORY OF NICKEL, 1997-2007 [211B142]

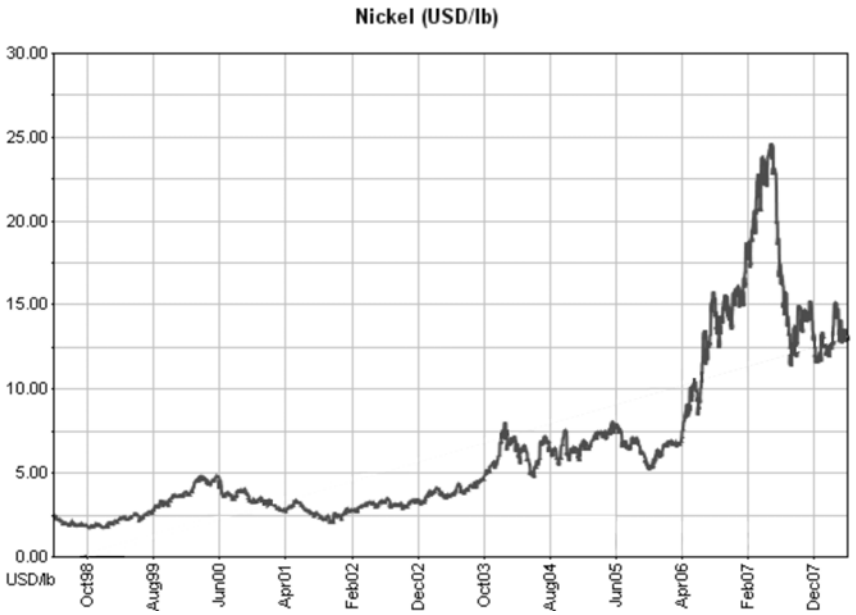

Figure 4.9
PRICE HISTORY OF COBALT, 1997-2007 [211B141]

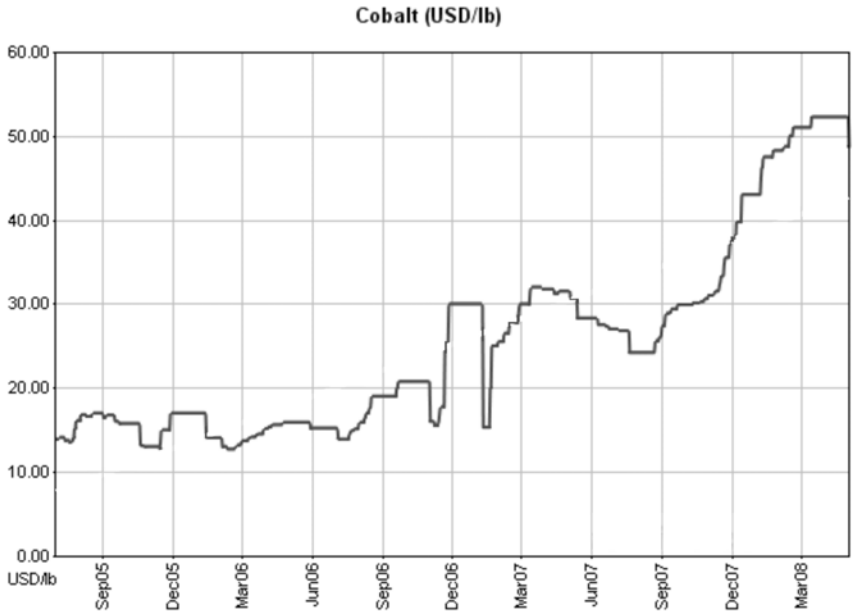

The price of molybdenum strongly depends on demand from the steel industry. Molybdenum's price was relatively stable through 2002, trading below 5 $/lb. The price began an exponential rise in March of 2004 to over 40 $/lb in 2005 in response to limited world roasting capacity and growing demand. Swing production is from primary molybdenum mines that have a limited capacity to change production rates in response to demand. Production costs from primary mines are 3-4 $/lb compared to 1-2 $/lb for copper byproduct costs since the cost of mining the ore is charged to the copper. By early 2006, the price declined to around 25 $/lb but then increased to 30 $/lb in early 2007. Current production meets demand, but a shortfall is predicted between 2009 and 2015 due to global roaster capacity. Growth in demand is for hydroprocessing catalysts and nuclear power plant construction. Western demand is projected to grow 3%/y, while demand in China and the Commonwealth of Independent States is projected to increase about 10%/y resulting in a global demand growth of about 4.5%/y [211B142, 211B145, 211B146, 211B147].

The price of nickel was relatively stable through September 2003, cycling between 2.50 and 5 $/lb. The price range then rose to 5 to 7.50 $/lb through April 2006 while molybdenum peaked. The price spiked in early 2007 to about 24.50 $/lb before cycling between about 12.00 and 15.00 $/lb the second half of the year and into 2008 [211B142].

In contrast, the quarterly average price trend of cobalt generally declined from over 20 $/lb in 1997-mid 1998 to below 7.50 $/lb during 2002 due to the slow down in the world economy. During 2003, the price increased to about 14 $/lb since very little metal was available at a time of raising demand. Cobalt closed 2003 at over 20 $/lb. The price jumped to over 25 $/lb during the first half of 2004 but dropped suddenly to about 18 $/lb as high prices encouraged substitution. The price continued to decline through mid 2006 to about 12.50 $/lb. The price then began a strong increase to about 30 $/lb in mid 2007 and continued a steep rise to about 49 $/lb in the first quarter of 2008.

Nearly half the world's reserves of cobalt are in the Democratic Republic of the Congo. Cobalt is usually found in combination with nickel or copper and until recently has been produced as a byproduct of copper refining. Cobalt as a by product of nickel refining increased significantly. In 2005, nearly 40% of refined cobalt is estimated to be produced as the main product. The supply of refined cobalt from 2001 through 2007 produced by primary refiners is summarized in the following table in tonnes:

2001	2002	2003	2004	2005	2006	2007
39,974	41,213	44,895	49,536	54,834	53,632	53,723

Source: 211B141

These figures do not include production from companies treating various cobalt-containing intermediates and scrap. Since 2002, demand to 2006 in the U.S. and Western Europe remained relatively steady while demand in Asia increased by 80% [211B141, 211B147].

Tungsten prices are generally quoted in the form of ammonium tungstate in terms of metric ton units (MTU). A MTU is one hundredth of a metric ton (1000 kg) of contained tungsten trioxide (equivalent to 7.93 kg or 17.478 lb of metal). Tungsten prices ranged from 50 to 100 $/MTU from January 2000 to 2005. In 2003, the only operating Canadian tungsten project closed, resulting in a supply shortage that drove the price up from 2003 to 2005. The price increased significantly from 65-95 $/MTU in 2004 to peak at 290 $/MTU in mid-2005. Since then through early 2007, the price has fluctuated around 250 $/MTU. Also, China has reduced subsidies for state owned mines and a number have closed. The formerly large Russian stockpile is believed to be close to depletion. Current world demand is believed to be greater than mine output. Demand is growing with the growth of the principal economies causing the price increase [211B148].

INSTALLED RESID HYDROCRACKING CAPACITY

In this subsection, we discuss worldwide installed capacity for resid hydrocracking as of January 1, 2008, based on information from the annual refinery survey published in the *Oil and Gas Journal* [211B197]. The reported capacities are on a refinery basis. Of the world's 655 refineries tabulated by the *Oil and Gas Journal*, 167 or 25.5% are identified as having hydrocracking capacity. Total world hydrocracking capacity of all kinds is 4,864,439 B/cD or 12.5 vol% of the 38,945,469 B/cD of atmospheric crude distillation capacity of the hydrocracking refineries.

Of the refineries with a hydrocracker, 18 or 2.7% of the total refineries, and 11% of the hydrocracking refineries, are reported as having resid hydrocrackers. Refineries identified as having residue hydrocracking are summarized in Table 4.18 and listed individually in Table 4.19. Resid hydrocracking capacity is mainly located in the more developed regions. The Pacific-Asia region has six of the 18 resid hydrocrackers; five are in North America and four in Western Europe.

The worldwide capacity for resid hydrocracking averages 31,900 B/cD, but ranges from 5,000 B/cD to 87,000 B/cD. By region, the average capacity is 37,550 B/cD in North American, 33,000 is Asia-Pacific and 30,125 B/cD in Western Europe. Figure 4.10 and Figure 4.11 and Table 4.20 show the worldwide capacity distribution by number and by volume respectively.

Table 4.18
WORLD HYDROCRACKING CAPACITY SUMMARY, B/CD (NUMBER OF REFINERIES)

Region	Distillate Hydrocracking	Resid Hydrocracking	Lube Oil Manufacture	Other Hydrocracking
Western Europe	894,184 (22)	120,500 (4)	800 (1)	90,880 (3)
Eastern and Central Europe	166,020 (5)	62,582 (2)	7,534 (2)	-0- (0)
Asia-Pacific	587,175 (23)	198,013 (6)	21,440 (2)	-0- (0)
South & Central American	122,400 (4)	-0- (0)	-0- (0)	20,000 (1)
Former Soviet Union	68,356 (3)	-0- (0)	7,200 (1)	18,700 (1)
Middle East	601,190 (21)	5,000 (1)	10,000 (1)	39,651 (2)
Africa	61,754 (4)	-0- (0)	-0- (0)	-0- (0)
Outside North America	2,491,079 (82)	386,095 (13)	46,974 (7)	169,231 (7)
North America	1,241,750 (40)	187,780 (5)	89,930 (3)	251,600 (10)
World	3,732,829 (122)	573,875 (18)	136,904 (10)	420,831 (17)

Table 4.19
RESIDUE HYDROCRACKING REFINERIES CAPACITIES

		Distillation		Total		Hydrocracking	
Country/Company	**Location**	**Crude**	**Vacuum**	**Coking**	**FCC**	**Distillate**	**Resid**
Finland							
Neste Oil	Porvoo	200,000	70,100		12,900	52,900	41,800
Germany							
Deutsche BP AG Erdol Raffinerie GMBH	Lingen	91,000	41,000	24,000			29,900
Italy							
Raffineria di Milazzo SpA	Milazzo, Messina	241,300	69,700		44,500	33,900	23,400
Netherlands							
Shell Nederland Raffinaderij BV	Pernis	406,000	440,000		49,000	56,300	25,400
Total Western Europe		**938,300**	**620,800**	**24,000**	**106,400**	**143,100**	**120,500**
Poland							
PKN Orien SA	Plock/ Trezebina	372,950	205,123		32,985	74,326	39,582
Slovakia							
Slovnaft, Joint Stock Co.	Bratislava	115,000	55,000		18,000	19,000	23,000
Total Eastern Europe		**487,950**	**260,123**	**0**	**50,985**	**93,326**	**62,582**
Japan							
Japan Energy Co.	Mizushima, Okayama	194,940	103,550	23,400	46,800		27,900
Tonen/General Sekiyu Seisei KK	Kawasaki	296,000	94,500		87,500		22,500
		490,940	**198,050**	**23,400**	**134,300**	**0**	**50,400**
Malaysia							
Petronas	Melaka II	126,000	68,000	24,000			36,000
South Korea							
SK Corp.	Ulsan	817,000	78,850		45,000		27,000
S-Oil Co. Ltd.	Onsan	520,000	160,000		60,000		60,000
		1,337,000	238,850		105,000		87,000

Table 4.19 (Concluded)
RESIDUE HYDROCRACKING REFINERIES CAPACITIES

		Distillation		Total		Hydrocracking	
Country/Company	**Location**	**Crude**	**Vacuum**	**Coking**	**FCC**	**Distillate**	**Resid**
Thailand							
Thai Oil Co. Ltd.	Sriracha	192,850	93,100		9,230	18,460	24,613
Total Asia-Pacific		**2,146,790**	**598,000**	**47,400**	**248,530**	**18,460**	**198,013**
Iraq							
Midland Refineries Co.	Daura, Bagdad	110,000	20,000			18,000	5,000
Total Middle East		**110,000**	**20,000**	**0**	**0**	**18,000**	**5,000**
Outside North America Total		***3,683,040***	***1,498,923***	***71,400***	***405,915***	***272,886***	***386,095***
Mexico							
Petroleos Mexicanos	Salamanca	245,000	143,000	0	40,000	0	18,500
United States							
Valero Energy Corp.	Delaware City, DE	190,000	102,000	47,000	82,000		18,000
Motiva Enterprises LLC	Convent, LA	235,000	104,000		86,000		51,780
BP PLC	Texas City, TX	475,000	237,000	43,000	175,000	60,000	70,000
Valero Energy Corp.	Sunray, TX	166,660	53,200		54,465		29,500
		1,066,660	**496,200**	**90,000**	**397,465**	**60,000**	**169,280**
Total North America		1,311,660	639,200	90,000	437,465	60,000	187,780
World Total		***4,994,700***	***2,138,123***	***161,400***	***843,380***	***332,886***	***573,875***

Table 4.20
RESIDUE HYDROCRACKERS – GLOBAL DISTRIBUTION OF CAPACITIES

Capacity Range, 1,000 BPcD	Number of Refineries	Number Distribution, %	Volume Distribution, %
Below 10	1	5.6	0.9
10-20	2	11.1	6.4
20-30	9	50.0	40.6
30-40	2	11.1	13.2
40-50	1	5.56	7.3
50-60	1	5.56	9.0
60-70	1	5.56	10.5
70-80	1	5.56	12.2
Total	18	100.0	100.0

Figure 4.10
WORLD RESIDUE HYDROCRACKING REFINERIES, NUMBER DISTRIBUTION

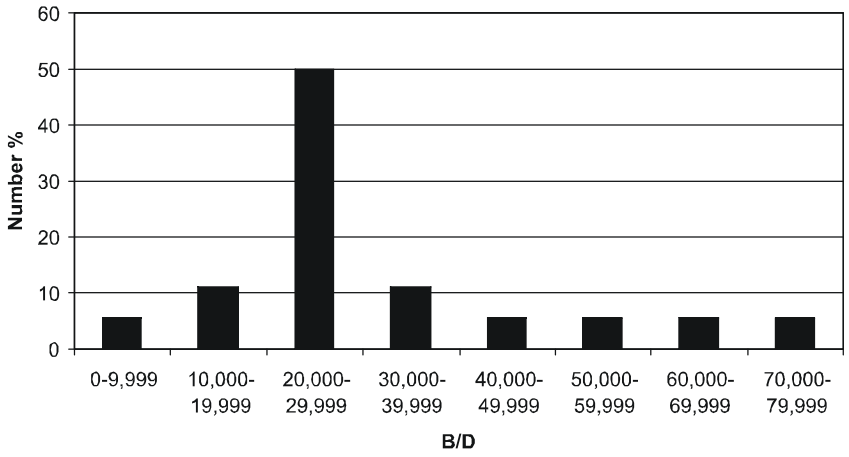

Figure 4.11
WORLD RESIDUE HYDROCRACKING REFINERIES, CAPACITY DISTRIBUTION

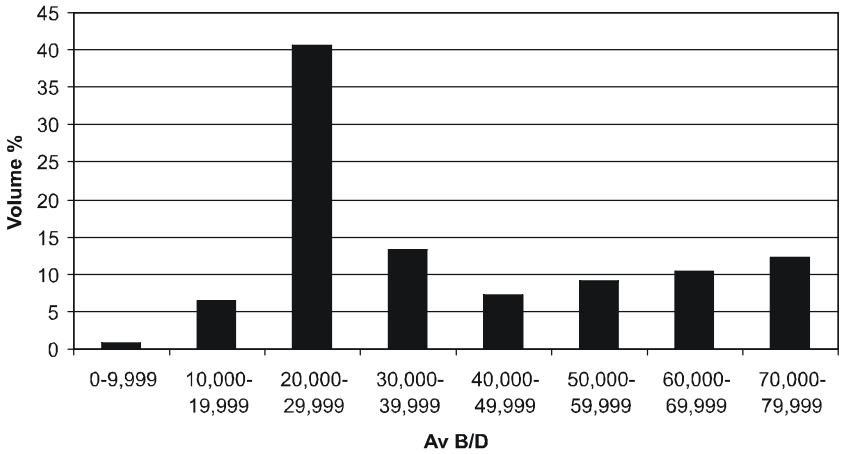

New Construction

According to the International Energy Agency, new refineries starting up in the next 5 years are more complex than existing refineries and will produce a higher percentage of light products and less (heavy fuel) oil. Demand for heavy, sour crudes will increase due to significant upgrading capacity additions. New hydrocracking capacity and higher global distillation capacity could ease a tight diesel fuel market. Future U.S. capacity expansions are anticipated to include expanding hydrocracking capacity to produce diesel fuel due to strength in diesel fuel prices relative to gasoline and the forecasted growth in diesel fuel demand relative to gasoline [211B160].

A major portion of U.S. refining investments have been for processing Canadian oil sands and heavy crudes. Examples are expansions at Motiva's Port Arthur, TX refinery, Marathon's Detroit, MI refinery, ConocoPhillips's Wood River, IL refinery and BP's Whiting, IN refinery [211B165].

Several key factors are influencing current investment decisions: the unprecedented high cost of raw materials, the huge capital costs and the length of time required to start-up any new conversion capacity. The time between the start of design and start-up of new refineries is now about four-to-six years. The time for individual units is shorter. Robust demand for new refineries and heavy oil conversion projects is forecast to continue in 2008 [211B165].

Announced new or planned construction (revamps and expansions are excluded) of hydrocrackers of all types is listed in Table 4.21 by location. Hydrocrackers that may be in new whole refineries are not included. The announced capacities range from 15,000 B/D to 110,000 B/D. Of the twelve projects, five are located in the United States and three in Canada. The two largest are a resid hydrocracker under construction in Ft. Saskatchawan, Canada, by Shell Canada and a heavy oil hydrocracker planned for Teesside, U.K. by Sonhoe to produce premium ultra low sulfur diesel fuel, kerosene and petrochemical naphtha to be on stream in 2013-14. The latter plant is integrated with a gasification unit that will produce over 500 mt/d of hydrogen and over 240,000 therms/d of synthesis gas [211B182]. Two new units are mild hydrocrackers.

Table 4.21
ANNOUNCED NEW HYDROCRACKING CONSTRUCTION PROJECTS

Company	Location	Capacity, B/D	Status	Contractor/Licenser
Eastern Refinery Ltd.	Chittagong, Bangladesh	15,000	Planning, 2009	---
North West Upgrading Inc.	Sturgeon Co., Alberta, Canada	32,000	Planning, 2010	UOP LLC
OPTI Canada Inc.	Ft. McMurray, Alberta, Canada	---	Engineering	Fluor Corp.
Shell Canada	Ft. Saskatchawan, Canada	100,000/Resid hydrocracker	Construction, 2010	Bechtel/Chevron Lummus Global
Bayernoil	Bavaria, Germany	---	Engineering, 2008	Flour Corp.
Grupa Lotos SA	Gdansk, Poland	45,000	Engineering, 2010	Technip
Sonhoe	Teeside, U.K.	110,000/heavyoil	Planned, 2013-14	
Holly Corporation	Woods Cross, Utah, USA	15,000	Engineering, 2008	Benham Constructors/ Process Dynamics
Holly Corporation	Artesia, NM, USA	15,000/Mild hydrocracker	Construction, 2008	Koch Partners LP/ Process Dynamics
Motiva Enterprises LLC	Port Arthur, TX, USA	75,000	Construction, 2010	Bechtel/Shell Lummus Global
Navajo Refining Co.	Artesia, NM, USA	15,000/Mild hydrocracker	Engineering, 2008	Koch Partners LP/Process Dynamics Inc.
Valero Energy Corp.	Port Arthur, TX, USA	50,000	Planning, 2010	---

Source: 211B198

5 GENERAL PROCESS REVIEW

Hydrocracking heavy feedstocks, although similar to hydrocracking gas oils, is more difficult and requires knowledge of the oil's composition and adjustments to the process. The heavy oils are complex higher boiling oils containing significant asphaltenes and heteroatoms. The physical and chemical nature of the feedstock not only determines the yield and quality of the products but also it's processing. The objective is to minimize coking while converting the asphaltenes and high molecular weight polar compounds into lower molecular weight products. In addition, product asphaltenes must be stable, i.e. they do not separate from the lighter oil. Thermal cracking is important in hydrocracking of heavy oil. The principal task of the bifunctional catalyst is to suppress coke formation through hydrogenation by metals such as molybdenum, nickel, iron and cobalt. The acidic substrate contributes to the cracking.

Gas oils from bitumen and heavy oil are also difficult to convert since they contain more heteroatoms, especially nitrogen, that more rapidly deactivate catalysts than gas oil from conventional crude oils. New catalysts produce only limited improvements in longevity. Process modifications are required to convert these unconventional gas oils in order to meet product specifications [211B116]. In some respects, these gas oils behave like residual oils.

CANADIAN CRUDE OILS

Properties of a typical Canadian crude oil and their vacuum residues are summarized in Table 5.1. Synbit and Dilbit have been processed by a few refiners in high blend ratios. These feedstocks are extremely difficult to desalt, difficult to vaporize, thermally unstable and corrosive as seen in the high acid numbers. For these reasons, conventional process and equipment designs are not adequate [211B167].

Table 5.1
TYPICAL CANADIAN CRUDE OIL AND RESID PROPERTIES

	Sweet Synthethic	Lloydminister B	Cold Lake (DilBit)	SynBit
Whole Crude				
Specific Gravity	0.8649	0.9201	0.9210	0.9356
Gravity, API	32.1	22.3	22.1	19.7
Sulfur, wt%	0.14	2.75	3.69	2.49
Conradson Carbon, wt%	0.06	8.72	11.47	7.56
Acid Number	0.01	0.80	1.44	1.49
LPGs				
Volume %	2.10	2.33	0.94	1.10
Weight %	1.40	1.45	0.59	0.68
Naphtha, IBP to 360°F (182°C)				
Volume %	18.4	18.2	23.0	9.9
Weight %	15.4	14.2	17.3	7.7
Jet Fuel/Kerosene, 360 to 490°F (182 to 254°C)				
Volume %	12.8	4.3	4.7	7.3
Weight %	12.5	3.9	4.3	6.6
Diesel Fuel, 490 to 650°F (254 to 343°C)				
Volume %	28.0	14.4	8.8	19.8
Weight %	28.8	13.9	8.6	18.9
Gasoil, 650 to 1,000°F (343 to 538°C)				
Volume %	38.2	27.7	23.1	35.5
Weight %	41.3	28.7	24.1	36.0
Vacuum Resid, 1,000°F+ (538°C+)				
Volume %	0.5	33.0	39.5	26.4
Weight %	0.5	37.9	45.2	30.0
Specific Gravity	0.9598	1.0557	1.0549	1.0644
Gravity, API	15.9	2.5	2.6	1.4
Sulfur, wt%	0.40	4.55	5.87	5.89
Total Nitrogen, ppmw	1,968	5,513	6,755	6,002
Conradson Carbon, wt%	0.5	22.9	25.2	24.9
Nickel, ppmw	0.1	126.3	145.5	119.8
Vanadium, ppmw	0.1	293.0	367.3	317.0
Viscosity, cSt @ 122°F (50°C)	1.23E+03	7.57E+07	3.12E+07	3.72E+07

Source: 211B177

Properties of bitumens extracted *in-situ* and *ex-situ* are compared with seven heavy oils from reservoirs in Saskatchewan and with an Alberta conventional crude oil pipeline blend. As expected, the bitumens are associated with less saturates (16-17% vs. 23-30%), more resins (37% vs. 29-33%) and more asphaltenes (18-21% vs. 10-16%) than the heavy oils. The conventional crude contained a higher amount of saturates (53%) but lower concentrations of

both resins (19%) and asphaltenes (3%). All these oils contained a relatively narrow range of aromatic content (25-32%). Selected properties of these oils are summarized in Table 5.2. The sulfur and nitrogen contents of saturates, aromatics, resins and asphaltenes (SARA) separated from the whole crude oils are summarized in Table 5.3. Saturates are relatively low in sulfur and nitrogen. The sulfur is over ten times more concentrated in the aromatics, except for Heavy Oil B, than the saturates and increases from the aromatics to resins to asphaltene fractions. Except for Heavy Oil B, the aromatics contain higher nitrogen levels than the saturates. In all oils, nitrogen contents increase rapidly in the resins and asphaltenes fractions. The resin fractions contain more than 40% of the total nitrogen [211B116].

Table 5.2
PROPERTIES OF PARENT CANADIAN CRUDE OILS

Crude Type	MW_n[a]	H/C	Sulfur, wt%	Nitrogen, wt%
Bitumen, *in-situ*	498	1.44	4.68	0.52
Bitumen, *ex-situ*	588	1.46	5.70	0.63
Heavy oil A	459	1.52	3.07	0.48
Heavy oil B	462	1.53	4.99	0.47
Heavy oil C	453	1.57	5.10	0.51
Heavy oil D	468	1.61	5.28	0.45
Heavy oil E	440	1.52	3.64	0.56
Heavy oil F	465	1.66	3.21	0.49
Heavy oil G	441	1.58	3.10	0.54
Conventional	364	1.66	1.36	0.47

Source: 211B116

[a] Gel permeation chromatography

Table 5.3
SULFUR AND NITROGEN ANALYSIS OF SARA FRACTION OF CANADIAN CRUDE OILS

	Sulfur, % of fraction				Nitrogen, % of fraction			
Crude Type	S[a]	A	R	As	S	A	R	As
Bitumen, *in-situ*	0.30	3.79	6.19	7.9	0.15	0.17	0.80	1.21
Bitumen, *ex-situ*	0.23	4.40	6.97	8.65	0.29	0.33	0.75	1.21
Heavy oil A	0.14	3.24	5.10	5.99	0.24	0.33	0.84	1.30
Heavy oil B	0.43	4.05	7.30	8.6	0.18	0.12	0.57	1.16
Heavy oil C	0.13	5.59	7.36	8.56	0.23	0.24	0.67	1.19
Heavy oil D	0.47	5.49	7.75	8.74	0.12	0.16	0.65	1.16
Heavy oil E	0.14	3.86	5.34	6.10	0.11	0.24	0.70	1.11
Heavy oil F	0.12	2.69	4.64	5.93	0.19	0.22	0.73	1.16
Heavy oil G	0.16	3.45	5.15	6.04	0.22	0.26	0.80	1.19
Conventional	0.11	2.26	3.82	4.40	0.20	0.23	0.73	1.14

Source: 211B116

[a] Saturates (S), Aromatics (A), Resins (R) and Asphaltenes (A)

The *ex-situ* bitumen contains up to 5 wt% (about 1% of the original bitumen) of associated mineral rich solids. These solids are nano-sized aluminosilicates clay particles covered with patches of polar aromatic, toluene insoluble organic material. This enables the solids to be wettable in both oil and water. These solids are similar to mine waste solids that separate the bitumen rich layers suggesting imperfect excavation is the primary source of the solids in the ex-situ bitumen. In water based extraction, some particles are dispersed and form a colloidal system in the bitumen phase. *In-situ* bitumen is practically free of solids [211B116].

Properties of atmospheric and vacuum residues obtained by distillation of Athabasca bitumen produced by the steam assisted, gravity drainage process are summarized in Table 5.4. Heavy crude oils, bitumen and their residue oils contain significantly higher amounts of sulfur and nitrogen compounds than conventional heavy crude oils. Sulfur in the bitumen and its residua is about 5-6.4% compared to about 3 to 3.5% sulfur in Arabian heavy, Orinco and Maya heavy crude oils. Similarly, nitrogen is about 5400 to 7400 ppmw compared to about 1700 to 2200 ppmw (but 6700 ppmw for Orinoco) for these conventional heavy crude oils. Most of the nitrogen resides in heterocyclic organonitrogen compounds. Metal (nickel and vanadium) content is comparable to these conventional heavy crude oils (240-520 ppmw vs. 75-620 ppmw).

Table 5.4
PROPERTIES OF HEAVY CRUDE OILS AND ATHABASCA BITUMEN AND RESIDS

	Arab Heavy Crude	Orinco Heavy Crude	Maya Heavy Crude	Athabasca Bitumen	Athabasca Atmospheric Residue	Athabasca Vacuum Residue
API Gravity	27.9	8.0	22	8.4	5.5	1.07
Sulfur, wt%	2.9	3.6	3.6	4.9	5.6	6.4
Nitrogen, ppmw	1700	6700	2200	5400	5500	7300
Vanadium, ppmw	57	500	275	175	256	384
Nickel, ppmw	18	120	50	65	91	136
Conradson Carbon residue, wt%	8	17	11.5	13	15.9	23.3

Source: 211B190

The yield of atmospheric and vacuum residue from several heavy crude oils are compared to Ekofisk North Sea crude, a light conventional crude oil, and Alaska North Slope crude, a heavy conventional crude oil, in Table 5.5. For the Ekofisk crude oil, the yields of atmospheric and vacuum residue respectively are 25.2 vol% of the crude and 13.2 vol% while the Alaska North Slope crude yields 51.5 vol% and 21.4 vol%. The yields of atmospheric residue from the heavy crude oils range from 45.9 vol% for Kuwait Export to 85.3 vol% for Athabasca tar sand while the yields of vacuum residue are usually considerably higher than either the Ekofisk or Alaska North Slope crudes ranging from 21.8 vol% for Kuwait Export to 51.4 vol% for Athabasca tar sand [211B065].

Table 5.5
YIELDS OF ATMOSPHERIC AND VACUUM RESIDUE FROM DIFFERENT HEAVY CRUDE OILS

Crude Oil	Gravity, API	Ni+V, ppmw	S, wt%	Carbon residue, wt%	Residue yield (vol% of crude) AR, 649°F+ (343°C+)	Residue yield (vol% of crude) VR, 1049°F+ (565°C+)
Alaska, North Slope	14.9	71	1.8	9.2	51.5	21.4
Arabian, Safaniya	13.0	125	4.3	12.8	53.8	23.2
Canada, Athabasca	5.8	374	5.4	15.3	85.3	51.4
Canada, Cold Lake	6.8	333	5.0	15.1	83.7	44.8
California, Hondo	7.5	489	5.8	12.0	67.2	44.3
Iranian	---	197	2.6	9.9	46.7	---
Kuwait, Export	15.0	75	41	11.0	45.9	21.8
Mexico, Maya	7.9	620	4.7	15.3	56.4	31.2
North Sea, Ekofisk	20.9	6	0.4	4.3	25.2	13.2
Venezuela, Bachaquero	9.4	509	3.0	14.1	70.2	38.0

Source: 211B065

FEEDSTOCK CHARACTERIZATION

Heavy oils can be envisioned as composed of three major components: oil, resins and asphaltenes, which also contain heteroatoms (sulfur, nitrogen, oxygen and metals).

Most of the nitrogen present in heavy crude oils resides in heterocyclic organonitrogen compounds of either basic or nonbasic ring structures. The nonbasic nitrogen compounds are more difficult to remove with conventional sulfided hydroprocessing NiMo catalysts than the basic compounds since the nonbasic compounds adsorb weaker on the catalyst. In HDN of mixtures of basic and nonbasic nitrogen compounds, reactivity of the basic compounds is always greater than their nonbasic analogs. This can be explained by the higher adsorption energy of all basic nitrogen compounds than non-basic compounds [211B320].

We first summarize analytical techniques applied to characterize heavy oils before discussing the composition of residues. Asphaltenes are a significant component of residue oils. Asphaltene structure and characteristics are briefly discussed. We conclude with a brief discussion of sulfur and nitrogen species present in heavy oils.

Properties of heavy and residual oils are reviewed in other PEP Reports: Report 228, *Refinery Residue Upgrading*, (2000), Report 195A, *Advances in fluid catalytic cracking*, (2005) and PEP Report 214A, *Heavy Oil Hydrotreating* (2007).

Analytical Techniques

Heavy oil fractions are very highly complex mixtures of a range of compounds of differing polarities such as paraffins, aromatic and heteroatomic molecules. The fractions are enriched in

the most polar compounds such as resins and asphaltenes. The asphaltene fraction of the heavy oil contains molecules varying in aromaticity with different contents of heteroatoms, metals and functional groups. Detailed characterization of these highly complex mixtures is difficult and tedious. The choice of analytical techniques is quite limited. Average structural information obtained cannot be representative of all chemical and structural variety in the mixture. The aggregation state of the asphaltenes strongly depends on the experimental conditions (concentration, temperature and solvent). To reduce the complexity, heavy oil fractions are first separated into subfractions by distillation, by selective adsorption onto varied supports or by solubility in solvents. Heavy oils and their subfractions are characterized by chemical and colloidal characteristics. Numerous analytical techniques are used to measure the chemical composition, the main functional groups, the structural state of metals and other heteroatoms in macromolecules. The main colloidal structure parameters are the molecular weight and the mass or size polydispersity of aggregates. Analytical procedures for characterizing heavy oils are summarized in Table 5.6 [211B118].

Table 5.6
SUMMARY OF THE ANALYTICAL PROCEDURES USED FOR CHARACTERIZATION OF HEAVY OIL FRACTIONS

	Chemical Characterization		Colloidal Characterization	
Fractionation Methods	**Techniques**	**Information**	**Techniques**	**Information**
• Boiling point	• Pyrolysis-gas chromatography-mass spectrometry (Py-GC/MS)	General composition	• Vapor pressure osmometry (VPO)	Molecular weight
• Chemical classes	• High pressure liquid chromatography (HPLC)	Functional groups	• Size exclusion chromatography (SEC)	Hydrodynamic volume distribution
• Degradation	• ^{13}C Nuclear magnetic resonance (NMR)	Structural motives	• Mass spectrometry (MS)	Molecular weight
• Solubility	• Infrared spectroscopy (IR)	Functional groups	• Small angle x-ray and Neutron scattering (SAXS-SANS)	$R_G \rightarrow$ Molecular weight
	• X-ray photoelectron spectroscopy- Extended x-ray fine structure- X-ray absorption near edge spectroscopy (XPS-EXAFS-XANES)	Environmental and chemical functionalities	• Pulsed field gradient spin-echo NMR (PFG-^{1}H NMR)	D → hydrodynamic radius

Source: 211B118

Resid Composition

Properties of four residue oils obtained from three conventional crude oils and one heavy crude oil are given in Table 5.7. The heavy crude AR is more viscous and contains a significantly higher level of sulfur, Conradson carbon residue, asphaltene and metals than the Arabian AR. The levels are comparable to the VR levels.

Table 5.7
CHARACTERISTICS OF FOUR PETROLEUM RESIDUES

Type of crude Type of residue Original crude	Conventional Atmospheric Arabian	Vacuum Kirkuk	Vacuum Safaniya	Heavy Atmospheric Cold Lake
Yield, wt% crude	48.0	18.7	34.0	73.8
Specific gravity	0.988	1.021	1.035	1.024
Viscosity at 212°F (100°C), mm^2/s	95	880	3900	1095
Sulfur, wt%	3.95	5.14	5.28	5.05
Conradson carbon residue, wt%	13.8	18.2	23.0	18.3
C_7 asphaltenes, wt%	5.7	7.5	11.5	10.5
Metals (Ni+V), ppm	104	189	203	325

Source: 211B294

A modified SARA analysis of some Chinese and Middle Eastern vacuum residues, Table 5.8, shows a wide range of compositions.

Table 5.8
MODIFIED SARA ANALYSIS OF VACUUM RESIDUES FROM CHINESE AND MIDDLE EASTERN CRUDES

	Saturates, wt%	Aromatics, wt%	Resin, wt%	C_7 Asphaltenes, wt%
Daqing crude	34.8	35.5	29.5	0.0
Dagang VR	27.8	28.7	43.4	0.0
Guado VR	14.6	33.0	47.7	4.7
Shengli VR	16.1	30.6	51.1	2.2
Huabei VR	37.6	31.4	29.9	1.1
Liaohe VR	20.8	31.8	41.6	5.7
Oman VR	26.3	40.6	31.2	2.0
S-A-L VR	16.5	49.5	26.8	7.3

Source: 211B179

The properties of vacuum bottoms from Forties, Cold Lake and a blend of Lloyd and Cold Lake are shown in Table 5.9. The Forties vacuum bottoms contained a higher percentage of pitch (977°F+, 525°C+) compared to the other bottoms, but it contained less asphaltenes, microcarbon residue and heteroatoms. The maltenes (pentane solubles) of vacuum bottoms from Athabasca, Cold Lake and Forties were further separated by a method similar to the SARA analysis (Table 5.10). The pitch contents of the bitumen and the Forties vacuum bottoms are similar as are the concentrations of the other maltenes subfractions. The pitch content of the Cold Lake vacuum bottoms is much lower and the compositions are not comparable to the other feedstocks.

Table 5.9
PROPERTIES OF THREE VACUUM BOTTOMS FROM CANADIAN CRUDE OILS

	Forties VB	Cold Lake VB	Lloyd/Cold Lake VB
Density, g/ml	1.039	1.039	1.03
Oils, wt%	91.76	75.6	---
Asphaltenes, wt%	8.15	24.4	20.9
Aromaticity, ^{13}C MNR	30	35	33 (31)
Pitch Content (977°F+, 525°C+), wt%,	93.7	75.4	74.1
Microcarbon residue, wt%	16.3	20.2	18 (18)
Molecular weight, g/mol	948	1071	687 (800)
Viscosity, cST at 212°F (100°C)	509.1	2748	80.8 (at 140°F, 60°C)
at 248°F (120°C)	185.9	1010	---
at 275°F (135°C)	100.8	377.8	---
Elemental, wt%			
Carbon	87.1	82.66	84.44
Hydrogen	10.6	9.82	9.69
Nitrogen	0.43	0.51	0.58
Sulfur	1.24	5.42	5.43
Oxygen	<0.5	0.8	---
Ash	---	0.04	0.1
H/C	1.46	1.42	1.37
Metals, ppmw			
Vanadium	29	269	207
Nickel	13	104	96
Iron	3	175	---

Source: 211B179

Table 5.10
COMPONENTS OF VACUUM RESIDUES (WT% ON HEAVY OIL/BITUMEN)

	Forties VB	Cold Lake VB	Athabasca VB
Pitch Content (977°F+, 525°C+)	93.7	75.4	96.4
Maltenes	90.9	75.6	59.9
Asphaltenes	9.1	24.4	40.1
Saturates	14.5	11.12	3.36
Mono-diaromatics	8.83	4.76	3.18
Polyaromatics	51.11	41.52	38.1
Polars	16.35	18.22	15.36

Source: 211B179

Narrow fractions based on boiling point of Athabasca bitumen vacuum resid obtained by supercritical fluid extraction are characterized in detail in Table 5.11. Relatively small molecules (500-1,500 g/mol) comprise about 60 wt% of the residue. The remaining larger molecules (40 wt%), including asphaltenes (fraction 9), average 1,500-4,200 g/mol. Of course, the fractions become more refractory (contain higher amounts of sulfur, nitrogen, metals and microcarbon residue) and more deficient in hydrogen (lower H/C ratio) as the boiling point increases. The SARA analysis shows saturates are concentrated in the front end of the residue, decreasing from 26.8 wt% in the first fraction to 1.4 wt% in fraction 4. Aromatics are essentially constant ranging from 40.8 to 66.7 wt% in all the fractions until dropping in fraction 9 to 2 wt%. Resins increase with increasing molecular weight in fractions 1 through 8. Fraction 9 is mainly asphaltenes [211B120, 211B179].

Table 5.11
CHARACTERISTICS OF ATHABASCA BITUMEN VACUUM FRACTIONS OBTAINED BY SUPERCRITICAL FLUID EXTRACTION

	1	2A	2B	3	4	5	6	7	8	9	Pitch[a]
Pressure, MPa	4-5	5-5.5	5.5-6	6-7	7-8	8-9	9-10	10-11	11-12	>12	
wt% of pitch	12.7	9.8	7.6	10.6	6.5	4.4	3.3	2.6	2.1	40.4	100
Density at 68°F (20°C), g/ml	0.975	0.993	1.006	1.023	1.043	1.054	1.065	1.068	1.074	N/A[b]	1.087
Molecular Weight	506	755	711	799	825	948	1134	1209	1517	4185	1191
Sulfur, wt%	4.0	4.5	5.0	5.4	6.0	6.2	6.5	6.9	6.8	7.6	6.5
Nitrogen, ppm	3080	4100	4330	5070	6160	6810	7370	7530	7900	10500	4600
Carbon, wt%	84.5	83.5	83.5	84	83	84	83	83	82.5	78.5	82.7
Hydrogen, wt%	11.5	11.15	10.95	10.55	10.25	10.05	9.8	9.7	9.5	8	9
C/H (atomic)	0.612	0.624	0.635	0.664	0.675	0.697	0.706	0.713	0.724	0.818	0.766

Table 5.11 (Concluded)
CHARACTERISTICS OF ATHABASCA BITUMEN VACUUM FRACTIONS OBTAINED BY SUPERCRITICAL FLUID EXTRACTION

	1	2A	2B	3	4	5	6	7	8	9	Pitch[a]
Aromatic carbon[c], fa	0.26	0.29	0.25	0.33	0.36	0.40	0.37	0.43	0.43	0.49	0.41
Nickel, ppm	12.8	21.3	30.1	44.8	71.1	89.7	123	138	162	339	148
Microcarbon residue, wt%	5.6	7.9	10.8	14.3	18.2	21.5	24.7	26.5	28.7	78.9	26.7
Saturates, wt%	26.8	16.4	9.7	4.1	1.4	0.7	0.6	0.1	0	0	6.3
Aromatics, wt%	57.2	62.4	65.7	66.7	63.9	53.3	45.4	45.9	40.8	2	33
Resin, wt%	15.9	21.2	24.6	29.2	34.5	46	54	53.8	59.2	9.4	29.4
Asphaltenes, wt%	0	0	0	0	0	0	0	0	0	88.03	31.4

Source: 211B179

[a] Pitch = 993°F+ (534°C+) fraction

[b] N/A = not applicable

[c] C^{13}-NMR

Supercritical fluid extraction and fractionation (SFEF) separation of Athabasca bitumen residue produced end cut (fraction) and whole residue are characterized in Table 5.12. The concentrations of Conradson carbon residue, sulfur, nitrogen and the metals (Ni and V) are unevenly distributed between the whole residue and the heaviest fraction. The end cuts contain the most contaminants [211B018].

Table 5.12
CHARACTERIZATION OF SFEF RESIDUE END FRACTION AND WHOLE RESIDUE

	Daqing		Iranian Heavy		Athabasca Bitumen	
	Residue	End Cut	Residue	End Cut	Residue	End Cut
Yield, wt%		12.2		23.01		34.2
Density, g/cm^3	0.9392	0.9654	1.0222	1.0620	1.0596	1.0857
Conradson Carbon Residue, wt%	8.2	40.3	22.1	52.4	27.1	48.9
Molecular Weight (VPO)	1051	2458	909	4254	1191	4185
H:C atomic ratio	1.79	1.38	1.44	1.15	1.34	1.22
Sulfur, wt%	0.15	0.30	3.11	5.33	5.29	6.51

Table 5.12 (Concluded)
CHARACTERIZATION OF SFEF RESIDUE END FRACTION AND WHOLE RESIDUE

	Daqing		Iranian Heavy		Athabasca Bitumen	
	Residue	End Cut	Residue	End Cut	Residue	End Cut
Nitrogen, ppm	0.44	0.98	0.62	1.18	0.66	1.05
Nickel, ppm	7.6	111.6	90.0	258.0	160.0	339.0
Vanadium, ppm	0.1	1.2	205.8	536.0	422.0	877.0
Saturates, wt%	41.9	0.2	12.6	0.3	6.3	0.0
Aromatics, wt%	32.7	7.9	46.6	11.1	33.0	2.2
Resins, wt%	25.4	92.1	29.9	22.8	29.4	9.4
Asphaltenes, wt%	0.0	0.3	10.8	65.8	31.4	88.0

Source: 211B018

Asphaltenes

Asphaltenes, as discussed in PEP Report 228 *Refinery Residue Upgrading* (2000), are defined by solubility; the asphaltenes are generally soluble in toluene but insoluble in n-pentane, n-heptane and other paraffins. Asphaltenes are generally characterized as condensed aromatic nucleus with alkyl and alicyclic systems, having a very low hydrogen-to-carbon ratio, held together by valance bonds between heteroatoms (sulfur, nitrogen and metals). Asphaltene molecules are characterized as three to five unit sheets of condensed aromatic and naphthenic rings with paraffinic side chains. The sheets are held together by heteroatoms and/or polymethylene bridges, thioether bonds and vanadium and nickel complexes [211B092].

The asphaltene molecules appear to exist as aggregates called micelles, which are composed of an asphaltene core surrounded by a salvation sheath of resin molecules having both aromatic and aliphatic character. The aromaticity of these protective molecules declines until the hydrogen-to-carbon ratio at the outer boundary of the micelles about equals that of the continuous phase (the maltenes). When the entire micelle contains sufficient “buffer” molecules, the asphaltenes are said to be fully peptized or stabilized by this outer layer. A physical equilibrium is established between the core and sheath and between the micelle and the surroundings. The colloid is homogeneous in marcoproperties. The equilibrium can be disturbed in various ways: by adding high hydrogen-to-carbon ratio hydrocarbons, by increasing temperature or by using processing to cause compositional changes.

Structural characterization of asphaltenes isolated from Saudi Arabian heavy and medium crude oils (Table 5.13) by ruthenium ion catalyzed oxidation (RICO) shows the presence of polymethylene moities bridging two aromatic units. Asphaltenes from both crude oils are comprised of relatively large but peri-condensed aromatic structures [211B092].

Table 5.13
CHARACTERIZATION OF ASPHALTENES FROM SAUDI ARABIAN HEAVY AND MEDIUM CRUDE OILS

Asphaltenes	Arabian Heavy	Arabian Medium
Carbon, %	83.22	83.71
Hydrogen, %	8.25	8.33
Molecular Weight[a]	1866	1611
Nickel, ppm	19	15
Vanadium, ppm	60	45
$H_{aromatic}$, %	8.1	10.2
$H_{alphatic}$, %	91.9	89.9
$C_{aromatic}$, %	36.0	30.8
$C_{aliphatic}$, %	64.0	69.2

Source: 211B092

[a] by gel permeation chromatography

Asphaltenes are defined as components that are soluble in toluene but precipitate by the addition of an excess of liquid hydrocarbon, most often n-heptane (or n-pentane or n-hexane). Asphaltenes are extremely large, high molecular weight compounds, which generally boil above 1000°F (538°C). Maltenes are components that dissolve in n-hexane. Maltenes are generally smaller molecules than asphaltenes [211B308, 211B315].

A 20 year debate on the molecular weight order of magnitude now appears to be resolved by new analytical techniques and studies. The molecular weight range of 1000 to about 20,000 (by gel permeation chromatography and vapor pressure osmometry) is now believed to be high due to agglomeration during preparation or measurement. Bimodal molecular weight distributions from size exclusion chromatography are mainly due to association-dissociation rather than co-existence of two distinct molecular size groups. Traces of water in toluene solutions are found to promote aggregation of asphaltene sheets or particles. This observation implies polar forces are also important in the intermolecular binding of asphaltenes. Fluorescence depolarization (FD) and field ion mass spectroscopy both give a typical mean value of about 750 amu with a mass distribution width of roughly a factor of two. FD measures asphaltenes in very dilute solutions so aggregation is not a problem nor is fragmentation. Laser desorption mass spectroscopy, atmospheric pressure chemical ionization mass spectroscopy and electrospray ionization mass spectroscopy are in rough agreement. Size exclusion chromatography, although highly dependent on operating conditions, can be used for routinely providing only relative molecular weight distributions but suffers from association, adsorption on the column material and lack of appropriate standards. Concentration, temperature and solvent are important conditions to control along with the column material [211B312, 211B316].

Molecular weight of the asphaltenes is the main parameter in thermodynamic models for asphaltene solubility and precipitation. Uncertain molecular weight and molecular weight distribution data is one factor hampering the development of a sufficiently accurate model to predict precipitation and solubility. Better understanding of the mechanism of flocculation of the asphaltenes and better understanding of asphaltene chemistry are also needed [211B311].

Unit Structure

The asphaltene unit structure traditionally is viewed as parallel sheets of fused aromatic rings linked by aliphatic chains. The sheets contain heterocyclic sulfur, nitrogen and oxygen compounds. The sheets are surrounded by polar resin molecules associated with alkyl side chains on the edges of aromatic compounds and form a particle of diameter of about 20Å. The particles link with organometallic porphyrin compounds to form micelles of molecular weight up to ten thousands. This asphaltene "self-assembly" in solution through π and hydrogen bonds results in micellar and colloidal behavior [211B308, 211B312, 211B316].

Asphaltene solubility consists of a number of different equilibria that can be generalized into three types [211B311]:

1. Solubility or distribution between liquid (L) and solid (S) phases:

$$\text{Asphaltene (L)} \leftrightarrows \text{Asphaltene (S)}$$

2. Aggregation or association of asphaltene molecules (A):

$$A_1 + A_{i-1} \leftrightarrows A_i$$

3. Interaction or solubilization by resins (R):

$$A + R \leftrightarrows A - R$$

Asphaltene fractions separated by solubility increase a small amount (1.9 Å) in size (by FD) with decreasing solubility. The results of the study indicate the solubility fractions all contain the same molecular species but the fractions vary in the ratio at which each species is present. Thus it appears the solubility of a fraction from a given source affects the population distribution but not the molecular structure. Asphaltenes from similar source material have similar molecular dimensions; asphaltenes from very different source materials such as coal have different molecular sizes too. Recent FD results further showed most asphaltene molecules or micelles in petroleum have one fused aromatic ring system per molecule with peripheral alkane chain substituents. The asphaltene molecule is surrounded by resins. One study of Middle Eastern vacuum residue indicates the lightest fraction of asphaltenes also function as resins. Carbon Raman x-ray spectroscopy indicates the fused ring systems have a circular arrangement (pericondensed) [211B308, 211B309, 211B312, 211B316, 211B318].

Characteristics

Characteristics of selected asphaltenes obtained from 968°F+ (520°C+) vacuum residue from five crude oils originating from different types of organic matter are shown in Table 5.14. The Duri asphaltenes have a high H/C ratio indicating long alkyl chains; the Arjuna asphaltenes have a low H/C ratio and essentially no long paraffinic chains. The molecular weight is measured by size exclusion chromatography and should be regarded as relative values. The main differences between the asphaltenes are due to their origin, maturity and biodegradation state as well as their tendency to associate or dissociate under the analytical conditions [211B316].

Table 5.14
CHARACTERIZATION OF ASPHALTENES FROM VACUUM RESIDUE FROM SELECTED CRUDE OILS

Crude (Source)	Origin Type	Asphaltenes in 968°F+ (520°C) cut, wt%	Asphaltene H/C	M_w, g/mol	M_{z+1}, g/mol
Duri (Indonesia)	lacustrine	5.7	1.10	7,430	24,200
Safanyia (Arabian Heavy)	marine	17.1	1.07	6,330	19,700
Arjuna (Indonesia)	terrestrial	3.5	1.04	5,200	18,300
Ural (Russia)	marine	5.6	1.04	5,170	15,000
Aramco (Arabian Light)	marine	7.1	0.98	5,180	14,400

Source: 211B316

Weighted average molecular weights: $M_w = \sum N_i M_i^2 / \sum N_i M_i$; $M_{z+1} = \sum N_i M_i^4 / \sum N_i M_i^3$ where N_i is the number of molecules of molecular weight M_i

FD studies show asphaltenes lacking long alkane side chains are relatively small molecules with small fused ring systems whereas molecules with alkane side chains are larger molecules. Asphaltene solubility is determined by two competing effects: steric hindrance from long alkane chains and intermolecular binding by van der Waals interactions between the ring stacks. The balance between these effects determines the solubility. If the ring systems are large with little alkane substitution, then the molecules can stack efficiently and will not dissolve in toluene (and therefore are not considered to be asphaltenes). This concept is supported by high resolution transmission electron microscopy on asphaltenes and model compounds and by melting point data of alkyl aromatics. These conclusions all depend upon the accuracy of the FD molecular weight results. Two FD studies of solubility fractions of asphaltenes obtained from varying the ratios of toluene and n-heptane concluded the different subfractions appear to consist of the same molecules but in different distributions. A smooth variation of molecular properties of the subfractions could be interpreted by changes in solvating power of the different solutions. However, in another study this time using toluene and acetone, a polar, strongly hydrogen bonding solvent, showed non-monotonically changing asphaltene molecular properties of the subfractions as the solvent ratios changed, indicating a more complex intermolecular interaction than simply the dominant van der Waals forces. This complex behavior is probably related to dipolar interactions between asphaltenes and the solvent. Whether the effects of polarity are observed or not appears to depend upon the particular solvent system [211B312].

Heavy feedstocks containing high asphaltene contents are difficult to hydroprocess, especially those with a high degree of condensation. When the ratio of internal aromatic carbon atoms to peripheral aromatic carbons is high (over 3), the asphaltene is difficult to process. A ratio of 1.5 to 2.0 indicates more reactive asphaltenes. Asphaltenes both hydrogenate and crack, which changes their structure. Feedstocks with higher ratios of polar to non-polar asphaltenes exhibit a lower reactivity to hydrocracking. Because of the diversity of asphaltene structures, an overall picture of the changes caused by hydrotreating is not possible. Observations with different feeds or at different reaction conditions often appear to be contradictory. The main reported features of asphaltenes that may influence their reactivity include:

1. The components comprising asphaltenes easily are condensed, sulfonated and oxidized.

2. Asphaltenes are highly active in cross-linking reactions.
3. Paramagnetism, low ionization potential and high electron affinity exhibited by asphaltenes affect their reactivity and their propensity to associate.
4. Asphaltenes tend to easily adsorb on the catalyst surface.
5. The shape of the aromatic fragments from asphaltene molecules allows the segregation of aromatic and paraffinic-naphthenic fragments during thermal treatment [211B319].

Changes in asphaltene structure during thermal processing are discussed by Simanzhenkov and Idem. Based on thermodynamics, they also evaluate the possibility of various asphaltene reactions. The possibility of deep cracking of bitumen or vacuum residues at low temperature is also discussed [211B314].

The reactivity of asphaltenes for hydrocracking depends upon their properties as shown for asphaltenes from three sources: mixed Arabian Light and Medium crude oil, Brazilian Marlim crude oil and Indonesian natural asphalt derived asphaltenes. Reactivity was determined by batch hydrocracking for three hours at 752-842°F (400-450°C) under hydrogen pressure (4.9-6.9 MPa initial pressure) with a palladium (6.4 wt%) and nickel (2.3 wt%) co-loaded Y-type zeolite catalyst. The order of reactivity was Indonesian natural asphalt derived asphaltene > mixed Arabian asphaltene > Brazilian Marlim asphaltene. By increasing the reaction temperature or by pre-treatment with tetralin or with a NiMo/alumina hydrogenation catalyst prior to hydrocracking, conversion of greater than 60% of the asphaltene to lighter products could be obtained (Table 5.15). The number-average molecular weight of the asphaltene strongly correlated with the reactivity. Total nitrogen content showed a weak correlation with reactivity. (Basic nitrogen was not tested.) The hydrogen/carbon ratio, carbon aromaticity, average size of the aromatic clusters and heteroatom content did not correlate with reactivity.

Table 5.15
HYDROCRACKING CONVERSION OF ASPHALTENES FROM THREE SOURCES

Asphaltene Source	Conversion, %	Temperature, °F (°C)
Indonesian natural asphalt	72	752 (400)
	87	797 (425)
Arabian Mixed Light/Medium crude oil	83	842 (450)
Brazilian Marlim crude oil	75	842 (450)

Source: 211B284

Following a similar procedure with heavy oil components of vacuum residue from Arabian crude oil but with a Y-type zeolite catalyst co-loaded with 3.3 wt% Pd and 3.6 wt% Ni, the deasphalted oil (propane soluble fraction) was the most reactive fraction with conversion to lighter products was as much as 90% at 662°F (350°C) and 4.9 MPa hydrogen initial pressure. Maltenes (propane insoluble but pentane soluble fraction) were less reactive, requiring slightly more severe conditions of 752°F (400°C) and 6.9 MPa hydrogen pressure for about 90% conversion. Asphaltene was the least reactive with less than 50% conversion at the reaction conditions of the maltenes [211B284].

Sulfur and Nitrogen

Generally, sulfides and thiophenes are the most dominant species in petroleum residue. In Athabasca bitumen pitch, thiophenes are the dominant sulfur species (about 65-80 wt% of total sulfur). Sulfide and mercaptan species are the balance. Catalytic hydrocracking removes most of the sulfide and mercaptans form the pitch feedstock, but hydrocracking is relatively ineffective for conversion of both thiophenes and sulfides in the heavy end cuts [211B018, 211B283].

The sulfur and nitrogen compounds in two commercial hydrocracker fresh feedstock components were characterized by Fourier Transform Ion Cyclotron Mass Spectrometry. The hydrocracker fresh feed consisted of about 20% light vacuum gas oil (LVGO), 65% heavy vacuum gas oil (HVGO) and 15% de-metallized oil (DMO) obtained from butane solvent deasphalted vacuum residue from Arabian Light crude oil. The approximate distillation ranges where: 347-1022°F (175-550°C) for LVGO, 572-1112°F (300-600°C) for HVGO and 752-1292°F (400-700°C) for the DMO. The bulk properties of the HVGO and DMO and the summary of sulfur and nitrogen containing species are summarized in Table 5.16.

Table 5.16
BULK PROPERTIES AND SUMMARY OF SULFUR AND NITROGEN SPECIES IN HVGO AND DMO

	Sulfur Species		Nitrogen Species	
	HVGO	DMO	HVGO	DMO
Bulk Properties				
Density, Kg/l	0.916	0.9716		
Nitrogen, ppmw	725	1655		
Sulfur, wt%	2.19	3.17		
Hydrogen, wt%	12.2	11.4		
Micro Carbon Residue, wt%	0.81	8.95		
C_5-insolubles, wt%	0.039	0.48		
Nickel, ppmw	<1	2		
Vanadium, ppmw	<1	8		
Sulfur or Nitrogen Types				

Table 5.16 (Concluded)
BULK PROPERTIES AND SUMMARY OF SULFUR AND NITROGEN SPECIES IN HVGO AND DMO

	Sulfur Species		Nitrogen Species	
	HVGO	**DMO**	**HVGO**	**DMO**
Mono	*778 Species*	*764 Species*	*476 Species*	*597 Species*
Carbon Atoms	17-48	22-50	23-49	26-56
DBE[a]	2-24	7-32	4-23	7-31
Aromatic rings	1 to 7	Up to 11	1 to 7	2 to 10
Di	*494 Species*	*606 Species*	*19 Species*	*59 Species*
Carbon Atoms	14-43	21-48	33-36	34-44
DBE	7-24	10-31	12-19	16-25
Aromatic rings	Up to 8	Up to 10	4 to 6	5 to 8
Tri	*59 Species*	*315 Species*		
Carbon Atoms	20-41	22-42		
DBE	10.5-21	14-29		
Thiophene aromatics	3-7	5-10		

Source: 211B115

[a] Double bond equivalent (DBE) is a measure of aromatic characteristics of a molecule defined as the number of hydrogen atoms lacking from an elemental composition compared to the corresponding saturated molecule with an otherwise identical number of carbon and heteroatoms. Every double bond or ring in a molecule reduces the number of hydrogen atoms by two. Examples: DBE of hexane is zero, cyclohexane is one and benzene is four.

The sulfur distributions show both blendstocks contained mono-, di- and tri-sulfur compounds. Surprisingly, di-sulfur species are most abundant in the DMO since the whole crude oil contains significantly higher ratio of mono-sulfur compounds compared to di-sulfur compounds. This indicates the di-sulfur compounds are concentrated in the DMO. The aromaticity as measured by DBE of the sulfur species correlates roughly linearly to the number of sulfur atoms per molecule: mono-sulfur species are less aromatic than the di-sulfur species, which in turn are less aromatic than di-sulfur species. The tri-sulfur species contain a high portion of carbon atoms contained in the aromatic rings with only a small number of carbon atoms in the alkyl substituents [211B115].

Both feedstock components contain a large number of mono- and di-nitrogen compounds consisting of mainly two types: basic pyridines and neutral pyrroles. Pyridine type structures poison hydrotreating and hydrocracking catalysts. Pyrrole type species are less reactive and require more severe conditions to be removed. Pyridine type aromatic species dominate both oils, with the DMO containing a significant amount of both types of nitrogen compounds that make it the more difficult to hydrocrack feedstock [211B115].

CHEMISTRY

The chemistry of resid and bitumen upgrading is extremely complex due in part to the complexity of the feedstocks and the number of thermal and catalytic reactions occurring. The hydrocracking catalyst is a bifunctional catalyst containing acidic sites and metallic sites. The acidic sites catalyze dehydrogenation, cracking, isomerization and dealkylation reactions. The metal sites catalyze hydrogenation, hydrogenolysis and isomerization.

Residue feedstock has high molecular weight (>>1000 average for vacuum residue) and contains high concentrations of heteroatoms (sulfur, nitrogen and metals being most common) and polynuclear aromatics (asphaltenes) that poison catalysts. Asphaltenes containing 3-4 aromatic rings are highly thermally stable. A substantial portion of residue molecules can be cracked off as fragments to become liquids in the transportation fuel and vacuum gasoil boiling ranges. When cracking asphaltenes at high conversion, thermodynamics favors formation of coke or sediments and light gases.

The product qualities of residues from hydrocracked Lloydminister crude in general were lower than the feed and deteriorated as the hydrocracking severity increased. Hydrocracking produced highly condensed aromatics. The product improvement occurred in the lighter fraction of the residue [211B021].

A study comparing the properties of virgin bitumen pitch with once-through coker and once-through hydrocracker residues tracked the transformation of sub-fractions of bitumen obtained by supercritical fluid extraction before and after upgrading. Hydrocracking is a lower severity process than coking. The H:C atomic ratio of the first 60 wt% of the hydrocracker bottoms is similar to the bitumen pitch, but the last 40 wt% is lower than that of the bitumen and the last 20 wt% has a similar H:C ratio as the coker residue, indicating the very heaviest fraction behaves the same way regardless of the conversion process. Hydrocracking is thus unable to increase the hydrogen content of the residue. Possible reasons for this are:

- The resid could be distinctly different from the lighter fractions of the feedstock and not susceptible to hydrogenation.
- The large size of the resid molecules may not be accessible to the active sites of the catalyst.
- Hydrocracking catalysts could be rapidly deactivated and loose hydrogenation activity.

The cracked asphaltene products remain in the residue boiling range (975°F+, 524°C+) in once-through hydrocracking and once-through coking. Hydrocracking appears to convert the heaviest fraction to coke precursors, which prolongs the coke formation process.

The conversion mechanism for reducing microcarbon residue, nitrogen and metals is similar to that of coking. Microcarbon residue distribution in hydrocracked residue is similar to the feed pitch and depends upon the depth of the residue, not the conversion process. The yield of coke did not correlate with the microcarbon residue content of the fractions. Coke yield was insignificant in the lower boiling fractions and high in the heaviest fraction. Sulfur in the lower boiling fraction of the pitch is converted; only a small sulfur reduction occurs in the heaviest fraction [211B021].

Reactions

Hydrocracking is a large network of reactions that occur simultaneously and often in competition with each other. Key reactions in the network, especially for heavy oils, are the reactions of the asphaltenes, multiple ring aromatics, naphthenes, paraffins as well as nitrogen and sulfur containing heterocyclic compounds. The chemistry of individual model reactions is

well studied. The challenge is to promote the optimum pathways in the network to promote the desired product slate as well as obtaining high product quality while maintaining long catalyst life. A catalyst system, for example, may be very effective converting long chain paraffins, but in the presence of multiple ring aromatics or heterocyclics, the rates of these reactions may be significantly depressed requiring catalytic or process strategies to handle their inhibitions. Furthermore, different reactions tend to occur in different sections of the hydrocracking reactors [211B186].

Hydrocracking chemistry is similar to thermal and fluid catalytic cracking combined simultaneously and sequentially with hydrogenation and heteroatom removal. The conversion of resid and heavy oils to lighter products is largely thermally driven whether or not hydrogen or a metal catalyst are present [211B021, 211B179].

The following chemical reactions are known to occur during the formation of distillates from bitumen molecules:

1. Homolytic cleavage of C-C bonds
2. Side chain cleavage (fragmentation)
3. Ring growth
4. Hydrogen transfer
5. Hydrogenation of aromatics/dehydrogenation of cycloparaffins
6. Ring opening
7. Heteroatom and metals removal [211B179].

The most important reaction is the cleavage of C-C bonds. Side chain cleavage and hydrogenation/dehydrogenation reactions are major routes in the thermal cracking of heavy oils and bitumen. Selective ring opening improves the ignition quality of middle distillate products. Heteroatom and metals cleaving reactions improve liquid product quality by removing sulfur, nitrogen and metals.

As discussed in the section below on mechanism for paraffin hydrocracking, hydrogen is intimately involved in the hydrocracking reaction network. Activated hydrogen can form Bronsted acid sites, saturate bonds, remove sulfur and nitrogen and inhibit coke formation by saturating coke precursors before they can condense and form coke.

The main function of the first bed or reactor in a hydrocracker is to clean up the fresh feedstock through hydrotreatment in order to remove metals and the more reactive sulfur and nitrogen compounds to protect the downstream hydrocracking catalyst. These reactions are rapid and occur near the top when the reactor is a fixed bed (Figure 5.1). Hydrotreating activity gradually diminishes during the catalyst cycle as metal (Ni, V, Fe, Si, As and others) accumulate on the catalyst. The concentrations of nitrogen and sulfur heterocyclics continue to diminish going down the reactor and are virtually eliminated in the effluent. Hydrogenation of multi-ring aromatics produces an increase in single-ring aromatics and two and three-ring naphthenes in the hydrotreated effluent. Isoparaffins and cracked products increase going down the reactor.

Figure 5.1
MOLECULAR EVOLUTION IN THE HYDROTREATING REACTOR [211B186]

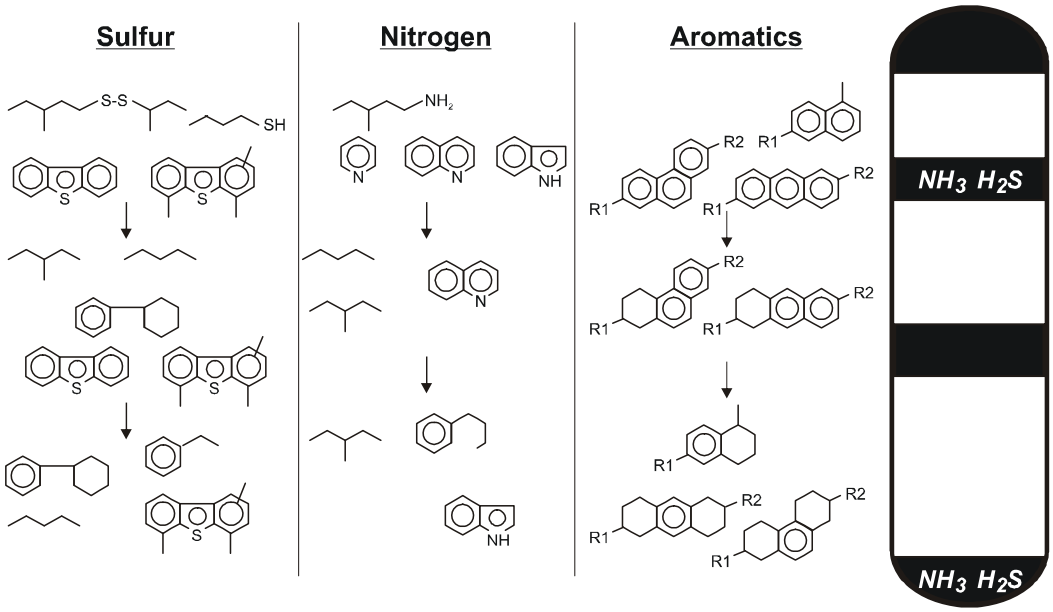

The feed to the hydrocracking catalyst is largely free of contaminants except refractory species. The predominant reactions are hydrogenation of aromatics, ring opening, dealkylation, isomerization and cracking of paraffins. For a fixed bed reactor, the reactions proceed as depicted in Figure 52. The composition of the product residue oil varies depending upon the feedstock and operating objectives. Refractory compounds concentrate in the residue product. When a second stage reactor is used, ammonia is greatly reduced, if present, and hydrogen sulfide is reduced in the recycle gas by water washing or amine scrubbing. The second stage catalyst is more active. Conversion is more favorable for the refractory compounds in the second stage [211B186].

Figure 5.2
MOLECULAR EVOLUTION IN THE HYDROCRACKING REACTOR [211B186]

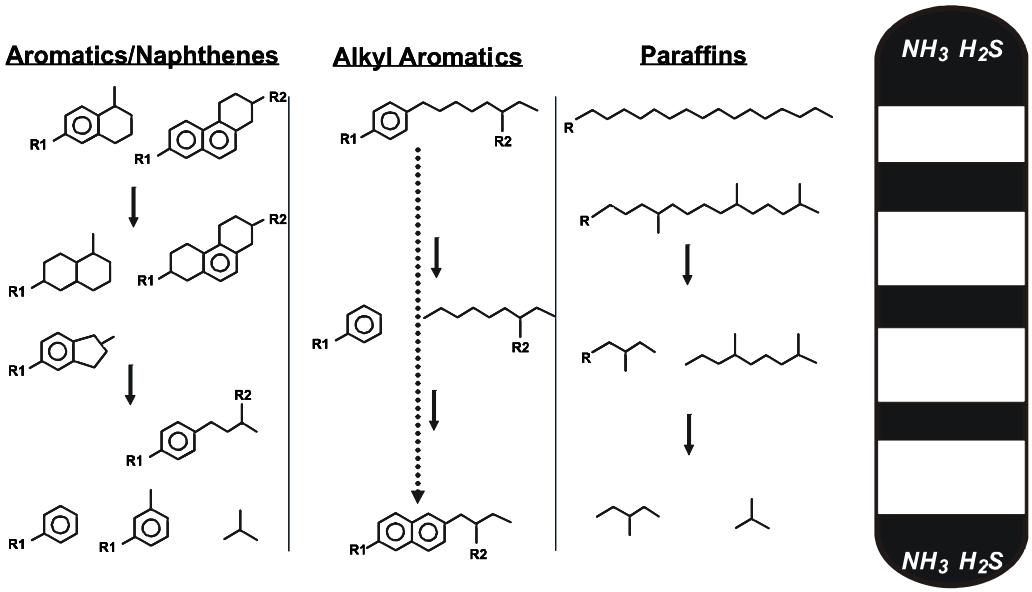

Thermal Hydrocracking

Thermal hydrocracking of vacuum bottoms of Athabasca bitumen between 788°F (420°C) and 860°F (460°C) showed that saturates and mono-and diaromatics are relatively unreactive, but the polyaromatics and resins are converted to smaller molecules including saturates. The aromatic fraction was the major component of the vacuum residues. Thermal hydrocracking of the polyaromatics fraction of vacuum bottoms obtained from Cold Lake crude oil in a batch autoclave showed the aromatic fraction decomposed to smaller molecules but also polymerized to form larger molecules and a small amount of coke (Table 5.17):

aromatics → resins → asphaltenes → coke

Table 5.17
THERMAL HYDROCRACKING OF POLYAROMATICS DERIVED FROM COLD LAKE VACUUM BOTTOMS

Products, wt%	788°F (420°C)	824°F (440°C)	842°F (450°C)
Gases	5.6	14.3	11
Asphaltene	6.0	9.5	12
Coke	0.7	0.5	0.3
Maltenes			
Saturates	10.3	15	21.7
Mono-diaromatics	8.4	9.8	9.1
Polyaromatics	57.8	33.1	41.6
Polars	11.2	17.7	4.6

Source: 211B179

The product polyaromatic fraction at each temperature had relatively lower molecular weight, shorter chains and was more aromatic.

Mechanism for Paraffins

The mechanism of paraffin hydrocracking over bifunctional catalysts is essentially carbonium ion chemistry of acid cracking coupled with metal catalyzed dehydrogenation-hydrogenation reactions.

On bifunctional catalysts, hydrocracking reactions proceed over the two distinctly different sites by two routes. In the first route, paraffins are first dehydrogenated to olefins on the metal (sulfide) sites. The olefin intermediates are then protonated at the acid sites, forming carbenium ions that subsequently skeletally isomerize, crack or alkylate. The products desorb from the acid sites as olefins, which on encountering metal sites are hydrogenated. In the second route, hydroconversion of hydrocarbon occurs on the acid reaction site, a certain distance from the metal site. Spill over hydrogen, a surface mobile activated hydrogen species, formed on a metal site migrates to an acidic site where the carbenium ion intermediate is hydrogenated by the spillover hydrogen and desorbed from the catalyst. Spill over hydrogen can donate an electron to the support to form a proton on Bronsted site and a hydride ion may form on a Lewis site during the process to balance the charge. An olefin formed on the metal site can react with the proton on the Bronsted site to form a carbenium ion, which may then combine with the migrated hydride ion from a Lewis site to produce a saturated product. Alternatively, the carbenium ion formed by protonation on the Bronsted site can migrate to a Lewis site and react with a hydride ion there [211B069].

Platinum and rhenium noble metals are known to promote hydrogen spillover. VGO hydrocracking activity and hydrodesulfurization activity of cobalt on high porous saponite catalyst are both improved when promoted with mixed platinum and rhenium. The noble metal combination improves the hydrogen spillover and reduced coke formation compared to unpromoted cobalt saponite [211B136].

The following elementary reaction steps were used to model the kinetics of heavy paraffin hydrocracking:

1. Dehydrogenation of paraffins to olefins on metal sites,
2. Protonation of olefins to carbenium ions on acid sites,
3. Carbenium ion hydride shift on acid sites,
4. Carbenium ion methyl shift on acid sites,
5. Protonated cyclopropane intermediate mediated branching of carbenium ion on acid sites,
6. Carbenium ion cracking through β-scission on acid sites,
7. Deprotonation of carbenium ions to olefins on acid sites, and
8. Hydrogenation of olefins to paraffins on metal sites [211B296].

Results of a C_{16} paraffin hydrocracking mechanistic kinetic model study show skeletal isomerizations precede the cracking reactions. β-scission of tertiary carbenium ions to other tertiary carbenium ions is fast, most likely to occur and leads to branched isomers. β-scission of secondary carbenium ions to tertiary carbenium ions is next fastest and produces normal isomers. β-scission of tertiary ions to secondary ions is slower and produces branched isomers. The slowest β-scission reaction is of secondary ions to secondary ions that produce normal

isomers. Normally all the cracked products come from the fastest two β-scission reactions cracking tri-branched isomers or di-branched isomers respectively [211B296].

Ring Opening

Selective ring opening improves the ignition properties of middle distillate products. For example, hydrogenation alone of naphthalene (cetane number of 5) to decalin only raises the cetane number to 35, but also cracking one ring raises the cetane number to 50 or 60 (Figure 5.3).

Figure 5.3
CETANE NUMBER IMPROVEMENT BY RING OPENING [211069]

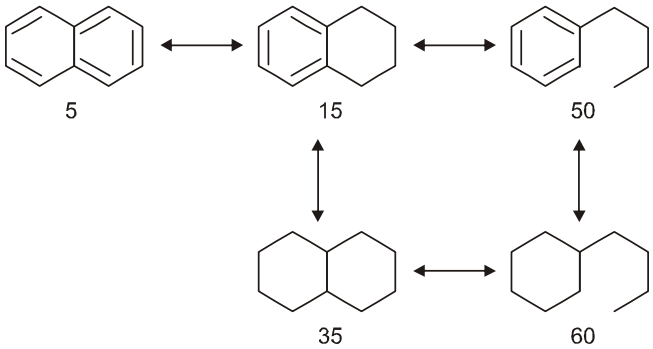

Ring opening reactions are complex and usually accompanied by hydrogenation, isomerization and cracking. Ring opening involves both the metal and acid sites of bifunctional catalysts and requires the high temperature, high pressure and hydrogen operating conditions. Commercial transition metal hydrocracking catalysts with acidic supports require severe operating conditions due to the low activities of their metal sulfide sites (compared to noble metal catalyst sites) causing extensive cracking of cycloparaffins side chains. Studies with model compounds show five member rings readily open on either acid or metallic catalysts with the selectivity depending upon the nature of the metal catalyst. Opening of six member rings requires the acidic function to first isomerize the six membered ring to a more reactive five member ring. For optimum ring opening, the metallic-acid functions of the catalyst must be balanced [211B069].

Activity and selectivity of bifunctional catalysts for ring opening is strongly dependent upon the properties of the catalyst and reaction conditions. The catalyst factors include: the type of metal, metal particle size, support acidity, support pore size and the interface length and strength balance between the metal and acid sites. Reaction conditions include the temperature and hydrogen pressure [211B069].

Networks of ring opening of multiple ring model compounds from single ring compounds to four ringed fluoranthene are discussed by Du et al [211B069]. We present the mechanism for fluoranthene (Figure 5.4) since it more closely resembles the asphaltene and other ring type structures found in heavy oils.

Figure 5.4
POSTULATED REACTION MECHANISM FOR FLUORANTHENE HYDROCONVERSION
[211B069]

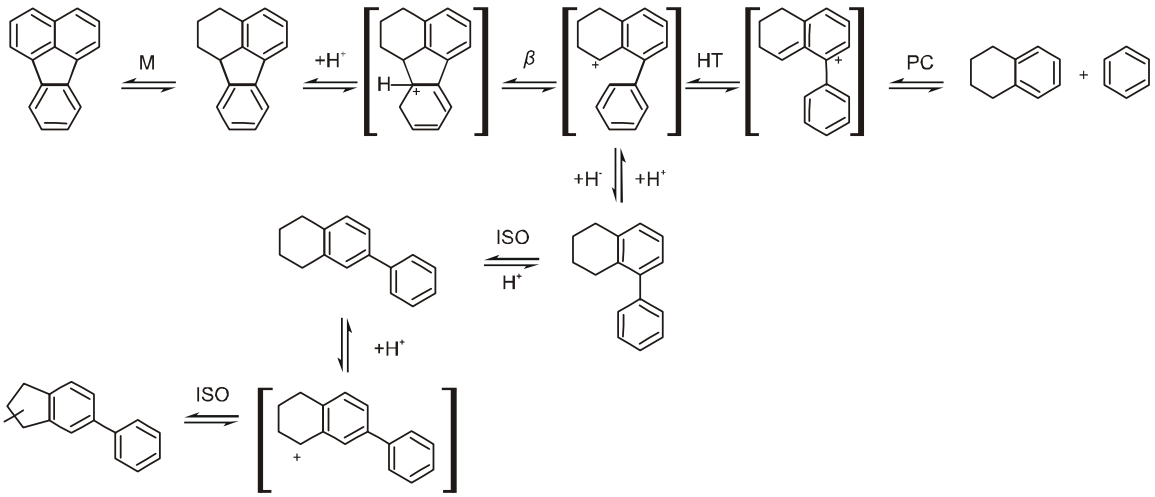

where M = metal site, β = β scission, HT = hydride transfer, PC = pyrolytic cracking and ISO = isomerization.

"Initial hydrogenation of fluoranthene on NiMo/zeolite Y yields tetrahydrofluoranthene as the major primary product, which is then converted by cracking and isomerization to produce mainly 1-phenyltetralin, 2-phenyltetralin, 2-phenlymethylindan, tetralin and benzene. Ring opening of the five-member ring of tetrahydrofluoranthene immediately followed the hydrogenation of fluoranthene due to its high ring strain. The formed 1-phenyltetralin can isomerize to the thermodynamically more stable isomer 2-phenyltetralin. 1-Phenyltetralin can recombine with a proton to form a carbenium ion, which rearranges to a more stable benzylic carbocation by 1,5- or 1,3-hydride transfer from the saturated ring. The latter is subject to a hydrogenolytic cleavage of the C-C bond between two aromatic rings to give tetralin and benzene. 2-Phenyltetralin, on the other hand, does not form benzylic carbocation because of unfavorable hydride transfer in this conformation. As a result, isomerization of 2-phenyltetralin took place, yielding 2-phenylindan." [211B069].

Mercaptan Recombination

H_2S can react with certain lighter hydrocarbons to form a mercaptan. The mercaptan recombination occurs in the reactor, effluent piping or downstream equipment while the effluent is still at high temperature. Conversion of mercaptans is related to the chemical equilibrium and is strongly influenced by the temperature. High temperature of the hydrocracker effluent favors the formation of mercaptan. Mercaptans can be removed from the whole effluent in a hydrotreater bed downstream of the hydrocracker where the temperature is lower and favors mercaptan conversion, such as the hot separator or a separate reactor.

The mercaptans formed are most serious for heavy naphtha (185-347°F, 85-175°C) where the amount of mercaptan can range from 1 ppmw to as much as 10 or 20 ppmw depending on

the amount of sulfur in the feed, the reactor outlet temperature and the catalyst. The sulfur can affect downstream catalytic reforming. Mercaptan can be removed from the naphtha by further hydrotreating in a naphtha hydrotreater ahead of the reformer [211B289].

Sediments and Heavy Polynuclear Aromatics

Hydrocracking of heavy residue feedstocks from heavy crude oils can form high molecular weight compounds called sediments, which cause many downstream operational problems such as blocking valves, pumps and hot or cold separators. Sediments are polynuclear aromatics that are formed by complex cracking, recombination and nucleation reactions among asphaltenes. Sediment formation in the H-Oil process is controlled through process and design, catalyst and operating conditions. Adding highly aromatic FCC slurry oil at a key point in the process peptizes the otherwise unconverted asphaltenes and reduces fouling rates characteristic of high conversion rates as well as upgrading the low value slurry oil into high quality diesel fuel [211B016, 211B176].

Sediment (or sludge) is a soft coke-like carbonaceous substance associated with high conversion hydrocracking of residual feedstocks. High operating temperatures promote sediment formation at high conversion, usually exceeding 60%. Sediment is a problem since it usually deposits on the reactor, rapidly deactivates catalyst, fouls transfer lines and accumulates in downstream separators, heat exchangers and fractionators. Eventually unit shutdown is forced for chemical or mechanical cleaning to remove the deposits. Antifouling chemical additives are sometimes added to the feedstock to suppress the formation of sediments. Sediments formation in residual oil hydrocracking and other conversion processes is caused by asphaltene insolubility and incompatibility in the product oils.

Sediments collected from an industrial hydrocracker processing vacuum residue from Kuwait export crude oil and from the same vacuum residue processed in a pilot plant hydrocracker were fractionated into four fractions by sequential solvent extraction. The industrial sediment, which was exposed to severe cracking and condensation reactions during prolonged exposure to high temperatures, was highly carbonized. Elemental characterizations of the whole sediments were compared to the vacuum resid's asphaltene properties in Table 5.18. The pilot plant sediment was rich in hydrogen and very low in metal content compared to the industrial sample. The pilot plant sample closely resembled the vacuum residue asphaltenes with slightly lower H:C atomic ratio (0.98 vs. 1.11), but higher than the industrial sample (0.59). Volatile material in the same boiling range as heavy gas oil was a large percentage, 55 wt%, of the pilot plant sediment. The industrial sample was highly carbonized, containing less than 20 wt% volatile and soluble matter. The metals indicate the industrial sample contains some catalyst fines carried over from the reactor. Structural characterization of the sediment showed a variety of polyaromatic structures with different degrees of condensation and alkyl substitution.

Table 5.18
ELEMENTAL AND METAL ANALYSIS OF SEDIMENTS AND VACUUM RESIDUE ASPHALTENES

	Industrial Sediment	Pilot Plant Sediment	Vacuum Residue Asphaltenes
Elemental Analysis[a], wt%			
Carbon	82.89	83.05	83.90
Hydrogen	4.05	7.07	7.80
Nitrogen	1.08	0.87	1.10
Sulfur	5.73	6.65	7.20
H:C ratio	0.59	1.02	1.12
Metals[b], wt%			
Vanadium	0.52	0.03	0.04
Nickel	0.24	0.02	0.01
Molybdenum	0.3	Not determined	Not determined
Iron	3.6	0.12	Not determined
Aluminum	1.6	0.03	Not determined

Source: 211B026

[a] Relative standard deviation: carbon, 1.7%; hydrogen, 0.9%; nitrogen, 1.7%; sulfur, 2.1%

[b] Relative standard deviation: 5%

The yields of the extract fractions are given in Table 5.19. The maltenes fraction, which is both toluene and n-heptane soluble, has a core pyrene structure surrounded by aliphatic groups. The asphaltenes and coke precursors fraction (toluene soluble, n-heptane insoluble) behaves as an intermediate phase and has a lower H:C ratio compared to the maltenes but a higher ratio than the residue. The asphaltenes contained shorter aliphatic chains and is more aromatic than asphaltenes in the vacuum residue feedstock. Aromaticity is between the maltenes and the vacuum residue. Only a small amount of the toluene insoluble, tetrahydrofuran soluble fraction occurs in either sample. The tetrahydrofuran insoluble fraction contains coke-like molecules having highly aromatic substructures repeatedly joined by short saturated carbon chains forming large polyaromatic sheets. The sheets are combined into clusters. The H:C ratio is particularly low, <0.6, and the aromaticity is very high, >0.8 [211B026].

Table 5.19
YIELDS OF SOLVENT DEFINED SEDIMENT FRACTIONS

Sediment Source	Industrial	Pilot Plant
Fraction, wt%		
Toluene soluble, n-heptane soluble (Maltenes)	16	38
Toluene soluble, n-heptane insoluble (Asphaltenes)	<1	31
Toluene insoluble, tetrahydrofuran soluble	1	3
Toluene insoluble, tetrahydrofuran insoluble	82	28
Recovery	99	100

Source: 211B026

Sediment formation can be reduced even at very high conversion levels, > 80%, by mixing aromatics rich gas oils with the vacuum residue feedstock. The diluents do not have any appreciable benefits in improving the yield of distillates and the extent of other hydrotreating reactions. The addition of aromatics rich diluents may improve the solubility of the asphaltene cores in the product oil and control the onset of sedimentation precipitation [211B101].

Heavy polynuclear aromatics (HPNAs) are by-products of hydrocracking reactions whose formation is a function of the feedstock, catalyst and reactor temperature. HPNAs concentrate in the nondistillable product. In a once-through hydrocracker, these compounds leave with the heaviest product. In recycle operations where the heaviest stream is recycled to the hydrocracker for further conversion, the concentration of HPNAs can build up to levels that cause problems: coking of catalyst and heavy product instability.

The highly aromatic HPNAs tend to be more soluble in highly aromatic oils such as FCC cycle light oil. However, hydrocracked oils tend to be more paraffinic and HPNAs precipitate more readily. Aromatics in hydrocracked oils are usually not present in sufficient amounts, the critical concentration, to maintain HPNA solubility. Temperature strongly affects the solubility of HPNAs. Precipitation of HPNAs has been observed in systems operating below about 392°F (200°C), most frequently the air cooled reactor effluent condenser where the temperature is below the precipitation point. Fouling of the cooler causes the outlet temperature to rise to a point where the condenser must be shutdown and cleaned, interrupting the unit's operation. The most common method to avoid fouling is to limit conversion in order to remove HPNAs with the heavy product, which must be produced at a rate (typically 3 to 10% of the fresh feed rate) sufficient to remove all HPNAs produced. A second method is to keep the reactor effluent above the precipitation temperature by using a hot separator to remove vapor from the liquid containing the HPNAs. The separator temperature is chosen to facilitate heat recovery in both the downstream cold separator heat exchange and the fractionator while keeping the HPNAs in solution [211B289].

Thermodynamics

The thermodynamic equilibrium for the major hydrocracking reactions are generally favorable (Table 5.20). Cracking, desulfurization and denitrogenation reactions are favored at typical hydrocracking operating conditions. An exception is aromatic saturation, which becomes thermodynamically limited at the high temperatures used towards the end of the catalyst life cycle

in fixed bed reactors to compensate for the loss in catalytic activity caused by accumulated coke. Thus complete aromatic saturation is not possible toward the end of run. Under the high hydrogen partial pressures used in hydrocrackers, the initial step in hydrocracking of paraffins or naphthenes, the formation of an olefin or cycloolefin, is unfavorable, especially for the smaller alkanes. However, the concentration of olefins or cycloolefins is sufficiently high and their conversion to carbonium ions sufficiently fast that the overall hydrocracking rate is not limited by the equilibrium olefin level. The overall hydrocracking reaction is exothermic; heat removal is a major factor in the process.

Table 5.20
THERMODYNAMICS OF MAJOR HYDROCRACKING REACTIONS

Reaction	Equilibrium	Heat of Reaction
Olefin Formation	Unfavorable but not limiting	Endothermic
Aromatic Saturation	Unfavorable at high temperature	Exothermic
Cracking	Favorable	Endothermic
Hydrodesulfurization	Favorable	Exothermic
Hydrodenitrogenation	Favorable	Exothermic

Source: 211B180

Thermodynamic equilibrium constants under hydrocracking conditions are discussed by Raseev who presents graphs of the constants for several compounds as functions of temperature and pressure. Constants for the following reactions are given:

- Hydrogenation of naphthalene to tetrahydro-naphthalene
- Hydrogenation of tetrahydro-naphthalene to decahydro-naphthalene
- Hydrogenation of butyl-benzene
- Hydrodecyclization of amyl-cyclopentane and of butyl-cyclo hexane
- Hydrodecyclization of decahydro-naphthalene to butyl-cyclohexane and tetra hydro-naphthalene to butyl-benzene
- Hydrodecyclization of pentahydro-naphthalene to nonahydro-benzene [211B295].

The bond dissociation energies of the most common bonds found in residual oils are listed in Table 5.21. Under non-selective thermal hydrocracking, the weakest bonds are the first to break. The sulfide (C-S) bond is the weakest and breaks under reaction conditions of moderate severity. This is postulated to be the first step in thermal hydrocracking of heavy oils. The C-C bond dissociation energy can vary depending upon the type of molecule. The C-C bond cleavage is believed to proceed through a free radical chain reaction mechanism.

Table 5.21
BOND DISSOCIATION ENERGIES

Bond	Kcal/mole
H-H	103
C-H	96-99
C-C	83-85
C=C	146-151
Ar-CH_2-CH_2-Ar	71
Ar-H	111
C-S	66
C-N	69-75
N-H	93
S-H	82
O-H	110-111

Source: 211B179

The heat of reaction for reactions occurring during hydrocracking are listed in Table 5.22. Isomerization reactions produce a small amount of heat that can be neglected.

Table 5.22
HYDROPROCESSING REACTIONS AND ENTHALPY OF REACTION

Reaction Type	Illustration[a]	ΔH_R[b]
Minimal C-C Bond Breaking		
Hydrodesulfurization (HDS)	R-S-R' + $2H_2$ → RH + R'H + H_2S	-2.5 to -3.0
Hydrodenitrogenation (HDN)	R=N-R' + $3H_2$ → RH + R'H + NH_3	-2.5 to -3.0
Hydrodeoxygenation (HDO)	R-O-R' + $2H_2$ → RH + R'H + H_2O	-2.5 to -3.0
Hydrodemetallation (HDM)	R-M + ½H_2 + A → RH +M-A	-3
Saturation of aromatics	$C_{10}H_8$ + $2H_2$ → $C_{10}H_{12}$	-3
Saturation of olefins	R=R' + H_2 → HR-R'H	-5.5
Isomerization	n-RH → i-RH	n/a
Significant C-C Bond Breaking		
Dealkylation of aromatic rings	Φ-CH_2-R + H_2 → Φ-CH_3 + RH	-1.3 to -1.7
Opening of naphthene rings	Cyclo-C_6H_{12} → C_6H_{14}	-1.3 to -1.7
Hydrocracking of paraffins	R-R' + H_2 → RH + R'H	-1.3 to -1.7
Other Reactions		
Coke formation	2ΦH → ΦΦ + $2H_2$	+3
Mercaptan formation	R=R' + H_2S → HS-R-R'H	-3

Source: 211B181

[a] R = alkyl; Φ = aromatic; M = Fe, Ni or V; A = metals adsorbing material.

[b] Kilojoules per standard m^3 of H_2 consumed, negative for exothermic reactions.

Saturation of olefins is practically irreversible while aromatics is a reversible reaction. Below about 700°F (370°C), hydrogenation reactions dominate and the extent of saturation increases as temperature increases. The reactions are not at equilibrium but are governed by kinetics as indicated by the naphthene-to-aromatic ratio (N:A) of the reactor effluent being greater than the N:A ratio predicted by thermodynamic calculations. Above about 740°F (393°C), the dehydrogenation reaction become more important as equilibrium limits begin to compete with kinetic limitations. The crossover temperature where the N:A ratio of the reactor effluent begins to decrease with increasing temperature depends upon the feed composition, catalyst type and reaction conditions, especially hydrogen partial pressure. The crossover point affects important product properties such as the kerosene smoke point and the cetane rating of diesel fuel [211B181].

Kinetics

An extensive review of the literature on kinetic modeling of heavy petroleum hydrocracking to 2005 by Ancheyta etal. includes models based on lumping species, continuous mixtures, structure oriented lumping and single event models. In some cases when experimental data are present in the original publication, the kinetic parameters are re-estimated and some differences are found compared to the originally reported values. Most of the feedstocks are vacuum gas oils. Each type of model has different capabilities [211B025].

Lumped models are the oldest type of model and have the advantage and disadvantage of simplicity in predicting product yields. Their dependency on feed properties and the use of an invariant distillation range of products, which if changed, necessitates further experimental and parameter estimation, are the main disadvantages. The complexity of real heavy feedstocks suggests lumped models will continue to be used for modeling their hydrocracking kinetics.

Models based on continuous mixtures consider properties of the reaction mixture, the underlying pathways and the associated selectivity of the reactions. The true boiling point temperature is the parameter of characterization. However, the model is still dependent upon the feed properties. Also, distillation curves present difficulty for analyzing heavy oils since the initial and final boiling points are not accurately known (for this reason, 10% and 90% boiling points are commonly used instead).

Structure oriented lumping models express the chemical reactions in terms of typical molecular structures. This type of model describes reaction kinetics in terms of relatively large number of pseudocomponents, essentially a type of lumping. Rate parameters are still dependent upon feedstock properties.

The single event approach uses a limited number of types of elementary steps of cation chemistry involving series of homologous species. Transition state theory and statistical thermodynamics form the basis of the models. Benefits include reducing the number of rate coefficients to be determined. However, detailed and sufficient experimental data are necessary [211B025].

The kinetics of hydrocracking residue from Maya crude oil were reported by Callejas and Martinez using first order kinetic scheme involving three lump species: atmospheric residue (650°F+, 343°C+), light oils (650°F-, 343°C-) and gases. In this scheme, atmospheric residue cracked directly either to light oils or to gases. Test conditions are: 12.5 MPa hydrogen pressure; 707°F (375°C), 752°F (400°C) and 779°F (415°C) and WHSV in the range of 1.4-7.1 $l/g_{cat}H$. The authors used linear regression to individually estimate the constants and reported the data at the lower temperatures were in agreement ($r>0.82$), but the data at 779°F (415°C) poorly fit ($r<0.70$)

the proposed model. Ancheyta etal. recalculated the constants (Table 5.23) using minimization of the sum of square errors between experimental and calculated yields. The recalculated constants satisfy the condition that $k_0 = k_1+k_2$ and the sum of square errors for values of the kinetic constants are less than for the original values. The recalculated activation energies are lower but more accurate than originally reported [211B025, 211B234].

Table 5.23
RATE CONSTANTS FOR HYDROCRACKING OF MAYA ATMOSPHERIC RESIDUE

	707°F (375°C)	752°F (400°C)	779°F (415°C)	EA, kcal/mol
k_0 (atmospheric resid conversion)				
Original value	1.13	3.26	9.20	45.32
Recalculated value	1.09	3.18	7.22	41.32
k_1 (light oils formation)				
Original value	0.07	0.25	1.52	64.40
Recalculated value	0.30	0.46	1.45	32.57
k_2 (gases formation from atmospheric resid)				
Original value	0.21	1.5	5.12	70.43
Recalculated value	0.79	2.72	5.77	43.90

Source: 211B025

The relative reaction rates of n-paraffins increases with increasing carbon number:

Carbon Number	Relative Rate
C_5	1
C_{10}	32
C_{15}	72
C_{20}	120

Source: 211B181

Relative reaction rates for hydrocracking reactions (Figure 5.5) for different classes of compounds are shown in Table 5.24 for 716°F to 842°F (380°C to 450°C). Negative relative rates indicate the reverse reaction is faster than the corresponding forward reaction.

Figure 5.5
HYDROCRACKING REACTION CHAIN FOR POLYAROMATICS AND NAPHTHENO-AROMATIC COMPOUNDS [211B181]

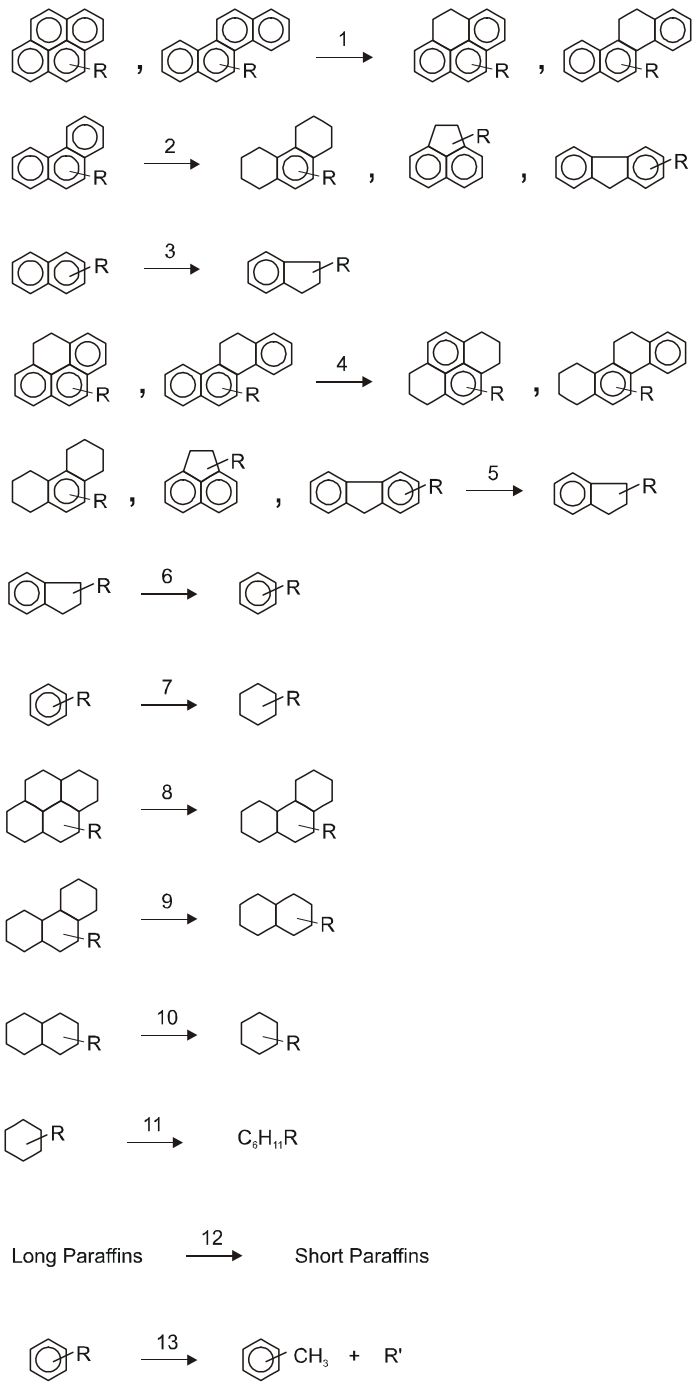

Table 5.24
RELATIVE REACTION RATES FOR GROUPS OF HYDROCRACKING REACTIONS SHOWN IN FIGURE 5.5

Figure 5.5 Reaction Number	Reaction/ Products	Reaction Type	Relative Reaction Rate at: 716°F 380°C	752°F 400°C	797°F 425°C	842°F 450°C
1	Pyrenes, chrysenes/ Polybenzonaphthenes	Saturation	---	---	---	---
2	Phenanthrenes/ Dinaphthenobenzenes, acenaphthenes, fluorenes	Saturation	---	---	---	---
3	Naphthalenes/ Indanes	Saturation	0.6	0.5	0.5	0.5
4	Polybenzonaphthenes/ Dinaphthenobenzenes, acenaphthenes, fluorenes	Saturation	---	---	---	---
5	Benzonaphthenes/ Dinaphthenobenzenes, acenaphthenes, fluorenes	Saturation	3.7	3.0	2.6	2.4
6	Indanes/Alkybenzenes	Ring Opening	4.2	3.5	3.4	3.2
7	Alkybenzenes/Single-ring naphthenes	Saturation	4.5	2.4	0.3	-0.8
8	Polycyclic naphthenes/ Three-ring naphthenes	Ring Opening	1.0	1.0	1.0	1.0
9	Three-ring naphthenes/ Two-ring naphthenes	Ring Opening	1.1	1.6	1.9	2.1
10	Two-ring naphthenes/ Single-ring naphthenes	Ring Opening	1.3	1.7	2.7	3.1
11	Single-ring naphthenes/ Paraffins	Ring Opening	0.9	-1.8	-2.8	-3.2
12	Long paraffins/ Short paraffins	Cracking	0.3	2.1	3.3	3.8
13	Alkylbenzenes/ Methyl benzenes, paraffins	Cracking	2.2	2.9	3.4	4.1

Source: 211B181

Using computer algorithms that not only solved but also formulated the model, Klein and Hou developed a mechanistic kinetic model of heavy paraffins hydrocracking for up to 80 carbon numbers. The model applies to bi-functional (acid and metal functions) catalysts. The model was successfully demonstrated for C_{16} paraffin hydrocracking, which involved 465 species and 1503 reactions in the mechanism. For this feed, the optimized model results agreed excellently with experimental yields over a wide range of operating conditions, showing that the fundamental nature (feedstock and catalyst acidity independent) of the rate parameters in the model. A generalized isomorphism algorithm was then applied at the carbon and branch number level to

reduce the complexity and explosion of parameters. The resulting model for C_{80} paraffin hydrocracking contained 306 species and 4671 reactions at the pathways level [211B296].

In the kinetic modeling of a hydrogenated gas oil hydrocracking, Martens and Marin previously used a computer algorithm to generate the detailed reaction network in which each species was represented by a boolean relationship matrix. "The kinetic rate coefficient of each elementary step was expressed as a multiple of single event rate coefficients, with the number of single events being related to the global symmetry of reactant and transition state of the elementary steps." Due to the enormous complexity of the reaction network and the lack of a sufficiently detailed feedstock analysis, relumping of the reaction network was done while retaining the fundamental character of the kinetic parameters involved. The model was incorporated into an adiabatic multiphase fixed-bed reactor model. For gas oil, the model showed gas-liquid transfer as well as diffusion inside the catalyst pores occurs at a rate potentially much higher than that of the acid catalyzed reactions at the conditions modeled [211B139].

The effect of pressure on the kinetics of moderate hydrocracking heavy oil were determined from pilot plant data using commercial NiMo catalyst that was crushed to minimize intraphase mass transfer resistances. Operating conditions were 6.9-9.8 MPa, 5000 ft^3 H_2/B, 716-78°F (380-420°C) and 0.33-1.5 H^{-1} LHSV. A kinetic model was developed that contained 5 lumps (residue, vacuum gas oil, middle distillates, naphtha and gases) and 10 rate constants. Second order kinetics for the residue hydrocracking with first order reactions for the other paths fit the data. (The model but with all first order kinetics applied at constant pressure is discussed in [211B097].) Pressure and temperature effects were expressed by a modified Arrhenius equation:

$$k = A \exp(-E_A/RT)(P/P_0)^{\beta}$$

where E_A and A are the Arrhenius parameters, P_0 is a reference pressure and β is a pressure-dependent parameter. Experimental values for the range of 6.9-9.8 MPa were: E_A = 53.2 kcal/mol, ln A = 35.23 and β = 1.2343. Calculated product compositions were within an average error of <5% compared to experimental values for hydrocracking of Maya crude oil. Since the reactor pressure is lower than in many commercial high severity reactors, the kinetic parameters may require adjustment to be applicable to other high-pressure applications [211B031].

The kinetics of thermal hydrocracking Chinese Gudao vacuum residue were determined over the temperature range of 734-815°F (390-435°C) using a traditional kinetic model and a new model that gave results consistent with the old model. The new model allows the calculation with a minimum of three tests, each at a different temperature [211B091].

Slurry hydrocracking of vacuum residue from Ural crude oil using a NiMo on alumina catalyst crushed to less than 0.06 mm (260 m^2/g surface area and an average pore diameter of 7.4 nm) was conducted in a continuous laboratory reactor that circulated the liquid and operated under isothermal conditions. Catalyst concentration was 1 wt%; concentrations up to 10 wt% had little effect on vacuum residue conversion, which was a constant 62% at 806°F (430°C), nor on asphaltene or carbon residue conversion. However, desulfurization increased from 70% to 88% with increased catalyst concentration from 1 wt% to 10 wt%. Any increase in coke production with decreased catalyst concentration was too small to be detected. Liquid hourly space velocity was 0.5 H^{-1}. Hydrogen (16 MPa) was in "huge" excess (50 times the stoichiometric consumption). Vacuum residue conversion increased nearly linearly from 27.8% at 770°F (410°C) to 92.7% at 842°F (450°C). Sulfur conversion increased from about 52% at 770°F (410°C) to 91% at 842°F (450°C) [211B087].

Vacuum residue conversion, asphaltene conversion, hydrodesulfurization and Conradson carbon residue reduction were modeled as whole groups of chemical reactions and not single and specific reactions. First order kinetics were used with the effect of temperature represented

by the Arrhenius equation. The average rate constants for these reactions are summarized in Table 5.25 along with the activation energy.

Table 5.25
REACTION RATE CONSTANTS AND ACTIVATION ENERGIES FOR REACTIONS DURING HYDROCRACKING OF URAL VACUUM RESIDUE

	Rate constants, k, min^{-1}			Activation Energy, kJ/mol
	770°F (410°C)	788°F (420°C)	806°F (430°C)	770-806°F (410-430°C)
Vacuum residue conversion	0.0277	0.0317	0.0343	86.9
Hydrodesulfurization	0.0329	0.0343	0.0355	37.4
Conradson carbon residue reduction	0.0249	0.0289	0.0319	109.4
Asphaltene conversion	0.0219	0.0279	0.0316	135.4

Source: 211B087

The activation energy for hydrodesulfurization is relatively low, indicating a high activity of the catalyst for this reaction and a relatively low influence of temperature on the reaction. The higher activation energies of the other reactions indicates relatively lower catalytic activity, a lower rate of reaction and stronger effects of temperature [211B087].

Fukuyama and Terai modeled the hydrocracking of vacuum residue (5.3 API, 4.02 wt% sulfur, 0.53 wt% nitrogen, 22.4 wt% Conradson carbon residue, 6.9 wt% nC_7 insoluble asphaltenes, 180 ppmw vanadium and 53 ppmw nickel) with a seven lump reaction model. Two slurried catalysts were pyrites or mixed pyrites and activated carbon. Three lumps represented the products; four lumps represented the feedstock. The gas, naphtha, kerosene and gas oil products were lumped together in one lump (the Lo lump). Vacuum gas oil (VGO lump) and coke were separate lumps. The vacuum feedstock is represented by its saturates (the Satu lump), aromatics (the Aroma lump), resins (the Resin lump) and asphaltene (the Asp lump) SARA components. The concentration change of the feedstock SARA lumps was assumed to account for the decrease in the high initial rate constants as the reaction progressed. Figure 5.6 shows the reaction model [211B068].

Figure 5.6
SEVEN LUMP KINETIC REACTION MODEL FOR HYDROCRACKING VACUUM RESIDUE FEEDSTOCK [211B068]

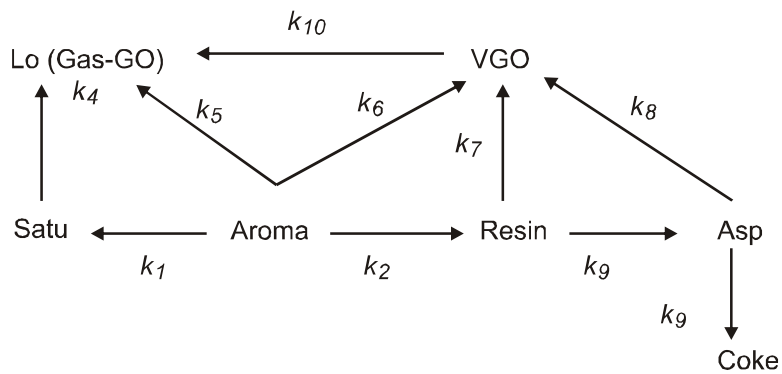

The reaction rate constants were calculated from the following differential equations that describe the model:

Satu: $dx_1/dt = k_1x_2 -- k_4x_1$

Aroma: $dx_2/dt = -- (k_1 + k_2 + k_5 + k_6)x_2$

Resin: $dx_3/dt = -- (k_3 + K_7)x_3 + k_2x_2$

Asp: $dx_4/dt = -- (k_8 + k_9)x_4 + k_3x_3$

Lo: $dx_5/dt = k_4x_1 + k_5x_2 + k_{10}x_6$

VGO: $dx_6/dt = -- k_{10}x_6 + k_6x_2 + k_7x_3 + k_8x_4$

Coke: $dx_7/dt = k_9x_4$

The rate constants, activation energy (E_a) and frequency factor (A_0) are shown in Table 5.26 [211B068].

Table 5.26
RATE CONSTANTS AND KINETIC PARAMETERS FOR HYDROCRACKING OF VACUUM RESIDUE OVER SLURRIED PYRITE CATALYST AND SLURRIED MIXED PYRITE AND ACTIVATED CARBON CATALYST

Temperature	688°K	708°K	718°K	Ea, kJ/mol	ln A0, H^{-1}
Pyrite Catalyst					
k_1, $x10^{-3}$/H	4.76	16.6	30.3	253	43.09
k_2, $x10^{-3}$/H	0.0135	0.0141	0.0146	10	-5.31
k_3, $x10^{-3}$/H	0.00354	0.634	7.62	1,050	175.25
k_4, $x10^{-3}$/H	18.2	46.5	72.7	189	33.21
k_5, $x10^{-3}$/H	0.796	5.67	14.5	397	66.48
k_6, $x10^{-3}$/H	0.0244	3.45	3.71	1,002	168.85
k_7, $x10^{-3}$/H	5.42	16.6	28.3	226	38.43
k_8, $x10^{-3}$/H	0.00484	0.130	0.632	667	108.47
k_9, $x10^{-3}$/H	0.0356	4.23	41.8	967	163.00
k_{10}, $x10^{-3}$/H	0.709	7.11	21.5	467	78.46
Mixed pyrite, activated carbon catalyst					
k_1, $x10^{-3}$/H	0.00884	0.0118	0.0125	47	0.78
k_2, $x10^{-3}$/H	0.0149	0.0154	0.0157	7	-5.80
k_3, $x10^{-3}$/H	0.0122	0.0137	0.0145	24	-3.05
k_4, $x10^{-3}$/H	0.0141	1.27	10.9	910	152.10
k_5, $x10^{-3}$/H	4.68	19.5	38.7	289	49.33
k_6, $x10^{-3}$/H	0.0140	0.0149	0.0154	13	-4.82
k_7, $x10^{-3}$/H	4.65	13.6	22.8	217	36.77
k_8, $x10^{-3}$/H	0.0124	0.0129	0.0131	7	-5.93
k_9, $x10^{-3}$/H	0.0157	0.912	6.39	822	136.81
k_{10}, $x10^{-3}$/H	1.29	4.28	7.61	243	40.01

Source: 211B068

CATALYSTS

Hydrocracking catalysts are bifunctional catalysts, composed of hydrogenation-dehydrogenation catalyzing metals on an acidic catalytic cracking support. Hydrogenation function (at low sulfur conditions) increases in the order: Ni/Mo < Ni/W < Pt/Pd. Support acidity increases in the order: alumina < halogenated alumina < silica-aluminas < zeolites. Generally nickel-molybdenum or nickel-tungsten based catalysts supported on gamma alumina and

amorphous silica-alumina are used as the first hydrocracking catalyst for feedstock pretreatment. Phosphorus is added to promote hydrodenitrogenation activity [211B298].

Alumina, although the least active for cracking even when fluorinated, is an excellent support for the hydrotreating function and is used when hydrocracking high nitrogen feedstocks. Amorphous silica aluminas are more acidic, but are considered to have a rather small number of high strength acid sites. Silica-alumina's hydrogenation metal dispersion power changes with alumina content as does the acidity, which increases with alumina up to 25 wt%. Beyond 25 wt%, acidity decreases. Zeolites provide the highest cracking activity and are more stable than amorphous silica-aluminas in commercial operation. However, mass transfer limitations lead to lower selectivities to desired products and/or increased gas make. Zeolite Y has been used in almost all commercial hydrocracking catalysts. Others tried include: zeolite L, mordenite, zeolite omega in the late 1960's and later zeolites X, beta and ZSM-5. Zeolite Y has the widest pores, but still has access problems for the higher boiling molecules. Sometimes amorphous silica-alumina, which does not have diffusion limitations, is added to convert molecules too large for the zeolite [211B298].

Zeolite Y can be modified, usually by a combination of steaming, calcination, ion-exchange or leaching processes. By these dealumination methods, the amount of aluminum located at the framework's tetrahedral sites, which are the primary Bronsted acid sites, and the amount of extra-framework aluminum is controlled during manufacture. The amount of aluminum located in the tetrahedral sites primarily, but not exclusively, determines the concentration and strength of the acidic sites. Mesopores are created that allow larger molecules to be cracked and that can increase the selectivity to middle distillate. These methods allow the zeolite Y to be fine tuned for the number and distribution of acid sites, their intrinsic acidity and distribution and accessibility while preserving a high degree of crystallinity [211B298].

Hydrocracking catalysts performance is measured by four key criteria:

- Initial activity – measured by the temperature required to obtain the desired product at the start of run.
- Stability – measured by the rate of increase of temperature required to maintain conversion.
- Selectivity – the ability of the catalyst to produce the desired product distribution.
- Quality of product – the ability of the catalyst to produce products meeting product specifications [211B180].

Recent hydrocracking catalysts developments include balancing high activity and high selectivity while meeting product quality specifications and minimizing hydrogen consumption [211B300]. Catalysts are reviewed in [211B061].

Mechanism

Hydrocracking catalysts, being a bifunctional catalyst, function by hydrotreating catalysis for the metal sites and by cracking catalysis for the acid sites with hydrogen spillover between sites. For hydrocracking residual oils, in addition to appropriate acidity for mild cracking and high hydrogenation activity to avoid coking, mesopores are required for diffusion of asphaltenes and other large molecules to the active sites [211B081].

Conventional hydrocracking catalysts usually contain molybdenum promoted by either cobalt or nickel. Gamma alumina is a support, but silica-alumina and zeolites have higher acidity that enhances cracking. On the support, molybdenum is sulfided (MoS_2) and present as slabs whose corner and edge sulfur ions can be readily removed to form coordinatively unsaturated

sites (CUS) and/or sulfur ion vacancies that have Lewis acid character. Double or multiple vacancies can form. The Lewis character of CUS can adsorb molecules with unpaired electrons such as pyridine. Promoters (Co or Ni) locate at the edge sites of the slabs and make the CUS considerably more active than unpromoted sites. Apparently, the CUS activate hydrogen leading to the formation of Mo-H and –SH groups through homolytic and heterolytic splitting of the hydrogen molecule. These groups supply the hydrogen for hydrogenation reactions. Adsorption of contaminants such as nitrogen may slow down the hydrogen activation process and poison the catalyst [211B061].

The chemical composition and porosity of the support both affect the catalyst performance. Additives such as phosphate, fluoride or boride can modify alumina and improve catalyst hydrocracking activity from improvement of acidic sites distribution. Conversion of asphaltenes and resins improves. However, more acidic supports adversely affect other catalyst functions. The activity of the catalyst for heavy feedstocks must be optimized to achieve the desired cracking and demetallization, desulfurization and denitrogenation. [211B061].

The effect of mesopores was demonstrated with two zeolite catalysts. Two NiMo/HY zeolite catalysts differing essentially in the amount of mesopores possessed similar micropores and micropore structure: micropore surface area, micropore volume, framework silicon:aluminum ratio, and Bronsted acidity. For both catalysts, the majority of the NiMo sulfides were dispersed inside the micropores of the zeolites. The rest of the NiMo sulfides were dispersed on the surface inside the mesopores of the mesopore catalyst and on the external surface of the zeolite of the catalyst without many mesopores. When hydrocracking tetralin, no significant difference in catalytic activities of the two catalysts was observed. When cracking an atmospheric resid (0.983 g/cm^3, 4.22 wt% sulfur, 0.27 wt% nitrogen, 7.70 wt% asphaltenes, 29 ppm nickel and 92 ppm vanadium), the catalyst with mesopores showed superior performance compared to the catalyst without mesopores in the yields of middle or light distillates and heteroatom removal. Gas production in both catalysts was similar. These results indicated the mesopores are important in hydrocracking of heavy oils, whereas the micropores are important for gas production [211B124].

Optimum pore diameter and volume distribution are critical for maximizing catalyst activity for high metal feedstocks. Nickel and vanadium are found in large diameter porphyrin molecules. The optimum may be different for different feeds and catalysts. With heavy feeds, diffusion is a limiting factor with small pores while moderate sized pores gradually become deactivated by pore mouth plugging by metals. However, catalysts with small surface area and large pore volume have a lower concentration of active sites and are less active. They are more resistant to pore mouth plugging and have a higher capacity for metals. Bimodal size distribution catalysts, which contain different fractions of micro, meso and macro pores, can be tailored to the feedstock. Bimodal, and even polymodal catalysts, have a larger metals storage capacity and longer life than unimodal catalysts. The radial distribution of metals is more uniform on bimodal catalyst compared with microporous unimodal catalyst [211B061].

Pore size alone has been insufficient to prevent diffusion problems during processing of heavy feedstocks. Size and shape of the catalyst particle is also important. Volume near the center of large particles may not be utilized even for macroporous polymodal catalyst. Decreasing the diameter helps to a certain extent, but a limit is approached, about 0.8 mm (1/32 in), after which particle strength is too low and the particle disintegrates. For fixed bed reactors, small particles create large pressure drops. The problem may be solved by selection of the particle shape. For the same catalyst composition and structure, activity depends upon the particle size and shape. Defining size as the ratio of external particle volume (V_p) and geometric surface area (S_p), the hydrodesulfurization activity for heavy oil at constant catalyst weight (Table 5.27) shows that activity improves with decreasing particle size.

Table 5.27
EFFECT OF PARTICLE SIZE AND SHAPE ON HYDRODESULFURIZATION ACTIVITY

Shape	Dimensions[a], mm	V_p/S_p, mm	Activity
Cylinder	0.83 o.d. x 3.7 L	0.189	9.7
Cylinder	1.2 o.d. x 5.0 L	0.268	7.9
Cylinder	1.55 o.d. x 5.0 L	0.345	5.7
Ring	1.62 o.d. x 0.64 i.d. x 4.8 L	0.233	8.7
Ellipse	1.9 o.d. x 1.0 i.d. x5.0 L	0.262	8.4
3-Lobe	1.0 o.d. x 5.0 L	0.295	8.2
Crushed	0.25-0.45	~0.04	14.0

Source: 211B061

[a] o.d.: outside diameter, i.d.: inside diameter, L: length.

Mechanical strength is essential for a hydrocracking catalysts, whether a fixed bed or an ebullated bed catalyst. For fixed beds, crack strength is important whereas ebullated beds require good attrition resistance. Cracking leads to high pressure drop over the fixed bed, channeling caused maldistribution of feed and even collapse of the bed. It is more difficult to maintain mechanical strength for macroporous catalysts than for microporous catalysts. Mechanical strength is controlled during preparation by the selection of the binder, using an optimal temperature and duration during calcination as well as the method of addition of metals [211B061].

Commercial Catalysts

Designing catalysts for heavy oil hydrocracking involves understanding the interaction of many factors to control the reaction pathways to achieve today's product requirements. The major catalyst properties include the acid and metal functions and the substrate porosity. Process considerations include the reactor flow scheme, hydrotreating severity, hydrocracking severity, temperature, pressure and hydrogen availability. The goal is to stop reactions at the desired products and prevent further cracking that often results in forming low value light ends and reduced liquid yield. Control of the sequence is accomplished by selection of catalyst properties such as strength and distribution of acid sites and tailoring the metal hydrogen activity to balance the acidity. Elimination of diffusion restraints with heavy oils is achieved by control of substrate pore size and pore geometry of the catalyst. Catalyst porosity can be altered by the use of an amorphous substrate alone or mixed with zeolite. Synthesized zeolite can be treated to create larger mesopores and to adjust its acidity and stability. Catalyst may also be matched to the reactor environment including the recycle gas composition and reactor pressure [211B186].

Y zeolite catalysts advantages over amorphous silica-alumina catalysts include: high activity, low coke formation, high resistance against nitrogen compounds and high regenerability. The inability of large molecules to diffuse into 0.74 nanometer micropores is an intrinsic problem of zeolite catalysts. However, through ion exchange and dealumination, mesopore surface area can be created [211B124].

Commercial catalysts for heavy oil hydrocracking and mild hydrocracking are listed in Table 5.28. Most are Ni-Mo catalysts. Bulk density and support materials are proprietary. Additional hydrocracking catalysts are available for heavy VGO.

Table 5.28
COMMERCIAL HEAVY OIL HYDROCRACKING CATALYSTS

Catalyst Designation	Primary Differentiation Characteristics	Application Feedstock	Application Product	Form	Bulk Density Compacted (lb/cu ft, g/cc*)	Carrier Support	Active Agents
ADVANCED REFINING TECHNOLOGIES LLC							
AR-1	Ebullating bed HC, metals tolerance	Resid, bitumen	Dist., GO, LSFO, Syncrude	Extrudate	Proprietary	Proprietary	Ni, Mo
Ketjenfine H-Oil	High conversion	Vacuum bottoms	Distillate, Low sulfur fuel oil	Cylinder	Proprietary	Proprietary	Co, Mo, Ni, Mo
ABLEMARLE CATALYSTS & NIPPON KETJEN CO. LTD.							
KF-1300	Ebullating bed, improved HDS, conversion		Vacuum resid	Cylinder	Proprietary	Proprietary	Ni, Mo
KF-1302	Ebullating bed, low sediment, high conversion		Vacuum resid	Cylinder	Proprietary	Proprietary	Ni, Mo
KF-1303	Ebullating bed, high HDS		Vacuum resid	Cylinder	Proprietary	Proprietary	Ni, Mo
KF-1310	Ebullating bed, improved HDS, conversion		Vacuum resid	Cylinder	Proprietary	Proprietary	Ni, Mo
KF-1311, KF-1312	Ebullating bed, low sediment, high HDS	Vacuum resid	Vacuum resid	Cylinder	Proprietary	Proprietary	Ni, Mo
CATALYSTS & CHEMICALS INDUSTRIES CO., LTD.							
R-HYC	Maximum gasoline, middle distillate	Resid	Gasoline, middle distillate	Extrudate	Proprietary	Proprietary	P

Table 5.28 (Concluded)
COMMERCIAL HEAVY OIL HYDROCRACKING CATALYSTS

Catalysts Designation	Primary Differentiation Characteristics	Application Feedstock	Application Product	Form	Bulk Density Compacted (lb/cu ft, g/cc*)	Carrier Support	Active Agents
Exxon Research & Engineering Co.							
RT-228	Mild hydrocracking	Resid	Naphtha, diesel	Cylinder, extrudate	48	Tailored pore size	Ni, Mo
RT-621	Mild hydrocracking	Resid	Naphtha, diesel	Cylinder, extrudate	45	Tailored pore size	Co, Mo

Source: 211B200

The cost of catalysts for hydroprocessing heavy oil feedstocks is significantly greater than the cost of catalysts for lighter feedstocks because of additional factors involved in manufacturing. Significant savings in time and cost can be realized by selecting an optimum catalyst formulation and by simulating commercial operation using models. Sometimes models are built for a specific process. The models focus on the initial deactivation by coke deposition followed by a steady state coke build-up on the catalyst surface and the approximately linear, continuous buildup of metals. Interphase, intraphase and inter-particle gradients of temperature and concentration are included [211B061].

Advanced Catalysts

The research and development activity in hydrocracking catalysts that is briefly discussed next concerns carbon substrates, pillared clays, cobalt saponite, NiMoTi zeolite and limonite catalysts. Limonite is a soft iron ore that can be easily ground to form a slurry catalyst. In Section 8, we develop the economics of a slurry process using this catalyst to hydrocrack bitumen derived atmospheric residue.

Carbon Substrate

Alumina modified with amorphous carbon black can be a good alternative support material for ebullating bed hydrocracking catalyst, especially for demetallization. After almost inert atmosphere pyrolysis, the addition of carbon black to alumina results in shaped strong particles that are resistant to the attrition of the ebullating bed reactor. Appropriate mixing and extrusion conditions form about 22% of total pore volume as macropores that are beneficial for removing heavy metals like nickel and vanadium. Hydrodesulfurization and hydrodenitrogenation are promoted by the combination of alumina and carbon black [211B016].

The addition of active carbon to pyrite catalyst (3 wt% as Fe + 5 wt% active carbon mixture based on vacuum residue) limited the reaction of resins to asphaltenes as shown by experimental hydrocracking of a vacuum residue. The addition of the active carbon results in the retention of the middle fractions in the products. The pyrite catalyst alone (99.9 wt% pure, <149 microns, 10 wt% as Fe based on vacuum residue) at any temperature favored the hydrocracking

to lighter products such as aromatics to saturates and saturates to gas, naphtha, kerosene and gas oil. The condensation reaction of resins to asphaltenes was accelerated at higher temperatures with only pyrite catalysts but was restricted by the mixture of activated carbon and pyrite catalyst [211B068].

Mesopore active carbon as a substrate impregnated with pyrite or in a mixture with pyrite powder as a hydrocracking catalyst shows high activities for the removal of sulfur and heavy metals (nickel and vanadium) that are mostly concentrated in the asphaltenes. The active carbon shows affinity for heavy hydrocarbon compounds and adsorption selectivity to asphaltenes. The mesopores restrict carbon formation. The distribution of vanadium within the particle is fairly uniform across the diameter with the surface being about 50% higher than the interior where as an alumina catalyst shows surface concentrations twice as high and essentially no vanadium in the central portion. An extruded active carbon catalyst shows stable performance with less sediment formation at an equivalent conversion than conventional alumina catalyst in a pilot plant ebullating bed unit. The extruded active carbon catalyst is about 25% less dense than alumina catalyst. The ebullating bed level was stable without the carbon catalyst being carried out of the reactor and the level is detectable by a γ-ray density meter. In an aging test, the active carbon catalyst is less degraded than that of the conventional alumina catalyst [211B064].

Activated carbon supported nickel molybdenum sulfide was superior to alumina supported catalyst containing the same active component and promoter for slurry phase hydrocracking of atmospheric residue from Middle Eastern crude oil. Under the same conditions, the carbon supported catalyst more greatly reduced the residual fraction and further reduce the sulfur content of the liquid product. The residual fraction was more highly adsorbed on the carbon catalyst than on the alumina catalyst. Carbon deposits on the catalyst were less for the carbon catalyst than for the alumina catalyst. For the carbon catalyst, increased surface area enhanced the catalyst activity due to better dispersion of the active metals. Recycling the catalysts to determine deterioration showed the carbon catalyst remained the more active catalyst [211B054].

Pillared Clay

Clays are amorphous materials having large pores compared to conventional catalyst supports such as silica-alumina or zeolites. The large pores are attractive support material for catalysts for hydrocracking large molecules found in residual oils. Pillaring increases the effective porosity.

Pillared clay catalysts exhibit high porosity. Pillar density is a compromise between low pillar density's bigger galleries and the higher mechanical stability of high pillar density. Pillared clays are promising candidates for hydrocracking coal liquids due to high conversion, molecular mass reduction, polynuclear aromatic ring system reduction, heteroatom removal and resistance to rapid deactivation. Montmorillonite clay pillared with chromium and pre-calcined at 932°F (500°C) and laponite, a synthetic clay, pillared with tin are both more active than, and performed at least as well as a pre-sulfided commercial NiMo on alumina catalyst or a dispersed Mo-based catalyst in hydrocracking coal liquids or a petroleum residual oil. The high efficiency of these pillared clays is attributed to their large galleries that allow the adsorption of large molecules, to the presence of strong acid sites and to thermal stability [211B089].

Hydrocracking catalytic activity of chromium pillared montmorillonite clay is retained even when highly loaded with carbon and showing a large drop in surface area and complete apparent pore blockage. The fresh pillared clay exhibited a larger surface area but much narrower pore size distribution, concentrated in the range of 3 to 5 microns, than a commercial NiMo on alumina catalyst whose pore size is centered at 9 microns but ranges up to 50 microns. After four hours of reacting a coal liquefaction extract (from British Coal at Point of Ayr Wales, pilot plant

[211B089]), the activity of the chromium pillared clay equaled that of the commercial NiMo catalyst. The small pores apparently are blocked. Possible explanations of this sustained activity of the chromium pillared clay catalyst include the dynamic nature of the carbon deposits, preferential depositions of carbon in some regions of the catalyst, the hydrogenating effect of the chromium active sites that clear the deposits from the surrounding area and hydrogen transfer through the carbonaceous layer.

The dynamic nature of the carbon deposits was demonstrated with an initially carbon coated NiMo/alumina catalyst. Initial carbon deposition on the catalyst tended to produce pore mouth blockage and reduced size of the larger pores. The deposits showed a dynamic nature with the reduction in pore diameter partially reversed between 0 and 10 minutes. The total surface area remained constant during the first 10 minutes. Between 10 and 30 minutes, the volume of the larger pores decreased slightly while the volume of the smaller ones increased marginally [211B114]. Dynamic carbon deposits bring to mind the coking behavior of hydrotreating catalysts. Hydrotreating Maya heavy oil with a commercial presulfided NiMo on alumina catalyst showed rapid coke buildup during the first 100 hours. Then the coke tends to level off or reach an equilibrium value between 1100 and 2100 hours. After 3100 hours, the catalyst is completely deactivated. Aromaticity of the coke increased with time on stream. Aliphatic reversible carbon is decreased as the catalyst ages [211B125, 211B138].

Further long term tests of the chromium pillared montmorillointe clay and the tin laponite clay are required to demonstrate catalyst life performance.

Cobalt Saponite

Cobalt supported on synthetic high surface area saponite clay promoted by 1 wt% noble metal exhibits superior bifunctional hydrocracking of heavy oils. The composition of the saponite is 58.3% SiO_2, 32.9% MgO, 5.6% Al_2O_3 and 3.2% Na_2O. The addition of noble metal increases catalytic activity and considerably reduces coke deposition on the catalyst due to improved balance between cracking and hydrogenation functions. The noble metals are more active in generating active hydrogen species compared to cobalt alone; the energy of activation for hydrogen adsorption on the catalyst surface is reduced. The presence of noble metals also increases cobalt dispersion and activates the cobalt. Rhenium is superior to platinum or palladium. Compared to unpromoted cobalt saponite catalyst, which is slightly more active than cobalt-molybdenum on alumina reference catalyst, rhenium increases hydrocracking activity by 33.3% while platinum increases activity by 9.7% and palladium by 6.3%. The rate of formation of C_1-C_5 gases decreases with the addition of noble metal, rhenium more than the others [211B096].

NiMo/Ti Zeolite

The Japan Petroleum Cooperation Center, Petroleum developed a titanium zeolite based NiMo catalyst for hydrocracking atmospheric resid. The preparation consists of zeolite modification, alumina mixing and shaping followed by active metal loading. A commercial ultra stable Y zeolite (parent USY) is pretreated with dilute sulfuric acid to dealuminate and enhance the stability. Titanium oxysulfate solution further dealuminates the zeolite and increases the mesopores besides introducing titanium oxide (3.6 wt% of the zeolite) inside the mesopores. The modified zeolite is then mixed with commercial alumina binder to form extrudates. Nickel (4 wt% as NiO) and molybdenum (16 wt% as MoO_3) are added by impregnation to provide high hydrogenation activity. The catalyst contains 40 wt% zeolite, 40 wt% alumina and 20 wt% (Ni plus Mo). Surface area is 380 m^2/g, pore volume is 0.47 cm^3/g and compact bulk density is 0.68 g/cm^3. Industrial scale production was successful.

Performance during a 2600 hour bench scale life test where the bed of hydrocracking catalyst followed beds of hydrodemetallization and hydrodesulfurization catalysts was high (47% conversion) and stable. Middle distillate yield was a constant 30 wt% at 752°F (400°C) and of excellent quality (Table 5.29) with cetane index of the diesel as high as 56 and sulfur as low as 30 ppm. The density of the product atmospheric resid was fairly low, reflecting a high hydrogen to carbon ratio and hence a better quality FCC feedstock, compared to ordinary atmospheric resid desulfurization processing [211B081].

Table 5.29
PROPERTIES OF FEEDSTOCK AND PRODUCTS

	Feedstock	Kerosene	Diesel	Resid
Yield, wt%	---	16.0	13.2	50.7
Density, g/cm^3	0.977	0.809	0.844	0.908
Sulfur, ppmw	4.4 wt%	17	33	3000
Nitrogen, ppmw	0.24 wt%	3	6	1000
Basic nitrogen, ppmw	610	---	---	---
Smoke point, mm	---	21.0	---	---
Cetane index	---	---	55.8	---
Dry sludge, wt%	---	---	---	0.09
Conradson carbon residue, wt%				5.6
Metals (Ni + V), ppmw	81	---	---	22
Asphaltene, wt%	3.5	---	---	---

Source: 211B081

Limonite

Limonite is a natural mineral, goethite, composed predominately of α-FeOOH that exhibits catalytic activity for hydrocracking heavy oils and is proposed for slurry phase hydrocracking of heavy oils. Limonite is abundant and economical to produce. In one study, natural Australian (AL) and Brazilian (BL) limonites (Table 5.30) were compared to a conventional Ni-Mo on alumina catalyst (NiMo) composed of 2.1 wt% Ni, 7.0 wt% Mo and 1.4 wt% P with a surface area of 241 m^2/g. The feedstock was vacuum residue (5.1 API) from offshore Brazil's Marlim crude oil (Table 5.31). The ability to suppress coke and gas formation (Table 5.32) corresponded to the hydrogenation activity of the catalysts found hydrocracking pure diphenylmethane and 1-methylnaphthalene: NiMo > BL > AL. The NiMo catalyst showed a high degree of suppression with the BL catalyst nearly identical. Coke formation from the vacuum residue feed at high hydrogen pressures was effectively suppressed. Conversions and distillate yields obtained from the residue were relatively higher with the limonite catalysts: AL > BL > NiMo. This was the same order of activity as shown by hydrocracking the standard compounds. Both limonites were ineffective at removing nitrogen and sulfur, but effectively removed metals. Both limonites were more efficient at nickel removal than the conventional NiMo catalyst. The authors concluded natural limonite was a viable catalyst for hydrocracking low-grade heavy oils such as the Marlim vacuum residue with in particular the Brazilian limonite possessing excellent catalytic effects [211B015].

Table 5.30
PROPERTIES OF LIMONITE

Source	Australia	Brazil
Total Iron, wt%	56.6	45.5
Silicon, wt%	2.32	1.33
Aluminum, wt%	1.15	4.29
Calcium, wt%	0.05	0.02
Magnesium, wt%	0.12	1.32
Chromium, wt%	---	4.87
Nickel, wt%	<0.01	0.63
Surface area, m^2/g	22	65

Source: 211B015

Table 5.31
CHARACTERIZATION OF OFFSHORE BRAZIL MARLIM VACUUM RESIDUE

Density (68/39°F, 20/4 °C), g/cm^3	1.036
Viscosity at 212°F (100°C), Pas	66.2
Carbon, wt%	86.66
Hydrogen, wt%	10.17
Nitrogen, wt%	1.10
Sulfur, wt%	0.90
H/C atomic ratio	1.4
Vanadium, ppm	82
Nickel, ppm	59
Asphaltene (n-heptane insolubles), wt%	21.4
Conradson carbon residue, wt%	22.8
1004°F+ (540°C+), wt%	92.6
Carbon aromaticity	0.3

Source: 211B015

Table 5.32
COMPARISON OF LIMONITE CATALYSTS FOR HYDROCRACKING ACTIVITY AND YIELDS[A]

	Thermal	NiMo	BL	AL
Conversion, wt%	88.1	63.8	77.	78.1
Coke, wt%	20.1	4.1	5	8.8
Gas (C_1-C_4), wt%	5.9	3.2	3.4	4.3
H_2 Consumption, ml/g	63	187	171	165
Fraction Yields, wt%				
C_5-401°F (C_5-205°C)	21.1	7.7	9.3	11.1
401-644°F (205-340°C)	22.2	18.1	24.1	24.5
644-842°F (340-450°C)	12.8	17.5	20.9	18.3
842-1004°F (450-540°C)	6.9	16	16.3	12.5
1004°F+ (540°C+)	11	33.4	21	20.4
Removal, %				
Sulfur	22.2	73.3	48.8	45.6
Nitrogen	---	18.4	18.4	18.4
Vanadium	---	93.2	85.4	86.6
Nickel	---	76.3	85.4	90.2

Source: 211B015

[a] Reaction conditions: 824°F (440°C), 10 MPa H_2, 3 wt% catalyst, 90 min. batch time.

Another Australian limonite pulverized to less than 1 micron diameter and suspended (30 wt% catalyst) in coal liquid was run in a 1.5 l slurry reactor with Marlim vacuum residue diluted 80:20 by weight with asphaltene free decant oil to reduce viscosity. To the 1.8 wt% limonite (1.0 wt% Fe) in the feedstock, 1.15 wt% sulfur powder (atomic ratio of S/Fe of 2) was added in order to react with the FeOOH to form pyrrhotite ($Fe_{1-x}S$) on heating. Reactor pressure was 15 MPa; LHSV was 0.5 H^{-1}. The results (Table 5.32) were compared with NiMo on alumina catalyst powder of less than 150 microns (241 m^2/g, 98 particle angstroms diameter, 7 wt% Mo, 2.1 wt% Ni and 1.4 wt% P) and slurried at 3 wt% in the feedstock. Naturally occurring sulfur in the feed sulfided the NiMo catalyst. The product yields were based on catalyst free feed. Asphaltenes were heptane insolubles.

Table 5.33
SLURRY HYDROCRACKING OF MARLIM VACUUM RESIDUE RESULTS

Run No.	**B2**	**B3**	**Y1**	**Y2**	**Y3**
Catalyst	NiMO	NiMO	AL	AL	AL
Reaction temperature, °F (°C)	842 (450)	860 (460)	824 (440)	842 (450)	860 (460)
Conversion, %	64	77	54	72	83
Product yields, wt%					
C_1-C_4	---	3.6	7.0	3.3	4.4
Oil[a]					
IBP-450°F (IBP-232°C)	11.8	15.1	7.5	11.3	15.0
450-650°F (232-343°C)	17.2	20.2	14.6	19.0	23.0
650-842°F (343-450°C)	24.1	23.8	21.3	23.4	23.8
842-977°F (450-525°C)	11.3	9.3	11.3	10.5	8.7
977°F+ (525°C+)	27.6	17.9	35.2	22.0	13.5
Coke	1.9	1.7	1.2	2.8	3.0
Total	97.4	95.1	94.4	93.4	93.5
H_2 consumption, l/kg-feed	164	234	146	194	242
Properties					
Density (68°F, 20°C), g/cm^3	0.941	0.916	0.969	0.944	0.921
Viscosity, 122°F (50°C), mm^2/g	16.1	5.96	66.5	17.2	5.86
Asphaltene, wt%	5.4	3.3	8.82	4.4	8.8
Conradson carbon residue, wt%	8.3	5.0	12.2	8.1	5.2
Molecular weight	403	312	556	423	309
Elemental analysis					
Nitrogen, wt%	0.57	0.74	0.95	0.91	0.88
Sulfur, wt%	0.62	0.62	0.46	0.44	0.43
Vanadium, ppm	4	2	14	4	1
Nickel, ppm	8	4	17	5	2

Source: 211B104

[a] Boiling range distribution determined by GCD and oil recovery.

Comparing the two catalysts at constant temperature, the authors concluded both catalysts exhibited nearly identical cracking behavior with this feedstock. The limonite catalyst was slightly more active catalyst. The limonite was slightly more active in cracking and in nickel removal than the NiMo catalyst. The hydrogen consumption was linearly correlated with the conversion independent of the catalyst. The plentiful, inexpensive natural limonite iron catalyst appears to be a highly suitable catalyst [211B104].

6 RESIDUE HYDROCRACKING PROCESS REVIEW

The key attribute of hydrocracking of residual feedstocks is flexibility – flexibility in the feedstocks cracked, in the catalyst used and in the products made. The process can achieve high conversions to good quality products. Hydrogen is added to all the liquid products. The residue hydrocracker's role in the fuels refinery (see Figure 4.1 in Section 4) is two-fold: to crack and to hydrogenate. Hydrogenation of polycyclic aromatic hydrocarbons that are not cracked by fluid catalytic cracking (FCC) allows their hydrocracking. Hydrocracking may be used to pretreat FCC feedstock. A disadvantage of residue hydroprocessing is high capital cost, however, low sulfur requirements for middle distillates and residual fuel oils require more severe hydrotreating that also increases the costs of alternate process schemes.

Hydrocracking residual oils can produce premium low-sulfur middle distillates for blending into jet fuel and diesel fuel. Residual oil from hydrocracking atmospheric residue is FCC feedstock while hydrocracked vacuum residue bottoms are RFCC feedstock. Alternatively, hydrocracked bottom oils from either type of feedstock can be steam cracked to olefins, sent to lube plants or blended into heavy fuel oil. Naphtha and light gases are by-products. Hydrocracker heavy naphtha is often catalytically reformed to improve its octane. Hydrogenation increases the degree of saturation of these products. For example, a high cetane number is imparted to the hydrocracked diesel component, whereas the light cycle oil from catalytic cracking has a low cetane index. The presence of H_2 also reduces the concentration of polycyclic aromatic compounds, preventing the buildup of coke on the catalyst. H_2 in the hydrocracker removes sulfur, nitrogen, and metals as does a hydrotreater, producing a low-sulfur, heavy bottoms oil. Because the hydrocracking reactions are very exothermic, cool H_2-rich gas is recycled to remove the heat of reaction from the reactors.

Hydrocracking of heavy oils is usually performed as one-step or two-step processes. The two step process allows the reactors to each be operated at an optimum temperature. The unconverted product residue oil can be recycled to improve conversion.

HYDROTREATING VERSUS HYDROCRACKING

The extent of conversion is the most significant difference between hydrotreating and hydrocracking as shown in Table 6.1. Conversion in hydrotreating is about 15% or less while conversion in hydrocracking is greater than 15%. Hydrocracking conversion of residual oil feeds is lower than when hydrocracking vacuum gas oils. Ebullated-bed units can achieve conversion of 1050°F+ (566°C+) residue higher than 60% whereas conversion of gas oil can reach 99%. To achieve higher conversion than hydrotreating, hydrocrackers use a different catalyst system and operate at higher pressure. Consumption of catalyst and hydrogen per barrel of feedstock are higher too. Hydrocracker fractionation sections are more complex in order to handle the larger amount of light products.

Table 6.1
RANGES OF PARTIAL PRESSURE AND CONVERSION FOR HYDROTREATING AND HYDROCRACKING

Process, Feedstock Types[a]	H_2 Partial Pressure psig	H_2 Partial Pressure kPa	Conversion, wt%
Hydrotreating			
Naphtha	250 to 450	1825 to 3204	0.5 to 5
LGO (Kerosene)	250 to 600	1825 to 4238	0.5 to 5
HGO (Diesel), LCO	600 to 800	4238 to 5617	5 to 15
VGO, VBGO, DAO, CGO, HCO	800 to 2000	5617 to 13,891	5 to 15
Residual Oil	2000 to 3000	13,891 to 20,786	5 to 15
Mild Hydrocracking			
VGO, VBGO, DAO, CGO, LCO, HCO	800 to 1200	5617 to 8375	20 to 40
Once-Through Hydrocracking			
VGO, VBGO, DAO, CGO, LCO, HCO	1500 to 2000	10,443 to 13,891	60 to 90
Residual Oil	2000 to 3000	13,891 to 20,786	15 to 25
Recycle Hydrocracking			
VGO, VBGO, DAO, CGO, LCO, HCO	1500 to 2000	10,443 to 13,891	80 to 99
Ebullated-Bed Hydrocracking			
VGO, VBGO, DAO, CGO, LCO, HCO	2000	13,891	80 to 99
Residual Oil	2000 to 3000	13,891 to 20,786	>50

Source: 211B181

[a] LGO = light gas oil; HGO = heavy gas oil; LCO = FCC light cycle oil; HCO = FCC heavy cycle oil; VGO = vacuum gas oil; VBGO = visbreaker gas oil; DAO = deasphalted oil; CGO = coker gas oil

Major technical barriers exist to obtaining high conversions of heavy feedstocks with distillation endpoints of 1150°F (620°C) or higher:

- Severe catalyst deactivation is caused by high concentrations of polynuclear aromatics.
- The higher operating temperature required with heavier feeds tends to shift the hydrogenation equilibria to favor aromatics.
- High hydrogen partial pressures (over 170 bar) to overcome this shift generally impose severe economic penalties.
- The activity of desired, relatively low coking zeolite-based catalysts is suppressed due to the very restricted access of heavier molecules to the zeolite pores [211B298].

REACTORS

The following types of reactors are used in hydrocracking:

- Up flow fixed bed reactor
- Down flow fixed bed reactor
- Ebullating bed reactor
- Slurry reactor.

Examples of their application and licensors are listed in Table 6.2. Commercial processes mainly use downflow fixed trickle bed reactors and upflow ebullated bed reactors for processing heavy oils. Hybrid schemes, for example using ebullating bed reactor followed by fixed bed reactors, can provide benefits.

Table 6.2
TYPES OF REACTORS FOR HYDROCONVERSION OF RESIDUES

Reactor Type	Application/Licensor
Continuous catalyst replacement	OCR/Chevron
Swing reactor concept	Hyvahl/IFP
Bunker-type reactor	Hycon/Shell
Ebullated bed	H-Oil/HRI LC-Fining/Lummus
Slurry system	Microcat/Exxon Veba Combi-Cracking/Veba HDH/Intevep

Source: 211B132

Selection of hydrocracker reactor type is influenced by the following factors:

1. Fluid flow and distribution
2. Pressure drop
3. Heat removal
4. Catalyst deactivation
5. Bed plugging.

Distribution of vapor and liquid is recognized with improved reactor internals. Most of the recycle hydrogen loop's pressure drop occurs across the catalyst beds. Pressure drop is to be minimized to minimize the hydrogen recycle compressor work. Heat must be removed to avoid local hot spots that can cause coking of the catalyst and to avoid temperature runaway. Temperature is usually controlled by a quench stream of cold hydrogen or feed between catalyst beds. When hydrocracking residue feeds, deactivation of guard beds by the accumulation of metals can be particularly severe, which requires provision to remove and replace the catalyst while the reactor is operating. Catalyst coking in any reactor can cause bed plugging at the entrance to the bed normally from improper feed handling. This plugging can increase bed

pressure drop and lead to maldistribution, shorter run lengths and reduced on-stream efficiency. Graded layers of catalyst are usually used in fixed bed reactors [211B289].

Fixed Bed Reactors

In fixed bed down flow reactors, both vapor and liquid flow cocurrently down the reactor over a stationary catalyst bed. Temperature is controlled by intermediate quenching with cold gas or liquid and redistribution of liquid and vapor between several beds in series. Catalyst is not added or removed during operation. The main advantage of fixed bed reactor in the downflow mode is the relative simplicity of scale-up and operation [211B025].

Both gas and liquid flow upwards through stationary catalysts beds in up flow fixed bed reactors. This seldom used design may give lower pressure drop in high plugging service due to the tendency of the bed to rearrange itself if the pressure drop builds up. Removal and addition of catalyst can be done on a semicontinuous basis.

The main problem with either type of fixed bed reactors in residue hydrocracking is coke and metal deposition on the catalyst. Coke formation occurs during the first hours of operation while metal deposition occurs during the whole catalyst run. To minimize these problems, a guard bed reactor is used with catalyst with high metal retention capacity.

Feedstocks containing 25-50 ppm of metals can be processed in a fixed bed reactor containing a high metals tolerance catalyst in the first catalyst bed. For 50 to 100 ppm metals, a triple system consisting of hydrodemetallization catalyst with a high metals capacity in a guard reactor is followed by metal tolerance catalyst and then hydrocracking catalyst. For feedstock with approximately 350 ppm metals, two guard bed reactors can be alternately operated and catalyst changed out. Alternatively for feeds with greater than 100 ppm metals, ebullated bed reactors are used [211B061].

Ebullating Bed Reactors

Ebullating bed reactors are used in the most severe service. Ebullating bed catalyst is pellets or grains less than 1 mm in size. The upward flow of liquid and vapor is at a sufficient velocity to expand the bed, usually about 20% of the bed volume. The expansion facilitates backmixing, minimizing bed plugging. The bed expansion causes the bed pressure drop to be higher per catalyst volume than a fixed bed. Oil and catalyst is separated at the top of the reactor. Catalyst is re-circulated to the bottom of the bed to mix with new feed. Fresh catalyst is added to the top of the reactor while spent catalyst is withdrawn from the bottom of the reactor. The advantage of this reactor type is mixing of the catalyst produces more uniformly deactivated catalyst throughout the bed and prevents preferential inlet catalyst deactivation and bed plugging. Product properties remain constant throughout the cycle. Solid containing feedstock can be handled. The reactor is flexible for handling changes in feedstock or desired product objectives [211B065, 211B289].

The two commercialized ebullating bed designs differ in mechanical details (Figures 6.1 and 6.2). The most obvious difference is the H-Oil reactor uses an external ebullating pump while the LC-Fining process has an internal pump [211B065].

Figure 6.1
SCHEMATIC REPRESENTATION OF THE H-OIL EBULLATING BED REACTOR [211B065]

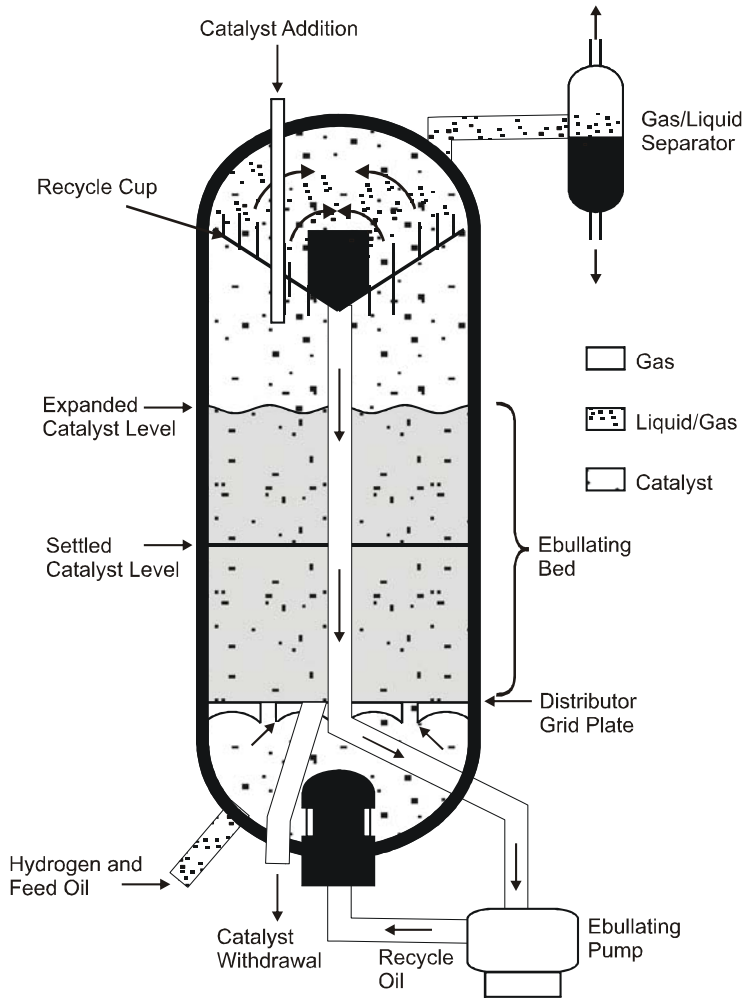

Figure 6.2
LC-FINING EBULLATING BED REACTOR [211B190]

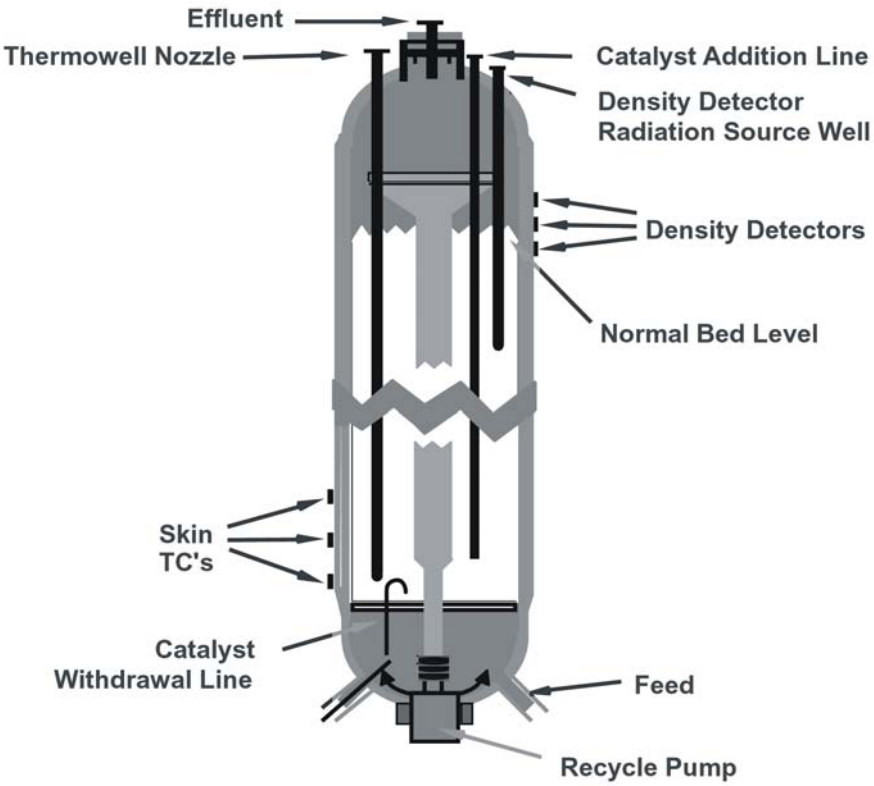

Slurry-Phase Reactors

Slurry-phase reactors are suitable for hydrocracking the most difficult feedstocks. The usually fine particle size catalyst is dispersed in the feedstock. Hydrocracking results are highly dependent upon the catalyst. Initial catalyst screening guidelines include coke suppression and product compatibility (the asphaltenes in the product oil remaining in solution). Slurry catalysts are either prepared *in situ* from oil soluble/oil dispersible or water soluble precursors or *ex situ* by impregnating small particles with catalytic metals. Recovery of these fine catalysts is problematic, usually resulting in once-through use. The catalyst must therefore be low cost and not be detrimental to the product quality [211B289].

TYPES OF HYDROCRACKING PROCESSES

Below we briefly discuss the types of hydrocracking processes with emphasis on heavy oil feedstocks. We then proceed to briefly describe mostly commercial and some developmental processes.

Once-through hydrocracking is the simplest hydrocracking configuration and does not recycle unconverted oil but produces partially converted oil and light products. The unconverted product is partially hydrogenated and low in sulfur and nitrogen. This process is suitable for upgrading heavy oils for FCC or a as lube oil base stocks.

Single stage hydrocracking incorporates recycle of unconverted heavy oil to provide almost complete conversion to distillate and lighter products. Heavy polynuclear aromatic hydrocarbons (HPNA) tend to accumulate in the liquid recycle. HPNA can cause excessive coking and deactivation of the catalyst.

Two-stage hydrocracking partially converts feedstock in the first stage reactors, which are operated at partial conversion. Unconverted recycle oil is further hydrocracked in the second stage reactor, achieving complete conversion. Through optimization of reactor conditions, two stage hydrocracking can result in lower coke formation, higher cracking and higher removal of heteroatoms compared to one stage hydrocracking. Operating the first stage reactors without recycle feed allows higher liquid feed rates without parallel reactor train or duplicate equipment [211B289].

Separate hydrotreating hydrocracking employs separate hydrogen gas recycle loops. The previous processes all use a single hydrogen recycle loop in which H_2S and ammonia are not removed between the hydrotreating and hydrocracking reactor stages. As a result, the hydrocracking catalyst is exposed to high concentrations of these contaminants. With two separate hydrogen gas recycle loops, more sulfur and nitrogen sensitive hydrocracking catalysts can be used.

Reverse-Flow hydrocracking achieves partial conversion in the treating stage, either with a mixture of treating and conversion catalysts or with a mixed-function catalyst. Similar to the two-stage process, unconverted recycle is converted in a separate reactor where it is contacted with fresh hydrogen. Effluent from the conversion reactor is combined with fresh feed and reacted in the first stage treating and partial conversion reactor. Effluent from the first stage reactor is separated into gas and liquid products. This type of hydrocracking process is subject to patent activity but is not widely commercialized [211B289].

HEAVY OIL HYDROCRACKING PROCESSES

Factors to consider in selecting a hydrocracking process for a particular heavy oil feedstock include:

- Product value
- Market trends
- Local demand
- Feedstock physical and chemical properties
- Refinery configuration [211B065].

Ebullating bed type processes for hydrocracking residue feedstocks appear to some observers to be a maturing technology. Capital costs are still high in relation to conventional hydrocracking, but conventional technology can not economically hydrocrack these heavy feedstocks [211B299].

The integration of hydrotreating and hydrocracking in one unit is one of the most recent hydroprocessing develops. Integration of distillate, VGO and resid hydrotreating with VGO hydrocracking in one application resulted in reduced equipment count reduced operating pressure, which lowered capital cost compared to separate units [211B300]. Integrating Chevron Lummus Global's LC-Fining process with a hydrocracker can produce high quality feedstocks or even ULSD from Canadian oil sands at a fraction of the cost of two standalone units [211B299].

Combining gasification with residue hydrocracking can produce hydrogen without reliance on declining Canadian natural gas supply and price escalation while consuming low value,

difficult to market hydrocracked residue. Gasification of residue feedstock is more efficient than solid feedstocks. Co-production of fuel gas and electricity can balance the energy requirements for *in-situ* thermal bitumen production [211B190, 211B323].

Hydrocracking of heavy coker gas oils increases profitability of the coker and adds economy of scale to the hydrocracker, but at the expense of significantly increased hydrogen consumption and, in some circumstances, affect the design pressure of the hydrocracker in order to maintain the same level of conversion as without the coker gas oil feed [211B299].

Chevron Lummus Global's proprietary UP Flow Reactor and On-stream Catalyst Replacement reactor technologies allow integrating units at reduced cost during revamps by upgrading existing fixed-bed reactors [211B299].

Recent reactor internal developments are offered including by Shell Global Solutions, Topsoe and UOP. Shell's filter tray technology significantly reduces reactor pressure drop tolerance and increases catalyst life when previous catalyst grading attempts failed. Life cycle improvements of 100% have been common. Topsoe recently commercialized reactor internals optimized for hydrocracking conditions. UOP's new internals provide superior liquid distribution and improved performance over a wide range of operating conditions [211B300].

Crystaphase Technologies provides reticulated ceramics in a wide range of pore sizes specifically designed to filter particles in a target size of 1-2000 microns. These large ceramics result in large open channels between porous disks. These materials create tortuosity, which is the key to collection of the particles. Particles smaller than the pore openings are captured, filling the 85% void volume, high capacity material completely before plugging. Even after pores are plugged, there is no restriction to flow in the channels. Consequently, the technology does not contribute to an increase in pressure drop. Pressure drop is mitigated, which may allow an increase in throughput [211B300].

An unique high-pressure separation technique provides a substantial recycle of unconverted oil, obtaining increased distillate selectivity at low conversion per pass. Separation at high pressure minimizes the repressurization cost [211B300].

As hydrocrackers become larger, multiple trains are often required. Staged shutdown of trains is chosen by many refiners as a means of enhancing the on-stream factor of the unit [211B299].

Next, we briefly describe hydrocracking processes that have been applied to heavy oil feedstocks. Most are commercial but some developmental processes are included.

H-Oil$_{RC}$

The H-Oil ebullated bed hydrocracking process evolved into the H-Oil$_{DC}$ and H-Oil$_{RC}$ processes now licensed by Axens. The H-Oil$_{DC}$ process is for hydrocracking heavy vacuum gasoil or deasphalted oil having a high carbon residue and metals contents but low asphaltene content. The H-Oil$_{DC}$ process is best suited for high severity operation. The H-Oil$_{RC}$ process is for hydrocracking atmospheric or vacuum residue. The H-Oil$_{RC}$ process can be operated either at high conversion (recycle mode) to produce stable products or at moderate conversion (once-through mode) to produce a synthetic crude oil. A key feature of both processes is the ebullating bed reactor that gives near-isothermal reaction temperature and allows on-stream catalyst replacement (Figure 6.1).

The H-Oil$_{RC}$ process uses two (or up to three) H-Oil ebullating bed reactors in series (Figure 6.3). Fresh resid feed and reactor hydrogen feed are heated in separate fired heaters and fed to the bottom of the first reactor. The reactors are equipped with an internal recycle cup at the top

of the reactor that feeds the ebullating pump. Effluent leaves the top of the cup. An inter stage vapor-liquid separator is optional. The liquid effluent from the first reactor is quenched with hydrogen before entering the second reactor. Vapor is separated at high pressure in three separators from liquid of the effluent from the second reactor. Vapor from the first separator and the optional inter stage separator is air cooled. Condensed liquid and wash water are removed by the second separator. Acid gases are then removed from the hydrogen rich vapor, which is recycled. Sour gas is rejected. Additional vapor is separated from the first liquid in the third separator. The vapor and liquid along with the liquid from the second separator are charged to the fractionation and stabilization section, which produces sour gas, naphtha, middle distillate and bottoms streams. The bottoms are vacuum distilled to produce vacuum gas oil and vacuum residue. Optionally, a portion of the vacuum residue can be recycled to the resid feed heater.

Figure 6.3
H-OIL$_{RC}$ PROCESS [211B217]

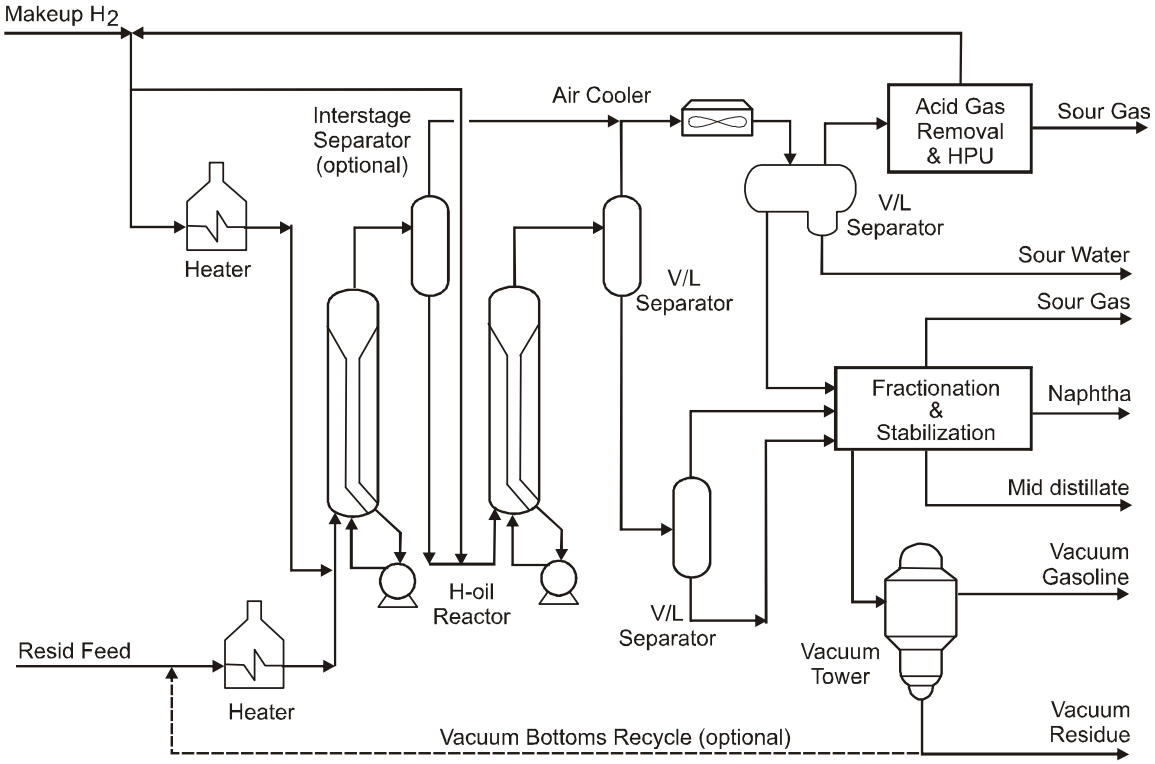

Catalyst is replaced periodically without shutdown of the reactors. Depending upon the feedstock and desired products, different catalysts are available. An H-Oil$_{RC}$ unit can operate for three years at constant catalyst activity with conversion in the range of 50 to 80% and with hydrodesulfurization as high as 85%. Reactor temperature ranges from 770-820°F (410-438°C). Hydrogen partial pressure ranges from 1,600 to 1,950 psi. Liquid hourly space velocity is in the range of 0.25 to 0.6 H^{-1}. Yields from Arabian Medium vacuum residuum at 65% and 90% conversion are given in Table 6.3.

Table 6.3
H-OIL PROCESS FEEDSTOCK AND PRODUCT DATA

	Arabian Medium vacuum residuum	
	65% Conversion	**90% Conversion**
Feedstock		
API Gravity	4.9	
Sulfur, wt%	5.4	
Metals (Ni+V), ppm	128.0	
Products, wt%		
Naphtha (C_5-400°F, 204°C)	17.6	23.8
Distillate (400-650°F, 204-343°C)	22.1	36.5
Vacuum gas oil (650-975°F, 343-524°C)	34.0	37.1
Residuum (>975°F, >524°C)	33.2	9.5

Source: 211B292

Seven H-Oil$_{RC}$ units are operating with a total capacity of 300,000 BPSD. Three examples of applications of the process are:

- Ural vacuum residue feedstock (1000°F+, 538°C+) is processed at a seasonal 52-68 vol% conversion to produce a stable fuel oil containing less than 1 wt% sulfur, 22-27 vol% diesel and 17-31% VGO. The diesel is further hydrotreated to meet ULSD specifications in an integrated hydrotreater (Prime-D process) [211B176].
- The vacuum residue from a blend of 70% Arabian Light crude oil, 30% Arabian Heavy crude oil contains 5.5 wt% sulfur. At above 75% conversion, a stable fuel oil with 2 wt% sulfur is produced [211B217, 211B289].
- Heavy Mexican vacuum residue has been converted into gasoil and diesel fuel in Pemex's Salamanca Refinery (18,500 B/D design capacity) for over 30 years and at the Tula Refinery (50,000 B/D design capacity) [211B016].

H-Oil$_{DC}$

Although not a true resid process, the H-Oil$_{DC}$ process licensed by Axens is mentioned since, unlike most gas oil hydrocracking processes, it handles heavy vacuum gas oils containing high carbon residue and high metals but the asphaltene content must be low. High severity operations and application requiring long run lengths are its best applications. To produce ultra low sulfur diesel fuel product, middle distillate hydrotreating is integrated with the hydrocracker.

Like the H-Oil$_{RC}$ process, the H-Oil$_{DC}$ process uses an ebullating bed reactor. The heavy VGO feed and recycle hydrogen are heated in separate fired heaters (Figure 6.4). The fresh feed, hydrogen and recycle oil from the reactor are combined and charged to the bottom of the reactor. Effluent from the top of the reactor is separated in a specially designed separator at high pressure, a portion of the liquid is the recycle oil. The remainder is charged to a gas oil stripper. The stripper bottoms are FCC feedstock. The stripper overhead flows to the top of a stabilizer. A stripped distillate stream is combined with the separated reactor vapor effluent and hydrotreated.

Figure 6.4
H-OIL$_{DC}$ PROCESS [211B217]

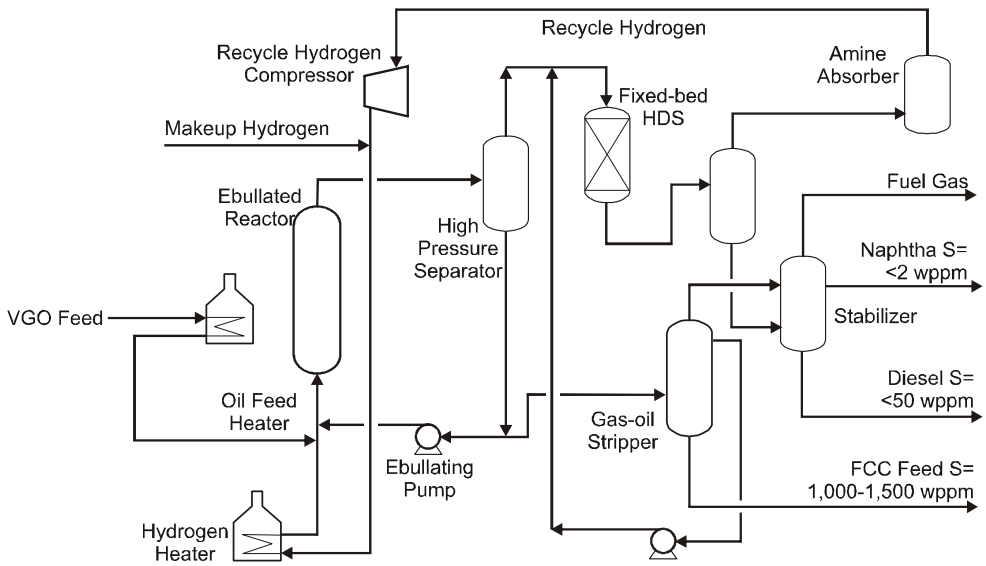

The hydrotreating reactor is a downflow fixed bed. Effluent is separated into a hydrogen rich gas stream and a liquid stream. The hydrogen rich gas is amine treated to remove H_2S, compressed, combined with make up hydrogen and recycled to the hydrocracker reactor. The hydrotreated liquid is charged to the stabilizer, near the bottom. The stabilizer produces fuel gas, naphtha and diesel fuel.

Hydrocracker operating conditions are: 750-820°F (399-438°C), 600-1,500 psi hydrogen partial pressure and liquid hourly space velocity of 0.5-3.0 H^{-1}. In the once-through mode, conversion ranges from 20-80 wt%. For example, a blend of VGO plus deasphalted feed containing close to 100 ppm metals is 80% conversion at an overall desulfurization rate of over 96% [211B217].

LC-Fining

LC-Fining is an ebullating bed reactor process licensed by Chevron Lummus Global LLC for hydrocracking atmospheric or vacuum residues. A full range of high quality distillate products are produced.

In the process (Figure 6.5), residue feedstock is heated in a fired heater and mixed with hydrogen that is heated in a separate fired heater and charged to the bottom of the ebullating bed reactor (Figure 6.2). A typical reactor size is 14.3 ft O.D., 13 ft ID by 120 ft T-T [211B190]. Internal recycle in the reactor is provided by an internal pump to control bed expansion and maintain turbulence. The reactor is essentially isothermal. On-stream catalyst replacement intermittently adds and withdraws catalyst to maintain conversion and selectivity. Reactor effluent is separated first at high pressure then at low pressure with vapor from both separators combined and cooled before hydrogen is separated, compressed and recycled. Recovering and purifying hydrogen at low pressure reduces capital cost and allows lower gas rates. Separated liquids are fractionated.

Figure 6.5
LC-FINING PROCESS [211B217]

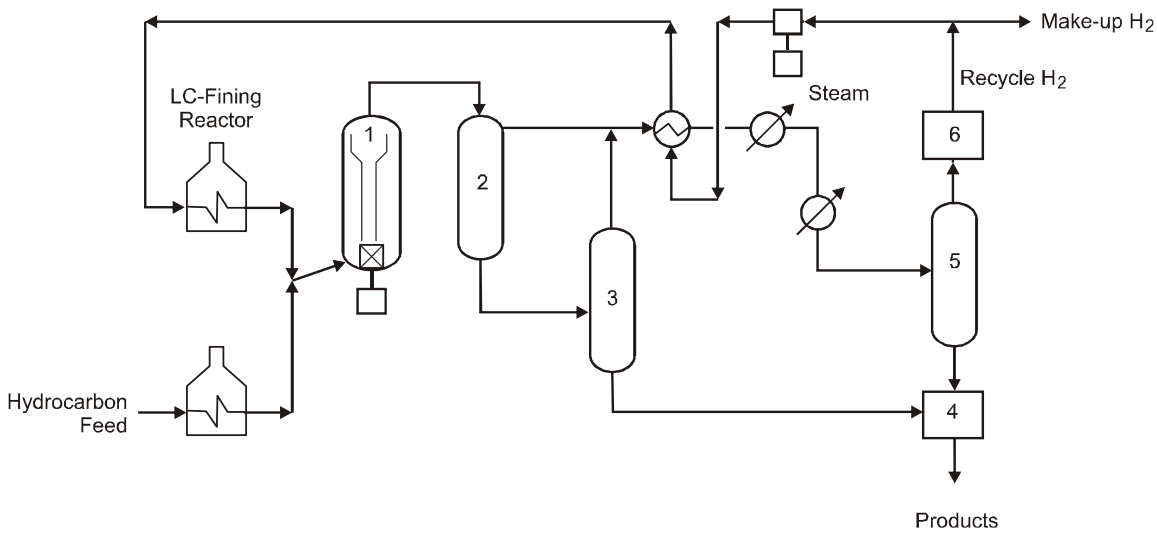

Reactor temperature ranges from 725-840°F (385-449°C). Reactor pressure ranges from 1,400 to 3,500 psig and hydrogen partial pressure ranges from 1,000 to 2,700 psig. Liquid hourly space velocity is 0.1 to 0.6 H^{-1}. Conversion ranges from 40 to over 97% with 60-90% desulfurization, 50-98% demetalization and 35-80% carbon residue reduction. Yields from the hydrocracking of atmospheric and vacuum residues from Arabian light crude oil blended with Arabian heavy crude oil are presented in Table 6.4.

Table 6.4
LC-FINING PROCESS PRODUCT YIELDS FROM RESIDUES FROM ARABIAN LIGHT AND HEAVY CRUDE OILS

	Atmospheric Resid	Vacuum Resid	Vacuum Resid	Vacuum Resid
Feedstock				
Conversion, %	45	60	75	95
API Gravity	12.4	4.7	4.7	4.7
Sulfur, wt%	3.9	5.0	5.0	5.0
Nickel, ppmw	18.0	39.0	39.0	39.0
Vanadium, ppmw	65.0	142.0	142.0	142.0

Table 6.4 (Concluded)
LC-FINING PROCESS PRODUCT YIELDS FROM RESIDUES FROM ARABIAN LIGHT AND HEAVY CRUDE OILS

	Atmospheric Resid	Vacuum Resid	Vacuum Resid	Vacuum Resid
Product Yields[a], vol%				
Naphtha (C_5-400°F, -204°C)	7.0	12.6	18.3	23.9
Distillate (400-650°F, 204-344°C)	15.2	30.6	42.7	64.8
Heavy Distillate (650-975°F, 344-524°C)	53.0	21.5	19.3	11.9
Residuum (>975°F, >524°C)	24.5	40.0	25.0	5.0

Source: 211B292
[a] Distillation ranges may vary by several degrees because of different distillation protocols.

LC-FINING operated at Shell Canada since 2003. Moderate residue hydrocracking conversion is about 75% at 975°F (524°C). Two or more stages of ebullated bed reactors in series feeding vacuum residue with each train having at least two reactors. Nine LC-FINING units are in operation and three are various stages of design and construction as of 2006 [211B185, 211B288].

ISOFINING

ISOFINING is a mild residue hydrocracking process licensed by Chevron Lummus Global. ISOFINING with a single stage ebullated bed reactors feeding atmospheric residue with two or more reactors in parallel per train has been operating at Syncrude since 1985. Conversion is about 60% at 975°F (524°C) [211B190].

KOBELCO SPH

The KOBELCO SPH (Slurry-Phase Hydrocracking) process licensed by Kobe Steel Ltd. is designed to convert ultra-heavy oil to high quality distillates. Originally well-established for brown coal hydrocracking, the process has been demonstrated for ultra heavy oil in a 3 B/D unit operated for over 1,500 hours.

Ultra-heavy oil such as bitumen is hydrocracked (Figure 6.6) using a dispersed natural catalyst of limonite ore (α-FeOOH) (see Section 5). The fresh catalyst is slurried with the fresh feedstock and recycled heavy oil in a stirred tank, the slurry is pressurized and combined with fresh hydrogen before heating in a fired heater. Additional fresh hydrogen is heated in the convection section of the fired heater and combined with the hot reactor feedstock. The hydrocracking reactor is three-phase upflow reactor. Recycle gas is charged at two locations to the reactor. Vapor and liquid-solid reactor effluent is separated at reactor temperature and pressure. Solid catalyst is then separated from the liquid by vacuum flashing. A portion of the flasher bottoms is sent to a toluene-insoluble (coke) remover. The metal laden spent catalyst leaves with the residue oil from the toluene-insoluble remover. The remainder of the flasher bottoms is combined with the solid-free fraction from the top of the toluene-insoluble remover and recycled to the slurry tank. The flashed overhead hydrocarbon is cooled and the liquid hydrocarbon is separated from the off gas and water phases. This hydrocarbon is pumped and combined with the reactor effluent vapor and fresh hydrogen and charged to the integrated hydrotreater.

Figure 6.6
KOBELCO SPH PROCESS [211B217]

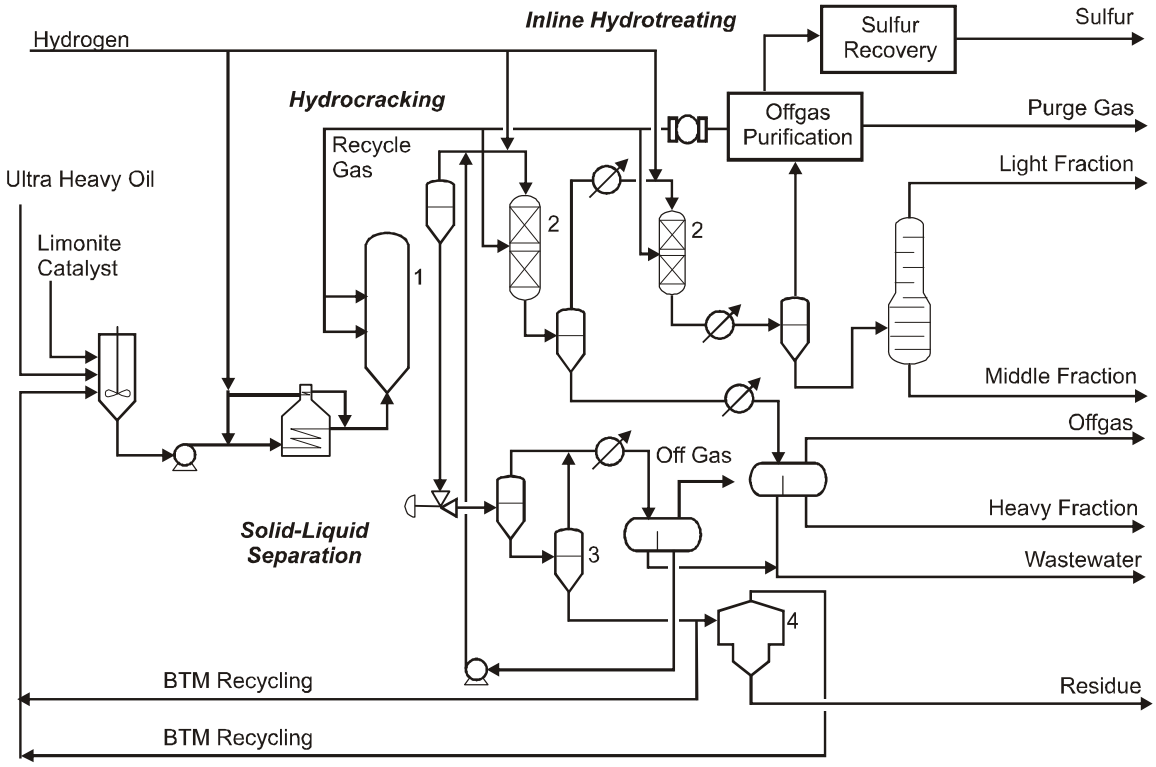

The hydrotreater section consists of two-stage fixed bed, downflow reactors filled with two beds each of conventional hydrotreating catalysts. Recycle gas is injected after the first bed of each reactor. Liquid in the effluent of the first stage reactor is separated from the vapor, cooled and off gas, water and heavy oil product separated. Vapor is cooled, combined with fresh hydrogen and charged to the second stage reactor. The hydrotreated effluent is cooled and hydrogen rich gas separated, purified and recycled. The hydrotreater liquid product is fractionated into light and middle distillate fractions.

Typical operating conditions for hydrocracking atmospheric topped bitumen (Table 6.5) from Athabasca oil sands are: 842°F (450°C), 10 MPa, catalyst loading of 0.5 wt% and 1 H residence time. The conditions of the first stage hydrotreating reactor are: 662°F (350°C), 10 MPa and $1H^{-1}$ liquid hourly space velocity (LHSV). The second stage hydrotreating reactor also operates at 662°F (350°C) and 10 MPa but with a 0.5 H^{-1} LHSV. Yields and product sulfur and nitrogen contents are summarized in Table 6._ [211B175, 211B217].

Table 6.5
PROPERTIES OF ATMOSPHERIC TOPPED BITUMEN AND KOBELCO SPH PRODUCT YIELDS AND PROPERTIES

Feed Properties		
Gravity, API	6.7	
975°F+ (524°C+) Residue, wt%	48.5	
Sulfur, wt%	5.0	
Nitrogen, wt%	0.44	
Carbon residue, wt%	14.3	
Toluene insolubles, wt%	0.61	
Yields, vol% atmospheric topped bitumen		
Naphtha, C_5-350°F (177°C)	19.7	
Diesel fuel, 350-650°F (177-343°C)	52.0	
Vacuum gas oil, 650-975°F (343-524°C)	30.8	
Residue, 957°F+ (524°C+)	3.0	
Hydrotreater Products, First Stage/Second Stage	**Sulfur**	**Nitrogen**
Naphtha, C_5-350°F (177°C)	27/1	9/1
Diesel fuel, 350-650°F (177-343°C)	141/2	91/1
Vacuum gas oil, 650-975°F (343-524°C)	1600/---	1550/---
Residue, 957°F+ (524°C+)	---	---

Source: 211B217

We develop the economics of this process for hydrocracking atmospheric resid derived from bitumen in Seciton 8. Economics of another slurry hydroprocessing process, ENI Slurry hydroprocessing Technology for diesel fuel are developed in PEP Review 99-2 (2003).

UOP Slurry Hydrocracking Process

UOP LLC recently announced a new slurry hydrocracking process for heavy oils and bitumen based on technology licensed from Natural Resources Canada [211B183].

$(HC)_3$™ Technology

Headwaters Technology Innovation Group's $(HC)_3$ Technology for hydrocracking heavy crude oil or bitumen uses an homogeneous catalyst that is homogeneously dispersed as a colloid with particles similar in size to asphaltene molecules. High conversion of asphaltenes results [211B065].

Veba Combi-Cracking Process

The Veba Combi-Cracking process is a thermal hydrocracking process for converting heavy feedstocks. The residua feed is slurried with a small amount of finely divided additive and mixed with hydrogen and recycle gas prior to preheating. The feed mixture is reacted in liquid phase reactors in series operated in the upflow. Temperature is controlled by a recycle quench gas. Reactor is separated in a hot separator where vaporized products are separated from unconverted material. Vacuum flashing recovers distillates from the hot separator bottom stream.

The hot separator vapor product plus recovered distillates and straight-run distillates enters a gas phase catalytic, trickle flow hydrogenation reactor operating at the same pressure as the liquid phase reactors. The operating temperature (644-788°F, 340-420°C) is controlled by a hydrogen quench. Product liquid is separated from vapor in a cold separator and fractionated, producing hydrocarbon light gases, naphtha, middle distillate and vacuum gas oil. The hydrogen rich gas is scrubbed to remove contaminant gases (H_2S, NH_3) and recycled.

In once through operation, conversion greater than 95% is achieved. At high levels of residue conversion, asphaltenes are substantially converted; desulfurization and denitrogenation occur. Feedstock and product yields are given in Table 6.6.

Table 6.6
VEBA COMBI-CRACKING PROCESS YIELDS

Feedstock	Arabian heavy vacuum residuum
API Gravity	3.4
Sulfur, wt%	5.5
C_7 Asphaltenes, wt%	13.5
Carbon residue, wt%	8.4
Metals (Ni+V), ppm	230.0
Conversion (>1025°F, >550°C), %	95
Products, vol%	
Naphtha (<340°F, <170°C)	26.9
Middle distillate (340-700°F, 170-370°C)	36.5
Gas oil (<700°F, <370°C)	19.9

Source: 211B292

CANMET

The CanMet HCR process was developed by Canadian Research Center for Mineral and Energy Technology to hydrocrack heavy pitch and atmospheric or vacuum residue. The original heavy pitch contained indigenous clay mineral and used a coke inhibiting additive. The additive was prepared with iron sulfate, which promotes hydrogenation and prevents coke formation. The use of the additive allows the reactor to operate at a higher temperatures to give higher conversion. Coal and a disposable additive are slurried with vacuum residue or bitumen, combined with hydrogen, heated in a fired heater, mixed with hot additional hydrogen from a separate fired heater and fed to a single-stage upflow reactor (Figure 6.7). The process does not

use an added catalyst. The reactor effluent is separated and fractionated to recover distillate products and distillable residue. The conversion of the coal is highly dependent upon the coal characteristics, but may be as high as 98% on a dry, ash-free basis. Conversion of the heavy oil may be up to 70% depending upon the reactor severity. Optionally, slurring the feedstock with less than 10 ppm molybdenum naphthenate catalyst reduces the yield of coke.

Figure 6.7
CANMET PROCESS [211B292]

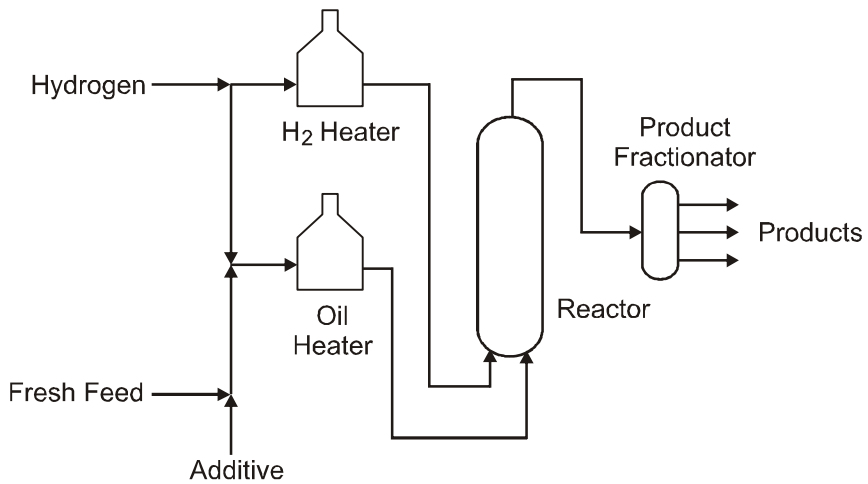

Typical operating conditions are: 824-860°F (440-460°C) reactor temperature and 10-15 MPa pressure with coal concentrations of 30-40 wt% (mineral matter free-basis). Yields and product sulfur and nitrogen from the CANMET process hydrocracking Cold Lake heavy oil vacuum residuum are given in Table 6.7 [211B065, 211B292].

Table 6.7
CANMET PROCESS FEEDSTOCK AND PRODUCT DATA

Feedstock[a]	
API gravity	4.4
Sulfur, wt%	5.1
Nitrogen, wt%	0.6
Asphaltenes, wt%	15.5
Carbon residue, wt%	20.6
Nickel, ppm	80
Vanadium, ppm	170

Table 6.7 (Concluded)
CANMET PROCESS FEEDSTOCK AND PRODUCT DATA

Products[b], wt%	
Naphtha (C_5-400°F, 204°C)	19.8
Nitrogen, wt%	0.1
Sulfur, wt%	0.6
Distillate (400-650°F, 204-343°C)	33.5
Nitrogen, wt%	0.4
Sulfur, wt%	1.8
Vacuum gas oil (650-975°F, 343-524°C)	28.5
Nitrogen, wt%	0.6
Sulfur, wt%	2.3
Residuum (>975°F, >524°C)	4.5
Nitrogen, wt%	1.6
Sulfur, wt%	3.1

Source: 211B292

[a] Cold Lake (Canada) heavy oil vacuum residuum.

[b] Residuum: 93.5 wt%.

Microcat-RC Process

Microcat-RC process (also called the M-Coke process) is a heavy oil slurry catalytic hydrocracking process that operates at relatively moderate pressures and temperature. The novel catalyst particles contain a metal sulfide in a carbonaceous matrix formed within the process. Because of the ultrasmall size (10^{-4} in diameter) of the catalyst particles, there are typically several orders of magnitude more partilcles per volume than with conventional catalyst particles. This results in less time for a reactant molecule or an intermediate to find an active catalyst site. Pore-plugging problems are avoided because of the small size of the catalyst.

Fresh vacuum residuum, microcatalyst and hydrogen are fed to the primary reactor (Figure 6.8). Effluent is flashed separated to recover hydrogen, gases and liquid products including naphtha, distillate and gas oil. The flashed residuum is vacuum distilled to obtain product oil (1050°F-, 565°C-) and bottoms that contains the unconverted feed, microcatalyst and essentially all the metals from the feed.

Figure 6.8
MICROCAT-RC PROCESS [211B292]

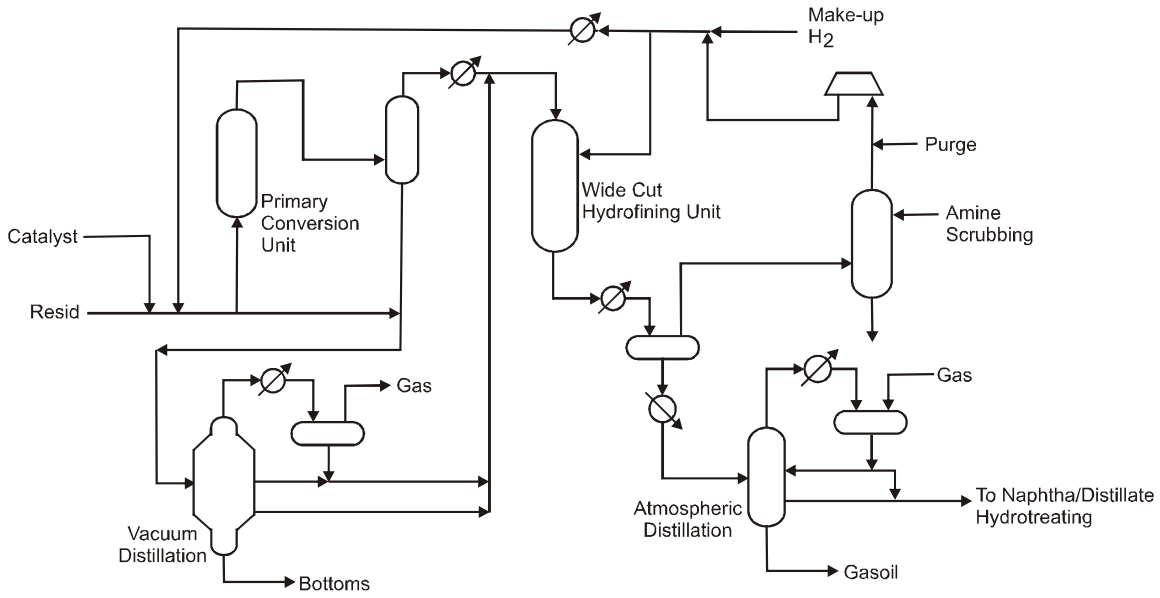

The flashed overhead is cooled and combined with the distillate product and fed to an integrated or stand alone hydrotreating reactor (Hydrofining process). The effluent is cooled and vapor and liquid separated. The hydrogen rich vapor is amine scrubbed to remove H_2S. The hydrogen is combined with make-up hydrogen and sent to both the hydrocracker and hydrotreating reactors. The hydrotreated flashed liquid is fractionated at atmospheric pressure to produce naphtha and distillate overhead and gas oil bottoms product [211B292].

The yields of the Microcat process hydrocracking Cold Lake heavy oil vacuum residuum are given in Table 6.8.

Table 6.8
MICROCAT PROCESS YIELDS FROM HYDROCRACKING COLD LAKE HEAVY OIL VACUUM RESIDUUM

Feedstock	
API Gravity	4.4
Metals (Ni+V), ppm	480.0
Carbon residue, wt%	24.4
Product Yields, vol%	
Naphtha (C5-350°F, -177°C)	17.2
Distillate (350-650°F, 177-343°C)	63.6
Gas Oil (650-1050°F, 343-566°C)	21.9
Residuum (>1050°F, >566°C)	2.1

Source: 211B292

MRH Process

The MRH process is a slurry hydrocracking process for upgrading heavy feedstocks containing large amounts of asphaltenes and metals to produce mainly middle distillates. The reactor is a three-phase reactor containing liquid feedstock, fine catalyst and hydrogen gas.

In the process (Figure 6.9), a slurry of feedstock and fine powder catalyst is pumped from a mixing tank to through a fired heater to the reactor. Preheated hydrogen is fed to the bottom of the reactor and flows upward through the reaction slurry. Thermal and catalytic reactions occur. Vapor is disengaged from the slurry in the upper section of the reactor. Hydrogen and other gases are separated in a high pressure separator. H_2S is removed by amine scrubbing, make-up hydrogen is added and the hydrogen rich gas is recycled. Liquid obtained by condensing the separator overhead vapor is fractionated. The products are further treated downstream.

Figure 6.9
MRH PROCESS [211B292]

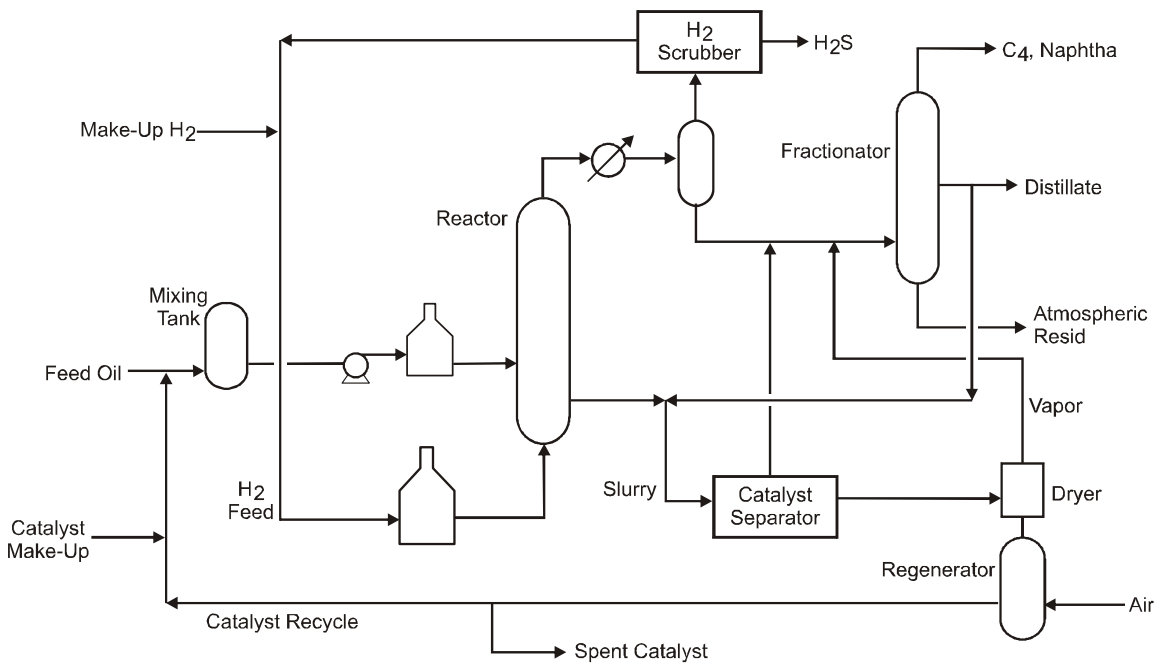

Bottom slurry oil containing catalyst, uncracked residuum and a small amount of vacuum gas oil fraction is withdrawn from the lower section of the reactor. A portion of distillate from the fractionator is added before the catalyst is separated. The distillate and vacuum gas oil are charged to the fractionator. The catalyst is dried (with vapor charged to the fractionator) and regenerated with air. A portion is discarded and fresh catalyst added before mixing with the feed oil.

The product yield from hydrocracking Arabian heavy vaccum residuum and Athabasca bitumen are summarized in Table 6.9 [211B292].

Table 6.9
MRH PROCESS FEEDSTOCK AND PRODUCT DATA

	Arabian Heavy Vacuum Residuum	Athabasca Bitumen
Feedstock		
API Gravity	5.9	10.2
Sulfur, wt%	5.1	4.3
Nitrogen, wt%	0.3	0.4
C_7 Asphaltenes, wt%	11.4	8.1
Carbon residue, wt%	21.7	13.3
Nickel, ppm	41.0	85.0
Vanadium, ppm	127.0	182.0
Distillation, vol%		
Naphtha	0.0	2.2
Kerosene	0.0	5.3
Vacuum gas oil	4.0	31.8
Vacuum residuum	96.0	48.6
(Atmospheric residuum)	(100.0)	(100.0)
Products, wt%		
Naphtha	13.0	12.0
Sulfur	0.2	1.1
Nitrogen	0.03	0.05
Kerosene	6.0	11.0
Sulfur	1.0	1.2
Nitrogen	0.06	0.08
Light gas oil	17.0	29.0
Sulfur	2.5	2.2
Nitrogen	0.06	0.11
Atmospheric residuum	55.0	41.0
Sulfur	3.8	3.8
Nitrogen	0.36	0.57

Source: 211B292

Residue Hydroconversion Process

The Residue Hydroconversion Process (RHC) is a high pressure fixed bed trickle flow hydrocracking process for atmospheric or vacuum residue. The process (Figure 6.10) features multibed reactors with interbed cooling and a multicatalyst system tailored to the feedstock and desired conversion.

A hydrodemetallization catalyst is used in the front end reactor(s) when hydrocracking high metal feeds. This catalyst has a high capacity for metals and also good activities for asphaltene conversion and residue cracking. Downstream catalyst beds contain an optimized combination of catalysts with hydrogenation function and texture to achieve the desired catalyst stability and activities for denitrogenation, desulfurization and heavy hydrocarbon cracking [211B292].

Figure 6.10
THE RESIDUE HYDROCONVERSION (RHC) PROCESS [211B292]

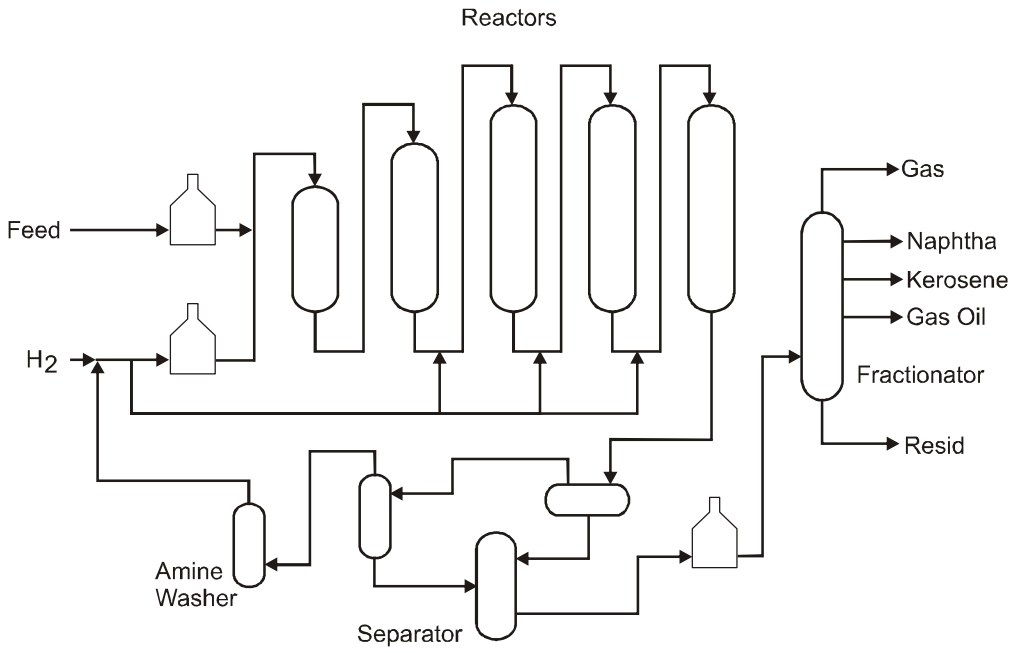

The RHC process yields are given in Table 6.10 [211B292].

Table 6.10
RHC PROCESS YIELDS

Feedstock	Unspecified residuum
API Gravity	24.4
Sulfur, wt%	0.1
Nitrogen, wt%	0.1
Carbon residue, wt%	0.3
Product Yields, vol%	
Naphtha	4.5
Light gas oil	19.4
Vacuum gas oil	77.10
Sulfur, wt%	0.01
Carbon residue, wt%	0.20

Source: 211B292

China University of Petroleum Slurry-Bed Process

This slurry-bed hydrocracking process recently developed by China University of Petroleum upgrades various ultra-heavy crude oils, especially their bottoms. These oils contain high amounts of sulfur, nitrogen, metals and carbon residue that can not be processed by conventional RFCC and ARDS/VRDS processes. Residue slurry hydrocracking is integrated with hydrotreating (Figure 6._) to produce low-sulfur naphtha, high quality diesel, light gas oil and residue oil. Light oil yield is 70-80% with diesel comprising more than 50% of the total. The process is being demonstrated in a 100 kt/a plant in Fushun PetroChemical Company [211B024].

ALTERNATIVE HYDROGEN SOURCES

Molecular hydrogen is a relatively expensive source of hydrogen for hydrocracking compared to possible alternatives. The water-gas synthesis reaction

$$CO + H_2O = CO_2 + H_2$$

under supercritical conditions is an effective source of hydrogen for slurry hydrocracking residual oils. Results with dispersed catalysts are similar to those obtained with molecular hydrogen. Dispersed catalysts improve the distribution or properties of the cracked products and inhibit asphaltene or coke (toluene insolubles) formation.

Under supercritical conditions, many physical properties such as viscosity and diffusivity are intermediate between those of a liquid and a gas. Properties vary continuously and greatly. Supercritical fluid conditions increase the solvent power of some solutes. Miscibiolity with gases creates an homogenous environment for some heterogeneous reactions by eliminating interphase boundary transportation limits on reaction rates. Diffusion limited liquid phase reactions can be accelerated under supercritical conditions. Furthermore, the intrinsic reaction rate and reaction equilibrium can be controlled by changing the pressure, which affects the solvent effect on the reaction.

In a laboratory evaluation of slurry hydrocracking with $H_3(P(Mo_3O_{10})_4 \bullet xH_2O$ (PMA) catalyst precursor, supercritical water with different kinds of alternative reactants, the yield of toluene insolubles (coke precursors) was in the order:

$$\text{Pressurized } H_2 \text{ gas} > (CO + H_2)/H_2O > H_2/H_2O > CO/H_2O.$$

The yield of toluene insolubles was much lower with these hydrogen sources and PMA catalyst precursor than obtained by noncatalytic hydrocracking, suggesting the condensation reaction was “markedly suppressed”. The addition of water to the hydrogen system seemed to negatively effect the hydrogenising reaction. However, the presence of carbon monoxide in the hydrogen water system synergistically decreased the yield of toluene insolubles to the case with pressurized hydrogen gas. With the alternate sources and this catalyst, the distribution of cracked products improved significantly compared to noncatalytic hydrocracking. The yield of 572-932°F (300-500°C) liquid fractions was higher and the yield of less than 392°F (200°C) fractions was lower. The H_2/H_2O system produced the highest percentage of saturated products and generally the highest percentage of resins [211B083].

A laboratory study evaluated various dispersed catalyst precursors. Hydrocracking Gudao crude oil residue resulted in the following order of activity:

$$\text{PMA} > \text{nickel naphthelate} > (NH_4)_5Mo_7O_{24} \bullet 4H_2O > \text{cobalt naphthelate} > Ni\ (Ac)_2$$

When using water-syngas reaction as the hydrogen source, the optimum catalyst concentration was 500 µg PMA/g produced a higher yield of 572-932°F (300-500°C) liquid fractions and lower yields of less than 392°F (200°C) fractions than without catalyst, suggesting

PMA suppressed over-cracking. The PMA also increased the saturate content, C/H ratio, hydrogen consumption while decreased the asphaltenes or resins and coke (toluene-insolubles) [211B094].

OPERATING CONDITIONS

In general depending upon the properties of the feedstock, hydrocracking and catalysts system, hydrocracking may require hydrogen pressures of the order of 1500-2000 psi or even higher at temperatures in the range of 700-800°F (370-425°C) and long residence times of 2-4 hours [211B051].

LHSV

Reducing liquid hourly space velocity (LHSV) or increasing residence time in the reactor increases conversion of vacuum residues, improves desulfurization and increases the conversion of asphaltenes and improves the reduction of carbon residue.

Recycle

Some compounds in the hydrocracked bottom vacuum residue oil react during the first pass through an ebullating bed reactor creating compounds with different reactivities. When the bottoms are recycled to the reactor, these molecules react further to produce distillates, “partially” converted molecules and condensates.

These conclusions were demonstrated in a 5 liter steady state ebullating bed reactor hydrocracking 932°F+ (500°C+) vacuum residue with proprietary NiMo on alumina catalyst (2% fresh catalyst addition and withdrawal). The residue comprised 63% of the Jobo-Morichal crude oil from the Orinoco Belt in Venezuela. The fresh feed (VR^0) characterization, start of run yields and bottom vacuum residue (VR^1) properties from the first pass were summarized in Table 6.11. The fresh feed was 60% converted into diesel and vacuum gas oil products. Bottoms residue (VR^1) sulfur, nitrogen, vanadium, nickel, resins and hydrogen content were reduced compared to the fresh feed (VR^0). Asphaltenes and Conradson carbon residue were increased.

Table 6.11
JOBO-MORICHAL VACUUM RESIDUE FEED AND FIRST PASS PRODUCT PROPERTIES

	Feed	Products			
	VR^0 932°F+ (500°C+)	Naphtha C_2-392°F (C_2-200°C)	Diesel 392-662°F (200-350°C)	Vacuum Gas Oil 662-932°F (350-500°C)	VR^1 932°F+ (500°C+)
Yield, wt%	70	3.5	20	40.16	30.34
Density, g/cm^3	1.099	0.7723	0.8734	0.9472	1.051
Nitrogen, wt%	0.903	0.021	0.0073	0.947	1.19
Sulfur, wt%	5.02	0.3017	0.761	1.43	2.52
Carbon, wt%	87.1	83.8	85.23	86.2	88.9
Hydrogen, wt%	9.5	13.9	12.83	10.8	9.34
Conradson Carbon, wt%	22	---	---	0.12	33.06
C_7 Asphaltenes, wt%	21	---	---	---	28.7
(C_5-C_7) Resins, wt%	14	---	---	---	13.5
Vanadium, ppmw	743	---	---	---	800
Nickel, ppmw	98	---	---	---	45
Molecular Weight (GPC)	1250	---	---	---	1080

Source: 211B071

Then to determine the effect of recycle, 90 wt% of the fresh feed (VR0) was blended with 10 wt% of VR1 and hydrocracked with a fresh batch of catalyst. Repeatedly 10 wt% of the vacuum residue product of this i^{th} pass (VR^i) was blended 90 wt% fresh feed and reacted with fresh catalyst to produce vacuum residue product (VR^{i+1}) for five passes. The properties of the bottoms vacuum residues from the first four passes were summarized in Table 6.12. Other experimental results indicated the first pass decreases residue conversion by 10 wt% and the fifth pass by up to 35 wt% in the unconverted residue. With increasing number of passes, the vacuum residue yield tended to increase. The (C_5-C_7) resins and average molecular weight decreased while the asphaltenes increased along with the associated heteroatoms and carbon residue. The increase in asphaltenes indicated asphaltene reactivity decreased and catalyst deactivation increased due to the more condensed aromatic (indicated by the lower C/H ratio and higher carbon residue; verified by ^{13}CMNR results)--and more refractory--asphaltene composition due to the presence of “aged” material adsorbed on the catalyst surface.

Table 6.12
PROPERTIES OF VACUUM RESIDUE PRODUCT AFTER SUCCESSIVE RECYCLE REACTOR PASSES

	Passes			
	VR[1]	VR[2]	VR[3]	VR[4]
Yield, wt%	30.34	31.22	30.88	31.1
Density, g/cm^3	1.051	1.055	1.058	1.063
Nitrogen, wt%	1.19	1.22	1.33	1.44
Sulfur, wt%	2.52	2.64	2.74	2.88
Carbon, wt%	88.9	89.1	89.4	89.7
Hydrogen, wt%	9.34	9.24	9.19	9.14
Conradson Carbon, wt%	33.06	34.1	34.5	34.8
C_7 Asphaltenes, wt%	28.7	29.4	30.1	32
(C_5-C_7) Resins, wt%	13.5	12	11.1	10.4
Vanadium, ppmw	800	1200	1280	1350
Nickel, ppmw	45	50	61	70
Molecular Weight (GPC)	1080	1000	970	940

Source: 211B071

The effects of catalyst deactivation by recycling vacuum residue were also studied and reported. The catalyst was strongly deactivated by accumulated metals and insoluble materials, most of the metals and coke were inside the catalyst pores, but some coke was on the exterior of the particles. The insoluble materials become coke as they age. These results were explained by the authors: "The particular residence time distribution in the EBR (ebullating bed reactor) with separation and recycle is responsible for the old non-reactive and insoluble material formation, compensated by a higher catalyst addition and withdrawal required to maintain the HCK (residue conversion) catalyst activity." Catalyst deactivation modeling showed "the economical and operational benefits of recycling less than 5% of the unconverted residue, or better, and the removal of all the insoluble material from it" [211B071].

Slurry Process Conditions

For the slurry phase hydrocracking of Ural vacuum residue with crushed NiMo on alumina catalyst (less than 0.06 mm particle diameter, 260 m^2/g surface area and an average pore diameter of 7.4 nm) in an isothermal, continuous laboratory reactor at 806°F (430°C) and 16 MPa, increasing the catalyst concentration from 1 to 10 wt% increased conversion of asphaltenes and reduced Conradson carbon residue by only 4%. Hydrodesulfurization is strongly dependent upon catalyst concentration, increasing from 70% to 88% as catalyst concentration increased from 1 to 10 wt%. No increased in coke was observed since the residence time was too short [211B041].

The Ural vacuum residue had an initial boiling point of 761°F (405°C) and contained 11.6 wt% vacuum gas oil and 88.4 wt% vacuum resid and had a density at 68°F (20°C) of 960 kg/m^3. Heteroatom content was: 2.54 wt% sulfur, 0.53 wt% nitrogen, 150 ppmw vanadium and 45 ppmw nickel. Asphaltenes content was 5.24 wt% and the Conradson carbon residue was 15.8 wt%.

Liquid hourly space velocity strongly influenced the conversion of asphaltene and Conradson carbon residue but conversion of the vacuum residue was affected much. Hydrodesulfurization was affected even less. Gasoline composition was highly saturated (70.7-75.3 wt% paraffins, 11.9-9.5 wt% naphthenes, 15.8-16.4 wt% aromatics and 1.6-1.3 wt% olefins). Reducing the LHSV from 0.75 H^{-1} to 0.25 H^{-1} had the effects shown in Table 6.13 at 1 wt% catalyst concentration at the above temperature and pressure [211B041, 211B087].

Table 6.13
EFFECT OF LHSV ON SLURRY HYDROCRACKING OF URAL VACUUM RESIDUE

	0.75 H^{-1} LHSV	0.50 H^{-1} LHSV	0.25 H^{-1} LHSV
Vacuum residue conversion, %	40.9	61.6	88.7
Sulfur conversion, %	60.9	70.5	84.8
Asphaltene conversion, %	17.2	44.1	81.1
Conradson carbon residue conversion, %	18.6	45.9	82.5
Yields, wt% fresh feed			
C_1	0.30	0.40	0.66
C_2	0.58	0.81	1.37
C_3	1.02	1.45	4.43
C_4	1.31	1.94	3.14
Gasoline	4.2	5.2	7.6
Gas oil (Diesel)	16.4	22.0	34.6
Vacuum gas oil	23.9	34.3	38.1
Vacuum residue	52.2	33.9	10.0
Diesel Properties, wt%			
Density at 68°F (20°C), kg/m^3	850	852	850
Paraffins	71.9	70.2	70.5
Olefins	0.9	1.0	0.8
Naphthenes	4.3	4.8	3.9
Aromatics	22.9	24.0	24.8
Sulfur	0.33	0.31	0.30
Nitrogen	0.22	0.24	0.30
Gas Oil Properties, wt%			
Density at 68°F (20°C), kg/m^3	908	903	898
Sulfur	0.63	0.54	0.40
Nitrogen	0.49	0.52	0.53
Conradson carbon residue	0.43	0.19	0.18
Vacuum Residue Properties, wt%			
Density at 68°F (20°C), kg/m^3	957	969	---
Sulfur	1.50	1.46	1.28
Conradson carbon residue	24.4	25.0	26.9

Source: 211B041

Temperature also strongly affected conversion and product yields and properties (Table 6.14) with 1 wt% catalyst, 0.5 H-1 LHSV and 16 MPa hydrogen partial pressure. Gasoline composition was highly saturated (74.1-77.4 wt% paraffins, 8.7-9.7 wt% naphthenes, 12.9-15.8 wt% aromatics and 1.0-1.3 wt% olefins).

Hydrogen partial pressure had a minor influence on conversion and yields (Table 6.15) with 1 wt% catalyst, 0.5 H-1 LHSV and 806°F (430°C). Gasoline composition was highly saturated (72.5-75.3 wt% paraffins, 9.7-11.2 wt% naphthenes, 13.4-15.3 wt% aromatics and 1.2-1.7 wt% olefins) [211B041].

Table 6.14
EFFECT OF TEMPERATURE ON SLURRY HYDROCRACKING OF URAL VACUUM RESIDUE

	779°F (410°C)	806°F (430°C)	842°F (450°C)
Vacuum residue conversion, %	27.8	61.6	92.7
Sulfur conversion, %	51.8	70.5	91.0
Asphaltene conversion, %	13.8	44.1	83.5
Conradson carbon residue conversion, %	19.9	45.9	84.2
Yields, wt% fresh feed			
C_1	0.25	0.40	1.22
C_2	0.39	0.81	2.18
C_3	0.71	1.45	3.78
C_4	0.85	1.94	4.82
Gasoline	2.2	5.2	12.4
Gas oil (Diesel)	11.5	22.0	44.2
Vacuum gas oil	20.2	34.3	25.0
Vacuum residue	63.8	33.9	6.4
Diesel Properties, wt%			
Density at 68°F (20°C), kg/m^3	825	852	860
Paraffins	70.4	70.2	72.4
Olefins	1.1	1.0	0
Naphthenes	5.9	4.8	3.4
Aromatics	22.5	24.0	24.2
Sulfur	0.40	0.31	0.17
Nitrogen	0.22	0.24	0.32
Gas Oil Properties, wt%			
Density at 68°F (20°C), kg/m^3	898	903	910
Sulfur	0.77	0.54	0.32
Nitrogen	0.35	0.52	0.64
Conradson carbon residue	0.18	0.19	0.20
Vacuum Residue Properties, wt%			
Density at 68°F (20°C), kg/m^3	960	969	---
Sulfur	1.60	1.46	1.11
Conradson carbon residue	19.8	25.0	38.1

Source: 211B041

Table 6.15
EFFECT OF HYDROGEN PARTIAL PRESSURE ON SLURRY HYDROCRACKING OF URAL VACUUM RESIDUE

	12 MPa	16 MPa	18 MPa
Vacuum residue conversion, %	62.4	61.6	59.0
Sulfur conversion, %	69.1	70.5	71.9
Asphaltene conversion, %	38.9	44.1	49.4
Conradson carbon residue conversion, %	39.9	45.9	49.2
Yields, wt% fresh feed			
C_1	0.54	0.40	0.36
C_2	0.96	0.81	0.71
C_3	1.69	1.45	1.29
C_4	2.10	1.94	1.85
Gasoline	4.9	5.2	5.7
Gas oil (Diesel)	25.6	22.0	19.2
Vacuum gas oil	31.0	34.3	34.7
Vacuum residue	33.2	33.9	36.2
Diesel Properties, wt%			
Density at 68°F (20°C), kg/m^3	855	852	854
Paraffins	69.8	70.2	71.8
Olefins	1.0	1.0	0.9
Naphthenes	4.8	4.8	5.8
Aromatics	24.4	24.0	21.5
Sulfur	0.32	0.31	0.25
Nitrogen	0.23	0.24	0.25
Gas Oil Properties, wt%			
Density at 68°F (20°C), kg/m^3	903	903	903
Sulfur	0.68	0.54	0.57
Nitrogen	0.51	0.52	0.44
Conradson carbon residue	0.19	0.19	0.13
Vacuum Residue Properties, wt%			
Density at 68°F (20°C), kg/m^3	988	969	962
Sulfur	1.49	1.46	1.27
Conradson carbon residue	28.9	25.0	21.5

Source: 211B041

YIELDS

The yields obtained during a test run cracking a Middle East vacuum residue feedstock at the indicated operating conditions in a fixed bed residue hydrocracker are summarized in Table 6.16. This unit has a guard reactor that converted most of the nitrogen and sulfur of the feedstock to ammonia and hydrogen sulfide [211B199].

Table 6.16
CONDITIONS AND YIELD DATA ON HYDROCRACKING MIDDLE EAST RESIDUE

	Start of Run	End of Run
Reactor conditions		
Pressure, psia	3,000	3,000
Inlet temperature, °F (°C)	700 (371)	750 (399)
Outlet temperature, °F (°C)	750 (399)	800 (427)
Space velocity, V/V/hr	0.5	0.4
Feed		
Vacuum residue	1,025°F+ (552°C) TBP cut point	
BPSD	13,000	13,000
lbs/hr	190,266	190,266
Make up hydrogen		
Scf/B	1,290	1,875
Molecular weight	34	
Net separator gas (Recycle H_2)		
lbs/hr	Nil	2,405
Molecular weight		4.3
Cold flash gas (Cold drum gas)		
lbs/hr	3,772	5.569
Molecular weight	9.6	
Cold flash liquid (Cold drum liquid)		
lbs/hr	22,586	39,886
BPSD	1,852	3,321
Hot flash liquid		
lbs/hr	160,744	141,129
BPSD	11,672	10,280

Source: 211B199

Hydrocracking yields of atmospheric and vacuum residues from blends of Arabian Heavy and Arabian Light crude oil by the LC-FINING process are given in Table 6.17.

Table 6.17
RESID HYDROCRACKING YIELDS BY THE LC-FINING PROCESS

	Atmospheric Resid	Vacuum Resid		
Feed				
Gravity, API	12.40	4.73	4.73	4.73
Sulfur, wt%	3.90	4.97	4.97	4.97
Nickel, ppmw	18	39	39	39
Vanadium, ppmw	65	142	142	142
Conversion (1022°F+, 550°C+), vol%	45	60	75	95
Products, vol%				
C_4	1.11	2.35	3.57	5.53
C_5-350°F (177°C)	6.89	12.60	18.25	23.86
350-700°F {-650°F} (177-371°C, {-343°C})	{15.24}	30.62	42.65	64.81
700 {650}-1022°F (371 {343}-550°C)	{55.27}	21.46	19.32	11.92
1022°F+ (550°C+)	25.33	40.00	25.00	5.0
C_5+, API	23.7	22.5	26.6	33.3
C_5+ sulfur, wt%	0.54	0.71	0.66	0.33

Source: 211B288

Yields from hydrocracking Ural vacuum residue in a 34,000 B/D H-Oil unit are summarized in Table 6.18. Conversion varies seasonally from 52% in summer to 66% in winter. Diesel fuel yield ranges from 25 wt% to 29 wt% and increases with conversion. The catalyst usage at the higher conversion is lower since the required vacuum residue sulfur was less severe [211B176].

Table 6.18
URAL VACUUM RESIDUE YIELDS FROM H-OIL PROCESS

Feedstock	
Specific Gravity	1.010-1.020
Sulfur, wt%	3.2-3.3
Nitrogen, ppmw	6,500-6,700
Conradson Carbon Residue, wt%	16.7-18.5
Asphaltenes, wt%	6-9
Metals (Ni+V), ppmw	195-230
Viscosity at 212°F (100°C), cSt	1,000-1,200

Table 6.18 (Concluded)
URAL VACUUM RESIDUE YIELDS FROM H-OIL PROCESS

Operating Conditions		
Conversion, vol%	52	68
Feedrate, BPSD	34,000	34,000
Catalyst Addition Rate	Base	0.7 Base
Temperature	Base	Base + 14°F (+8°C)
Performance		
Hydrodesulfurization, wt%	81	82
Nitrogen removal, wt%	44	44
Conradson carbon residue conversion	57	59
Demetallization, wt%	73	88
Yields and Product Quality		
Diesel Fuel (356-698°F, 180-370°C), wt%	21	27
Sulfur, ppmw	800	1,200
Vacuum Gas Oil (698-1000°F, 370-538°C), wt%	17	31
Sulfur, ppmw	2,900	4,400
Nitrogen, ppmw	2,500	2,600
Vacuum Resid (1000°F+, 538°C+), wt%		
Sulfur, wt%	0.7	1.0
Conradson Carbon Residue, wt%	20	22

Source: 211B176

The yields of light gases (methane, ethane, propane and butane) from the slurry hydrocracking of an Ural vacuum residue with a NiMo on alumina catalyst (less than 0.06 mm particle diameter, 260 m^2/g surface area and an average pore diameter of 7.4 nm) and a "huge" excess of hydrogen (50 times stoichiometric H_2 consumption) were nearly equimolar. Changes in catalyst concentration in the slurry, operating temperature or LHSV did not change the ratio of components in the gas product [211B087].

DESIGN CONSIDERATIONS

Some elements of process design are briely discussed next, starting with reactors. Brief discussions of gas and liquid product separation and corrosion are followed by catalyst unloading and environmental considerations.

Reactors

The design of both trickle bed reactors or ebullated bed reactors is considerably more complicated than the design of a fixed bed gas reactor. Companies use their own proprietary design procedures they developed. Most of the time the design is made using models and correlations developed from previous experimental and commercial experiences [211B025].

Internals

The results of maldistribution of liquid across the fixed catalyst bed can be inefficient use of catalyst, as shown by lower apparent catalytic activity or shorter run length, and temperature maldistribution or a combination of these two. Severe temperature maldistribution can result in coking of a portion of the bed, which can be difficult to remove during catalyst replacement. Temperature differences within the bed can result in uncontrolled temperature excursions (runaways) [211B289].

Quench Zone

The heat of reaction must be removed to prevent temperature excursions and runaway. Without cooling, the reactor outlet temperature would greatly increase and increase the rate of undesirable reactions. These reactions lead to the formation of coke on the catalyst. High temperatures can also lead to reactor instabilities in the catalyst bed, particularly when liquid maldistribution exists. The acceptable temperature rise is a function of the process and design of the reactor vessel.

The simplest method, but not the most economical, of controlling the temperature is to use a series of single bed reactor vessels with quench, usually recycle gas, injected into the process line between reactors. To avoid large temperature gradients in the pipe (which would cause mechanical failure over time), an injection probe discharges the quench gas into the center of the pipe. A more economical method is to mix the quench gas with catalyst bed effluent and redistribute the liquid and gas in between multiple beds within the reactor vessel. The mixing of gas and liquid and thermal equilibration requires special internals design to avoid the formation of temperature gradients in the bed below. A variety of quench and redistribution internals have been designed. Basic design principles include:

- Reactor effluent from the bed above exits into a space between the beds.
- Cold gas or liquid is injected into the space between catalyst beds.
- Reactor effluent and quench fluid enters a device that induces a large amount of turbulence to promote the mixing of the streams to maximize temperature uniformity.
- The combined fluid leaves the mixing chamber and enters one or more distribution devices to distribute the liquid and gas evenly over the cross sectional area of the catalyst bed below the quench zone [211B289].

Gas Separation

The conditions for gas separation system are usually selected to meet the following three criteria:

- Minimize pressure drop of the hydrogen recycle loop
- Minimize coolant consumption (air or cooling water)
- Maximize recovery of light hydrocarbon from the oil.

For partially converted heavy feedstocks, the initial separation is done at high temperature, high pressure to remove the nondistillable heavy liquid and avoid possible separation problems. A low temperature, high pressure separator then follows. Low pressure separators or stripping columns may also be used to stabilize the liquid product. Since the vapor in these separators is released at low pressure, economics dictate whether the hydrogen from the vapor is recovered and recycled or, as usually the case, is vented to the refinery fuel gas system. The recycled

hydrogen may be amine treated (with monoethanolamine, MEA, or diethanolamine, DEA) to remove hydrogen sulfide [211B289].

Liquid Product Separation

The liquid product from the vapor-liquid separator is usually stabilized by removing dissolved light gases (hydrogen, H_2S, methane, ethane) and then fractionated. The fractionator product cut points are optimized to meet product specifications. The number of products of the main fractionator depends upon the refiner's objectives and process design. Propane and butanes may be recovered from the light ends by an additional fractionator. Propane and butanes may be recovered from the vent gas by a lean oil absorber. Naphtha may be separated into light and heavy naphthas by a naphtha splitter [211B289].

Corrosion

Corrosion considerations are important in hydrocracking, especially when hydrocracking residue feedstocks. Organic sulfur in the feed can cause corrosion at high temperatures of the feed heater. The rate of corrosion by organic sulfur compounds has a maximum as temperature rises. Some hydrocracker feedstocks contain naphthenic acids (indicated by high neutralization numbers) from the crude oil. The presence of acids affects the choice of metallurgy, especially hot, high pressure areas in the presence of fresh feed. The presence of hydrogen and H_2S at high temperatures in the hydrogen furnace, reactor and downstream separator can cause severe corrosion. The possibility corrosion by wet carbon dioxide must also be considered [211B289].

The combination of H_2S and ammonia in hydrocracker reactor effluent forms ammonium hydrosulfide (bisulfide), which causes serious corrosion below the dew point of water. When the effluent is cooled below 250°F (121°C), ammonium bisulfide salt forms. To prevent salt accumulation in the air coolers, water is injected before the deposition temperature is reached. The downstream equipment is then exposed to a sour alkaline solution with a high concentration of H_2S, ammonium bisulfide, and contaminants such as chloride, cyanide and dissolved oxygen. Some exchanger tubes can plug as a result of changes in feedstock, upset conditions or in the wash water injection. Sour water stripping is another location for the presence of ammonium hydrosulfide and possible corrosion. Corrosion occurs under the salt deposits and the unplugged tubes are subject to severe erosion-corrosion resulting from the higher tube flow rate. Critical factors in controlling this corrosion are symmetrical distribution piping of the air coolers and a reliable, effective water injection system [211B184].

Polythionic acids ($H_2S_xO_6$) are formed when equipment is opened to the atmosphere and moisture and oxygen combine with sulfur scale on the pipes. Polythionic acids cause stress corrosion of austenic (300 series) stainless steels under sensitizing conditions, which include the presence of H_2 and H_2S at elevated temperature, usually above 550°F (290°C). Some stabilized stainless steel grades contain trace elements (columbium or tungsten) that impart resistance to attack by polythionic acids. To protect even stabilized grades before opening to the atmosphere, washing with a dilute solution of soda ash is performed to neutralize the acids [211B289].

The evaluation and prediction of serviceability of structural elements under hydrocracking conditions is connected with the formation of hydrogen-induced cracks. The strength analysis and evaluation of service life includes the following stages:

1. Analysis of the operating conditions and possible causes of fracture;
2. Analysis of changes of the temperature and redistribution of hydrogen in the most dangerous sections of the structure for each mode: startup, nominal mode and shutdown both scheduled and emergency;

3. Investigation of the stress-strain state in the vicinity of defects and characterization;
4. Experimental evaluation of the characteristics of crack resistance of the material in hydrogen;
5. Investigation of the kinetics of fracture, i.e. subcritical crack growth in hydrogen containing media and evaluation of the residual service life of the structure on the basis of the data. However, the data on the kinetics of hydrogen-assisted crack growth in metals are limited and it is necessary to use theoretical approaches.

A proposed computational model allows the determination of the kinetics of crack growth in hydrogen, the residual service life of structural elements in hydrogen and the admissible sizes of detected defects from the viewpoint of their hydrogen-induced fracture and specified service life. [211B080].

Catalyst Unloading

Unloading coked catalyst requires special precautions to prevent iron sulfide combustion. Either cooling below 120°F (49°C) before dumping or maintaining the catalyst under an inert, nitrogen in containers until cooled is suggested [211B184].

Environmental Considerations

Besides hydrocarbon gases, hydrogen and H_2S from high pressure leaks, large quantities of carbon monoxide gas is released during catalyst regeneration and changeout. Steam stripping of the catalyst and regeneration generate waste streams containing sour water and ammonia [211B184].

7 VACUUM RESIDUE HYDROCRACKING ECONOMICS

In this section, we evaluate the process economics of a bitumen derived vacuum residue (VR) hydrocracking unit with an integrated hydrotreater to upgrade bitumen to synthetic crude oil (SCO). Vacuum gas oil and lighter effluent from the hydrocracker section is hydrotreated. The unit is designed to process 108,310 barrels per stream day (BPSD) or 97,479 barrels per calendar day (BPCD) of vacuum residue feedstock obtained from 200,000 BPSD of bitumen contained in 245,871 BPSD of Dilbit. Capacity is calculated using a 0.90 on stream factor. The hydrocracking section contains two identical trains. Hydrocracking capacity is limited by the maximum ebullating bed reactor size. The feedstock to the hydrotreater is supplemented with bitumen derived straight run naphtha (196 BPSD) plus atmospheric and vacuum gas oils (31,299 BPSD AGO, 60,135 BPSD VGO), the total production of these streams from the crude unit.

PROCESS DESCRIPTION

In this section, we describe an integrated hydrocracking-hydrotreating unit designed to hydrocrack and upgrade 108,310 BPSD of a vacuum residue derived from bitumen and to hydrotreat the VGO and lighter hydrocracker reactor product plus the vacuum gas oil and lighter liquid straight run products from the crude unit. Our design has a product capacity of 216,932 BPSD or 9,992 million mt/yr (22,029 million lb/yr) of synthetic crude oil (containing about 10 vol% vacuum residue). Without vacuum residue, which is common for light, sweet synthetic crude oil (SCO) [211B304], production is 195,464 BPSC or 9,003 million mt/yr (19,849 million lb/yr).

The hydrocracker is a high pressure (about 2,900 psig), single-stage process without oil recycle. Two reactor trains of 54,155 BPSD each are required due to the maximum size of the reactors. Each reactor train consists of three ebullated beds, essentially isothermal reactors with inter-stage stripping between the second and third reactors. To maintain activity and selectivity, fresh catalyst is intermittently to the beds and an equal volume of spent catalyst withdrawn. To enable the trains to be operated independently, each train also has its own feed furnaces, separators, heavy oil stripper and make-up compressor. Make-up hydrogen is 99.55 vol% pure. Recycle hydrogen is recovered and purified by an amine unit and by a membrane unit and combined with the make-up hydrogen for compression. Stripped heavy oil from both trains is charged to a common vacuum column to produce residue oil product. The lighter oils and gases flow to the common hydrotreater.

The hydrotreater is also a high pressure (about 2,600 psig), single stage process without heavy oil recycle. The VGO and lighter feedstock from the hydrocracker section is augmented with the straight run naphtha, AGO and VGO from the crude unit. All liquid feeds are mixed with hydrogen and heated in a furnace before being combined with hot vapor from the hydrocracking section. The reactor is a trickle bed having two catalyst beds with inter-bed quench hydrogen to control the temperature. Heat is recovered from the reactor effluent in a series of exchangers. A cold, high pressure separator produces the synthetic crude oil product. Vapors are amine treated at high pressure. To minimize the load of heavier hydrocarbons on the membrane hydrogen purification unit, we found it advantageous to absorb a portion of the heavier hydrocarbons in a portion of the hydrotreater's VGO fresh feed. These light hydrocarbons are steam stripped from

the VGO with the stripped vapor produced as fuel gas. Stripped light liquid is returned to the cold separator.

The process is based on the residue LC-Fining Process licensed by Chevron Lummus Global as applied to bitumen upgrading [211B185, 211B189, 211B190, 211B193, 211B288].

The process design and utility consumption rates used in this report are based on computations, published information, and non-confidential information from licensors and vendors. The design may or may not be similar to a licensed process or to processes otherwise in use today.

Table 7.1 lists the design bases and assumptions of the designs. Feedstock and liquid product characterizations are summarized in Table 7.2. Major process stream flows are summarized in Table 7.3. The process was modeled using Aspen Technology's Aspen™ Plus process simulator, version 11.1-0, built September 20, 2001. The physical properties method was the Redlich-Kwong Soave equation of state method. Major equipment is listed with size and materials of construction in Table 7.4. Similarly, utility requirements are summarized in Table 7.5

The bitumen vacuum residue oil upgrading process is divided into three sections:

- Hydrocracking Section (100)
- Hydrotreating Section (200)
- Train B Hydrocracking Reaction Section (300).

The flow diagram, Figure 7.1 (in Appendix E), shows the first two sections. The third section is the second reactor train (Train B) and is identical to the reactor section of the Hydrocracking Section (Train A).

Hydrocracking Section (100)

We only describe Train A of the hydrocracker reactor section since Train B is identical. Both trains feed a common vacuum tower, low pressure amine unit and the Hydrotreating Section.

Vacuum residue fresh feed from the crude unit or storage (not shown in Figure 7.1) is preheated in fired heater F-101 to 300°F (149°C). The feed is equally split between reactor Trains A and B, each with its own surge drum (V-101) to stabilize the flow to the feed pumps that bring the feed to 2945 psia. The feed is preheated by heat exchange (E-101) with stripper (C-102) overhead and brought to 675°F (357°C) by feed furnace F-102. Hydrogen is next injected into the fresh feed.

Hydrogen is heated in furnace F-103 and by exchange with stripper overhead vapor in E-102. Make-up hydrogen is compressed in three stages (K-101A, B, C) with inter-stage cooling (E-103 and E-104). Knockout drums (V-102, V-103, V-104) protect each compressor stage. Hydrogen recycle gas from the Hydrotreating Section (200) is combined with make-up hydrogen after the second stage compressor.

Hydrogen containing fresh feed enters the first of three hydrocracking reactors in series (R-101, R-102, R-103). An inter-stage stripper (C-101) between the second (R-102) and third (r-103) reactors removes lights and cools the second stage reactor effluent. The stripped liquid flows into the third reactor. Effluent from the inter-stage stripper and third reactor flows to the hot high pressure separator (V-105). The separator vapor flows to the Hydrotreating Section.

The liquid from separator V-105 is flashed from 2665 psia to 290 psia before entering steam stripper C-102. Light hydrocarbons are removed along with some H_2S and ammonia. The stripped liquid from both Trains A and B is combined and charged to the vacuum column, C-103.

Table 7.1
DESIGN BASES AND ASSUMPTIONS

Feedstock			
Hydrocracker Section	Bitumen derived vacuum residue		
Hydrotreater Section	Hydrocracked bitumen VGO and lighter plus fresh bitumen vacuum and atmospheric gas oils and naphtha		
Feedstock characterization	Please See Table 7.2		
Make-up H_2 supply pressure, psig	285		
Make-up H_2 purity, mol%/wt%	99.55/94.22		
H_2 recycle purity, mol%	97.74		
Reactor	**Hydrocracking**	**Hydrotreating**	**Overall**
	R-101 to R-103	**R-201**	
	R-301 to R-303		
Type	Ebullating Bed	Trickle Bed	
Flow	Co-current	Co-current	
Number of reactors (beds/reactor)	6 (1)	1 (2)	
Chemical H_2 consumption, SCF/B	2,443	---	1,546
Catalyst	NiMoP/alumina	NiMo/alumina	[211B015]
Fresh catalyst metals (Ni/Mo/P)	2.1/7.0/1.4	2.75/8.33/0	
Catalyst bulk density, lb/ft^3	50	50	
Reactor fill (bed 1/bed 2), bulk ft^3	11,950 each	14,600	
lb	597,500 each	730,000	
Bed expansion, %	20	---	
Catalyst life, years	Continuously replaced	2	
Sulfur reduction, wt%			90.5
Metals reduction, wt%			98
Catalyst make-up, lb/week	223,650	---	
Catalyst metals (Ni+V) loading, wt%	33	---	
Spent catalyst disposal, lb/week	297,500		
Reactor conditions			
Inlet/outlet pressure, psia	2,925/2,665	2,645/2,625	
Inlet/outlet temperature, °F (°C)	683 (362)/ 811 (433)	682 (361)	
Liquid Hourly Space Velocity, H^{-1}	1.06 per settled reactor; 0.35 over train	1.73	

Table 7.1 (Concluded)
DESIGN BASES AND ASSUMPTIONS

Reactor Yields, overall, wt%	**VR Fresh Feed**	**Total Feed**
Water		
Hydrogen sulfide	5.924	4.706
Ammonia	0.611	0.404
Hydrogen losses	0.150	0.150
Methane	0.922	0.545
Ethane	0.704	0.436
Propane	2.389	1.418
Butane	1.675	1.013
Naphtha	17.822	10.527
Kerosene	11.388	11.013
Diesel Fuel	23.669	22.891
VGO Prod	17.617	37.559
Resid Product	20.585	11.802
Coke	0.013	0.007
Total	103.467	102.471
Products		
Liquid products characterizations	Please See Table 7.2	
Spent wash water salt content, wt%		4
Vessels		
Surge + 0.5 full time, min		10
Tray sizing, % of flooding		80

Table 7.2
FEEDSTOCK AND PRODUCT CHARACTERIZATIONS

	Vacuum Residue	VGO	AGO	Naphtha	Synthetic Crude Oil
Gravity, API	1.07	15.4	25.4	67.4	28.6
Sulfur, ppmw	6.4 wt%	~4.0	~0.6	---	5,000
Nitrogen, ppmw	7,300			---	---
Conradson Carbon, wt%	23.3	---	---	---	---
Metals (Ni/V), ppmw	136/384	---	---	---	---
Distillation, TBP, °F (°C)					
T_{10}	1045 (563)	746 (397)	425 (218)	115 (46)	---
T_{30}	1100 (593)	787 (419)	512 (267)	130 (54)	---
T_{50}	1180 (634)	827 (442)	529 (276)	154 (68)	---
T_{60}	1230 (666)	856 (458)	538 (281)	217 (103)	---
T_{70}	---	884 (473)	553 (289)	245 (118)	---
T_{90}	---	940 (504)	590 (310)	360 (182)	---

Table 7.3
BITUMEN VACUUM RESIDUE HYDROCRACKING

STREAM FLOWS

CAPACITY: 108,310 BPSD (17,220 M^3/SD)
975°F+ (524°C+) VACUUM RESIDUE
AT 0.90 STREAM FACTOR

		Stream Flows, lb/Hr					
	Mol Wt	(1) Total Fresh Feed	(2) Fresh Feed to Train B	(3) Fresh Feed to Train A	(4) Hydrogen to Reactor Feed	(5) Total Make-up Hydrogen	(6) Make-Up Hydrogen to Train
Water	18.0						
Nitrogen	28.0				5,934	4,995	2,498
Hydrogen	2.0				39,890	83,204	41,602
Hydrogen sulfide	34.1						
Ammonia	17.0						
Methane	16.0				292	107	54
Ethane	30.1				92		
Propane	44.1				102		
Butane	58.1						
Naphtha	114.5						
Kerosene	180.1						
Diesel Fuel	239.0				1	1	1
VGO Product	369.4						
Resid Product	621.3						
Coke							
Naphtha Fresh Feed	95.5						
AGO Fresh Feed	206.8						
VGO Fresh Feed	379.7						
VR Fresh Feed	594.4	1,689,771	844,886	844,886			
Total, lb/hr		1,689,771	844,886	844,886	46,310	88,306	44,153
kg/hr		766,467	383,234	383,234	21,006	40,055	20,028
lb-mole/hr		2,843	1,421	1,421	20,023	41,459	20,730

Table 7.3 (Continued)
BITUMEN VACUUM RESIDUE HYDROCRACKING

STREAM FLOWS

CAPACITY: 108,310 BPSD (17,220 M^3/SD)
975°F+ (524°C+) VACUUM RESIDUE
AT 0.90 STREAM FACTOR

		Stream Flows, lb/Hr				
		(7)	(8)	(9)	(10)	(11)
	Mol Wt	Recycle Hydrogen	Reactor Feed	Inter-Stage Stripper Hydrogen	Hydrocracking Reactor Effluent	Hot High Pressure Separator Vapor
Water	18.0					
Nitrogen	28.0	7,893	5,912	2,534	8,446	8,153
Hydrogen	2.0	28,228	39,733	17,028	28,740	27,890
Hydrogen sulfide	34.1				50,047	46,737
Ammonia	17.0				5,164	4,824
Methane	16.0	636	393	168	8,346	7,965
Ethane	30.1	225	128	55	6,126	5,758
Propane	44.1	252	144	62	20,389	18,898
Butane	58.1				14,154	12,890
Naphtha	114.5				150,572	123,978
Kerosene	180.1				96,213	66,365
Diesel Fuel	239.0				199,974	103,922
VGO Product	369.4		15,089		148,845	30,337
Resid Product	621.3		829,796		173,917	1,477
Coke						
Naphtha Fresh Feed	95.5					
AGO Fresh Feed	206.8					
VGO Fresh Feed	379.7					
VR Fresh Feed	594.4					
Total, lb/hr		37,235	891,195	19,847	910,932	459,195
kg/hr		16,890	404,239	9,002	413,192	208,288
lb-mole/hr		14,338	21,374	8,551	21,129	19,109

Table 7.3 (Continued)
BITUMEN VACUUM RESIDUE HYDROCRACKING

STREAM FLOWS

CAPACITY: 108,310 BPSD (17,220 M^3/SD)
975°F+ (524°C+) VACUUM RESIDUE
AT 0.90 STREAM FACTOR

		Stream Flows, lb/Hr					
		(12)	(13)	(14)	(15)	(16)	(17)
	Mol Wt	Hot High Pressure Separator Liquid	Stripper Bottoms	Vacuum Residue Product	Hydrocracked Vacuum Gas Oil	Vacuum Column Overhead	Wet Gas
Water	18.0		22			5,543	
Nitrogen	28.0	293					
Hydrogen	2.0	849					
Hydrogen sulfide	34.1	3,310					
Ammonia	17.0	339					
Methane	16.0	380					
Ethane	30.1	368					
Propane	44.1	1,491					
Butane	58.1	1,264					
Naphtha	114.5	26,594	1			1	1
Kerosene	180.1	29,847	90		154	29	29
Diesel Fuel	239.0	96,051	16,871		34,000	24	24
VGO Product	369.4	118,508	90,347	6,258	174,755		
Resid Product	621.3	172,440	171,359	341,575	1,171		
Coke							
Naphtha Fresh Feed	95.5						
AGO Fresh Feed	206.8						
VGO Fresh Feed	379.7						
VR Fresh Feed	594.4						
Total, lb/hr		451,736	278,689	347,834	210,080	5,597	54
kg/hr		204,904	126,411	157,775	95,291	2,539	25
lb-mole/hr		2,020	581	561	600	308	0.30

Table 7.3 (Continued)
BITUMEN VACUUM RESIDUE HYDROCRACKING

STREAM FLOWS

CAPACITY: 108,310 BPSD (17,220 M^3/SD)
975°F+ (524°C+) VACUUM RESIDUE
AT 0.90 STREAM FACTOR

		Stream Flows, lb/Hr					
		(18)	(19)	(20)	(21)	(22)	(23)
	Mol Wt	Condensate	Stripper Overhead	Medium Low Pressure Separator Liquid	Medium Low Pressure Separator Gas	Water	Cold Low Pressure Separator Liquid
Water	18.0	47,543	17,978	510	1,405	16,063	2
Nitrogen	28.0		293	10	283		
Hydrogen	2.0		849	18	832		
Hydrogen sulfide	34.1		3,310	828	2,482		6
Ammonia	17.0		339	103	236		1
Methane	16.0		380	31	349		
Ethane	30.1		368	77	291		1
Propane	44.1		1,491	547	944		6
Butane	58.1		1,264	707	557		11
Naphtha	114.5		26,593	25,241	1,352		524
Kerosene	180.1		29,758	29,690	68		67
Diesel Fuel	239.0		79,181	79,165	16		16
VGO Product	369.4		28,160	28,160			
Resid Product	621.3		1,081	1,081			
Coke							
Naphtha Fresh Feed	95.5						
AGO Fresh Feed	206.8						
VGO Fresh Feed	379.7						
VR Fresh Feed	594.4						
Total, lb/hr		47,543	191,047	166,168	8,816	16,063	633
kg/hr		21,565	86,657	75,373	3,999	7,286	287
lb-mole/hr		2,639	2,438	883	664	892	6

Table 7.3 (Continued)
BITUMEN VACUUM RESIDUE HYDROCRACKING

STREAM FLOWS

CAPACITY: 108,310 BPSD (17,220 M^3/SD)
975°F+ (524°C+) VACUUM RESIDUE
AT 0.90 STREAM FACTOR

		Stream Flows, lb/Hr					
	Mol Wt	(24) Cold Low Pressure Separator Gas	(25) Low Pressure H2S	(26) Fuel Gas	(27) Hydrogen	(28) Naphtha Fresh Feed	(29) Atmospheric Gas Oil Fresh Feed Feed
Water	18.0	72	681				
Nitrogen	28.0	283		2,141	3,889		
Hydrogen	2.0	831		4,446	26,138		
Hydrogen sulfide	34.1	2,475	93,729				
Ammonia	17.0	162	9,112				
Methane	16.0	349		4,548	258		
Ethane	30.1	291		7,963	84		
Propane	44.1	938		25,696	94		
Butane	58.1	546		4,060			
Naphtha	114.5	828		2,728			
Kerosene	180.1	1		8			
Diesel Fuel	239.0			1			
VGO Product	369.4						
Resid Product	621.3						
Coke							
Naphtha Fresh Feed	95.5					2,031	
AGO Fresh Feed	206.8						411,292
VGO Fresh Feed	379.7						
VR Fresh Feed	594.4						
Total, lb/hr		6,776	103,523	51,591	30,465	2,031	411,292
kg/hr		3,073	46,957	23,401	13,819	921	186,559
lb-mole/hr		580	3,323	3,513	13,126	21	1,989

Table 7.3 (Continued)
BITUMEN VACUUM RESIDUE HYDROCRACKING

STREAM FLOWS

CAPACITY: 108,310 BPSD (17,220 M^3/SD)
975°F+ (524°C+) VACUUM RESIDUE
AT 0.90 STREAM FACTOR

		Stream Flows, lb/Hr					
	Mol Wt	(30) Vacuum Gas Oil Fresh Feed Feed	(31) Lean VGO to Absorber	(32) VGO	(33) Combined Fresh Feed	(34) Stripped VGO From Absorber	(35) Furnace Hydrogen
Water	18.0					76	
Nitrogen	28.0						2,723
Hydrogen	2.0						18,297
Hydrogen sulfide	34.1						
Ammonia	17.0						
Methane	16.0						181
Ethane	30.1						59
Propane	44.1					11	66
Butane	58.1					54	
Naphtha	114.5				2,031	344	
Kerosene	180.1				74,100	6	
Diesel Fuel	239.0				334,681	1	
VGO Product	369.4		203,063	613,152	615,664	202,571	
Resid Product	621.3		6,937	20,948	20,948	6,936	
Coke							
Naphtha Fresh Feed	95.5						
AGO Fresh Feed	206.8						
VGO Fresh Feed	379.7	844,100					
VR Fresh Feed	594.4						
Total, lb/hr		844,100	210,000	634,100	1,047,424	210,000	21,325
kg/hr		382,877	95,254	287,623	475,103	95,254	9,673
lb-mole/hr		2,223	553	1,670	3,680	561	9,188

Table 7.3 (Continued)
BITUMEN VACUUM RESIDUE HYDROCRACKING

STREAM FLOWS

CAPACITY: 108,310 BPSD (17,220 M^3/SD)
975°F+ (524°C+) VACUUM RESIDUE
AT 0.90 STREAM FACTOR

		Stream Flows, lb/Hr				
		(36)	(37)	(38)	(39)	(40)
	Mol Wt	Combined Hydrotreater Furnace Feed	Hydrotreater Feed	Quench Hydrogen	R-201 Reactor Effluent	Light Hydrocarbon Recycle
Water	18.0	1,101	1,101		1,101	10
Nitrogen	28.0	2,743	19,048	1,167	20,215	
Hydrogen	2.0	18,333	74,111	7,841	69,320	
Hydrogen sulfide	34.1	1,670	95,136		133,829	
Ammonia	17.0	208	9,855		11,680	
Methane	16.0	244	16,174	77	16,750	2
Ethane	30.1	214	11,729	25	12,726	12
Propane	44.1	1,184	38,976	28	40,418	146
Butane	58.1	1,492	27,268		28,804	276
Naphtha	114.5	53,995	301,860		304,744	426
Kerosene	180.1	133,878	266,502		325,103	1
Diesel Fuel	239.0	527,067	734,605		675,789	
VGO Product	369.4	1,049,182	1,109,666		1,095,359	492
Resid Product	621.3	31,206	34,142		13,476	1
Coke						
Naphtha Fresh Feed	95.5					
AGO Fresh Feed	206.8					
VGO Fresh Feed	379.7					
VR Fresh Feed	594.4					
Total, lb/hr		1,822,516	2,740,174	9,139	2,749,314	1,366
kg/hr		826,679	1,242,922	4,146	1,247,068	620
lb-mole/hr		15,808	54,020	3,938	52,959	15

Table 7.3 (Continued)
BITUMEN VACUUM RESIDUE HYDROCRACKING

STREAM FLOWS

CAPACITY: 108,310 BPSD (17,220 M^3/SD)
975°F+ (524°C+) VACUUM RESIDUE
AT 0.90 STREAM FACTOR

		Stream Flows, lb/Hr				
	Mol Wt	(41) Cold High Pressure Separator Feed	(42) Synthetic Crude Oil	(43) Cold High Pressure Separator Vapor	(44) High Pressure H_2S	(45) Absorber Feed
Water	18.0	1,112	363	337	337	
Nitrogen	28.0	20,215	1,575	18,640		18,640
Hydrogen	2.0	69,320	2,782	66,538		66,538
Hydrogen sulfide	34.1	133,829	88,794	45,035	45,035	
Ammonia	17.0	11,680	8,961	2,720	2,720	
Methane	16.0	16,752	3,849	12,902		12,902
Ethane	30.1	12,738	7,381	5,357		5,357
Propane	44.1	40,564	32,651	7,912		7,912
Butane	58.1	29,080	26,852	2,228		2,228
Naphtha	114.5	305,170	304,202	968		968
Kerosene	180.1	325,104	325,097	7		7
Diesel Fuel	239.0	675,789	675,788	1		1
VGO Product	369.4	1,095,850	1,095,850			
Resid Product	621.3	13,477	13,477			
Coke						
Naphtha Fresh Feed	95.5					
AGO Fresh Feed	206.8					
VGO Fresh Feed	379.7					
VR Fresh Feed	594.4					
Total, lb/hr		2,750,680	2,587,622	162,645	48,091	114,554
kg/hr		1,247,687	1,173,726	73,775	21,814	51,961
lb-mole/hr		52,974	16,569	36,383	1,500	34,883

Table 7.3 (Continued)
BITUMEN VACUUM RESIDUE HYDROCRACKING

STREAM FLOWS

CAPACITY: 108,310 BPSD (17,220 M^3/SD)
975°F+ (524°C+) VACUUM RESIDUE
AT 0.90 STREAM FACTOR

		Stream Flows, lb/Hr					
		(46)	(47)	(48)	(49)	(50)	(51)
	Mol Wt	Rich VGO	VGO Stripper Overhead	Fuel Gas	Absorber Overhead	Fuel Gas	H_2 Rich Gas
Water	18.0		1,924	23			14,002
Nitrogen	28.0	68	68	68	18,572	2,786	
Hydrogen	2.0	119	119	118	66,420	9,963	
Hydrogen sulfide	34.1						
Ammonia	17.0						
Methane	16.0	174	174	172	12,729	11,456	
Ethane	30.1	350	350	338	5,007	4,556	
Propane	44.1	1,604	1,593	1,446	6,308	5,804	
Butane	58.1	1,306	1,253	977	922	922	
Naphtha	114.5	968	624	198			
Kerosene	180.1	7	1				
Diesel Fuel	239.0	1					
VGO Product	369.4	203,063	492				
Resid Product	621.3	6,937	1				
Coke							
Naphtha Fresh Feed	95.5						
AGO Fresh Feed	206.8						
VGO Fresh Feed	379.7						
VR Fresh Feed	594.4						
Total, lb/hr		214,597	6,597	3,341	109,957	35,486	14,002
kg/hr		97,340	2,992	1,515	49,876	16,096	6,351
lb-mole/hr		706	257	136	34,730	6,055	777

Table 7.3 (Concluded)
BITUMEN VACUUM RESIDUE HYDROCRACKING

STREAM FLOWS

CAPACITY: 108,310 BPSD (17,220 M^3/SD)
975°F+ (524°C+) VACUUM RESIDUE
AT 0.90 STREAM FACTOR

		Stream Flows, lb/Hr	
		(52)	(53)
	Mol Wt	Cold High Pressure Separator Liquid	Synthetic Crude Oil
Water	18.0	538	2
Nitrogen	28.0	1,575	
Hydrogen	2.0	2,782	
Hydrogen sulfide	34.1	88,773	21
Ammonia	17.0	8,788	173
Methane	16.0	3,849	
Ethane	30.1	7,381	
Propane	44.1	23,817	8,835
Butane	58.1	2,966	23,885
Naphtha	114.5	1,069	303,133
Kerosene	180.1	6	325,090
Diesel Fuel	239.0	1	675,788
VGO Product	369.4		1,095,850
Resid Product	621.3		13,477
Coke			
Naphtha Fresh Feed	95.5		
AGO Fresh Feed	206.8		
VGO Fresh Feed	379.7		
VR Fresh Feed	594.4		
Total, lb/hr		141,545	2,446,254
kg/hr		64,204	1,109,602
lb-mole/hr		5,675	10,903

Table 7.4
BITUMEN VACUUM RESIDUE HYDROCRACKING PROCESS

MAJOR EQUIPMENT

CAPACITY: 20,295 MILLION LB/YR (9,210,000 T/YR)
SYNTHETIC CRUDE OIL
AT 0.90 STREAM FACTOR

EQUIPMENT NUMBER	NAME	SIZE		MATERIAL OF CONSTRUCTION	REMARKS
REACTORS					
R-101	EBULLATED BED REACTOR 1	119,158	GAL	SHELL: 2.25CR-1MO	13'-0" ID, 14'-0" OD X 120'-0" T-T
R-102	EBULLATED BED REACTOR 2	119,158	GAL	SHELL: 2.25CR-1MO	13'-0" ID, 14'-0" OD X 120'-0" T-T
R-103	EBULLATED REACTOR 3	119,158	GAL	SHELL: 2.25CR-1MO	13'-0" ID, 14'-0" OD X 120'-0" T-T
R-201	HYDROTREATING REACTOR	119,156	GAL	SHELL: 2.25CR-1MO	13'-0" ID, 14'-0" OD X 120'-0" T-T
R-301	EBULLATED REACTOR 1	119,158	GAL	SHELL: 2.25CR-1MO	13'-0" ID, 14'-0" OD X 120'-0" T-T
R-302	EBULLATED REACTOR 2	119,158	GAL	SHELL: 2.25CR-1MO	13'-0" ID, 14'-0" OD X 120'-0" T-T
R-303	EBULLATED REACTOR 3	119,158	GAL	SHELL: 2.25CR-1MO	13'-0" ID, 14'-0" OD X 120'-0" T-T
COLUMNS					
C-101	INTER-STAGE STRIPPER	8.5	FT DIA	SHELL: 2.25CR-1MO	16 VALVE TRAYS, 24 INCH SPACING
		32	FT	TRAYS: C.S.	
C-102	STRIPPER COLUMN	6	FT DIA	SHELL: 1.25CR-0.5MO	16 VALVE TRAYS, 24 INCH SPACING
		32	FT	TRAYS: C.S.	
C-103	VACUUM COLUMN	8, 25, 9.5	FT DIA	SHELL: C.S.; 1.25CR-0.5MO	24 VALVE TRAYS, 24 INCH SPACING
		12, 48, 24	FT	TRAYS: C.S.; 1.25CR-0.5MO	16 VALVE TRAYS, 36 INCH SPACING
C-201	ABSORBER	5	FT DIA	SHELL: C.S.	10 VALVE TRAYS, 24 INCH SPACING
		20	FT	TRAYS: C.S.	
C-202	VGO STRIPPER	3.5	FT DIA	SHELL: C.S.	12 VALVE TRAYS, 24 INCH SPACING
		24	FT	TRAYS: C.S.	
C-203	SCO FRACTIONATOR	15.5, 17.5	FT DIA	SHELL: C.S.; 1.25CR-0.5MO	14 VALVE TRAYS, 24 INCH SPACING
		28, 31	FT	TRAYS: C.S.; 1.25CR-0.5MO	10 VALVE TRAYS, 36 INCH SPACING (NOT SHOWN)
C-301	INTER-STAGE STRIPPER	4	FT DIA	SHELL: 2.25CR-1MO	4 VALVE TRAYS, 24 INCH SPACING
		10	FT	TRAYS: C.S.	
C-302	STRIPPER COLUMN	6	FT DIA	SHELL: 1.25CR-0.5MO	16 VALVE TRAYS, 24 INCH SPACING
		32	FT	TRAYS: C.S.	
COMPRESSORS					
K-101A,B	H2 MAKE-UP COMPRESSOR	7,102	BHP	C.S.	
K-102A,B	MAKE-UP H2, STAGE 2	7,101	BHP	C.S.	
K-103A,B	MAKE-UP H2, STAGE 3	7,110	BHP	C.S.	
K-301A,B	H2 MAKE-UP COMPRESSOR	7,102	BHP	C.S.	
K-302A,B	MAKE-UP H2, STAGE 2	7,102	BHP	C.S.	
K-303A,B	MAKE-UP H2, STAGE 3	7,045	BHP	C.S.	
HEAT EXCHANGERS					
E-101A,B	FEED-STRIPPER OVERHEAD	8,000	SQ FT	SHELL: C.S.	
		22.84	MMBTU/HR	TUBES: 2.25CR-1MO	
E-102	H2-STRIPPER OVERHEAD	6,500	SQ FT	SHELL: 2.25CR-1MO	
		31.65	MMBTU/HR	TUBES: C.S.	
E-103	MAKE-UP H2 AIR COOLER	7,300	SQ FT	SHELL: C.S.	
		32.88	MMBTU/HR	TUBES: C.S.	
E-104	MAKE-UP H2 AIR COOLER	7,000	SQ FT	SHELL: C.S.	
		31.42	MMBTU/HR	TUBES: C.S.	
E-105	C-103 PUMP-AROUND 1	4,100	SQ FT	SHELL: C.S.	
		14.23	MMBTU/HR	TUBES: C.S.	

Table 7.4 (Continued)
BITUMEN VACUUM RESIDUE HYDROCRACKING PROCESS

MAJOR EQUIPMENT

CAPACITY: 20,295 MILLION LB/YR (9,210,000 T/YR)
SYNTHETIC CRUDE OIL
AT 0.90 STREAM FACTOR

EQUIPMENT NUMBER	NAME	SIZE		MATERIAL OF CONSTRUCTION	REMARKS
HEAT EXCHANGERS (CONCLUDED)					
E-106	C-103 PUMP-AROUND 2	7,100	SQ FT	SHELL: C.S.	
		62.60	MMBTU/HR	TUBES: C.S.	
E-107	C-103 PUMP-AROUND 3	0	SQ FT	SHELL: C.S.	
		0	MMBTU/HR	TUBES: C.S.	
E-108	EJECTOR COOLER 1	1,400	SQ FT	SHELL: C.S.	
		23.5	MMBTU/HR	TUBES: C.S.	
E-109	EJECTOR COOLER 2	550	SQ FT	SHELL: C.S.	
		17.12	MMBTU/HR	TUBES: C.S.	
E-110	EJECTOR COOLER 3	550	SQ FT	SHELL: C.S.	
		17.12	MMBTU/HR	TUBES: C.S.	
E-111	MED. LOW PRES. SEP. FEED	2,250	SQ FT	SHELL: C.S.	
		18.10	MMBTU/HR	TUBES: C.S.	
E-112	MED. LOW PRES. SEP. AIR	500	SQ FT	SHELL: C.S.	
		2.12	MMBTU/HR	TUBES: C.S.	
E-113	MED. LOW PRES. SEP. COOLE	500	SQ FT	SHELL: C.S.	
		0.3	MMBTU/HR	TUBES: C.S.	
E-201	VGO HEATER	1,400	SQ FT	SHELL: C.S.	
		3.61	MMBTU/HR	TUBES: C.S.	
E-202A-G	LT HC-R-201 EFFLUENT	10,000	SQ FT	SHELL: C.S.	
		55.7	MMBTU/HR	TUBES: 1.25CR-0.5MO	
E-203	R-201 EFFLUENT BOILER	7,000	SQ FT	SHELL: 1.25CR-0.5MO	
		187.3	MMBTU/HR	TUBES: C.S.	
E-204A,B	R-201-VGO STRIPPER EXCHANGER	6,750	SQ FT	SHELL: C.S.	
		27.6	MMBTU/HR	TUBES: C.S.	
E-205A-F	R-201 EFFLUENT BOILER	10,000	SQ FT	SHELL: C.S.	
		62.8	MMBTU/HR	TUBES: C.S.	
E-206A-D	R-201 EFFLUENT COOLER	9,264	SQ FT	SHELL: C.S.	
		24.24	MMBTU/HR	TUBES: C.S.	
E-207	VGO STRIPPER CONDENSER	500	SQ FT	SHELL: C.S.	
		3.8	MMBTU/HR	TUBES: C.S.	
E-208	SCO FRACTIONATOR P/A COOLER	8,350	SQ FT	SHELL: C.S.	(NOT SHOWN)
		8.67	MMBTU/HR	TUBES: C.S.	
E-209	SCO FRACTIONATOR CONDENSER	1,100	SQ FT	SHELL: C.S.	(NOT SHOWN)
		2.23	MMBTU/HR	TUBES: C.S.	
E-301A,B	FEED-STRIPPER OVERHEAD	8,000	SQ FT	SHELL: C.S.	
		22.84	MMBTU/HR	TUBES: 2.25CR-1MO	
E-302	H2-STRIPPER OVERHEAD	6,500	SQ FT	SHELL: 2.25CR-1MO	
		31.65	MMBTU/HR	TUBES: C.S.	
E-303	MAKE-UP H2 AIR COOLER	7,300	SQ FT	SHELL: C.S.	
		32.88	MMBTU/HR	TUBES: C.S.	
E-304	MAKE-UP H2 AIR COOLER	7,000	SQ FT	SHELL: C.S.	
		31.42	MMBTU/HR	TUBES: C.S.	
E-311	MED. LOW P. SEP. FEED	2,250	SQ FT	SHELL: C.S.	
		18.10	MMBTU/HR	TUBES: C.S.	
E-312	MED. LOW P. SEP. AIR	500	SQ FT	SHELL: C.S.	
		2.12	MMBTU/HR	TUBES: C.S.	
E-313	MED. LOW P. SEP. COOLER	500	SQ FT	SHELL: C.S.	
		0.3	MMBTU/HR	TUBES: C.S.	
PROCESS FURNACES					
F-101	FEED PREHEATER	93.92	MMBTU/HR	C.S.	NATURAL GAS
F-102	FEED HEATER	139.1	MMBTU/HR	316 SS	NATURAL GAS
F-103	H2 HEATER	30.2	MMBTU/HR	316 SS	NATURAL GAS
F-201	HYDROTREATER FEED HEAT	41	MMBTU/HR	316 SS	NATURAL GAS

Table 7.4 (Concluded)
BITUMEN VACUUM RESIDUE HYDROCRACKING PROCESS

MAJOR EQUIPMENT

CAPACITY: 20,295 MILLION LB/YR (9,210,000 T/YR)
SYNTHETIC CRUDE OIL
AT 0.90 STREAM FACTOR

EQUIPMENT NUMBER	NAME	SIZE		MATERIAL OF CONSTRUCTION	REMARKS
PROCESS FURNACES (CONCLUDED)					
F-202	REBOILER HEATER	768.6	MMBTU/HR	316 SS	NATURAL GAS (NOT SHOWN)
F-302	FEED HEATER	139.1	MMBTU/HR	316 SS	NATURAL GAS
F-303	H2 HEATER	30.2	MMBTU/HR	316 SS	NATURAL GAS
TANKS					
T-101	VACUUM RESIDUE FEED	600,000	GAL	C.S.	3 HOUR SUPPLY
T-201	NAPHTHA FRESH FEED	1,100	GAL	C.S.	3 HOUR SUPPLY
T-202	AGO FRESH FEED TANK	170,000	GAL	C.S.	3 HOUR SUPPLY
T-203	VGO FRESH FEED TANK	320,000	GAL	C.S.	3 HOUR SUPPLY
T-204	RESIDUE PRODUCT TANK	120,000	GAL	C.S.	3 HOUR PRODUCTION
T-205	SYNTHETIC CRUDE OIL	1,250,000	GAL	C.S.	3 HOUR PRODUCTION
PRESSURE VESSELS					
V-101	FEED SURGE DRUM	9,501	GAL	C.S.	
V-102	COMPRESSOR KO DRUM 1	4,500	GAL	C.S.	
V-103	COMPRESSOR KO DRUM 2	1,200	GAL	C.S.	
V-104	COMPRESSOR KO DRUM 3	1,200	GAL	C.S.	
V-105	HOT HIGH PRESSURE SEPERATOR	15,100	GAL	2.25CR-1MO	
V-106	SEAL DRUM	1,000	GAL	C.S.	
V-107	MEDIUM LOW PRESSURE SEPARATOR	12,250	GAL	C.S.	
V-108	COLD LOW PRESSURE SEPARATOR	700	GAL	C.S.	
V-201	COLD HIGH PRESSURE SEPARATOR	76,100	GAL	C.S.	
V-202	LOW PRESSURE SEPARATOR	650	GAL	C.S.	
V-203	SCO FRACATIONATOR RECEIVER	21,250	GAL	C.S.	(NOT SHOWN)
V-301	FEED SURGE DRUM	9,501	GAL	C.S.	
V-302	COMPRESSOR KO DRUM 1	4,500	GAL	C.S.	
V-303	COMPRESSOR KO DRUM 2	1,200	GAL	C.S.	
V-304	COMPRESSOR KO DRUM 3	1,200	GAL	C.S.	
V-305	HOT HIGH PRESSURE SEP	15,100	GAL	2.25CR-1MO	
V-307	MEDIUM LOW PRESSURE SEPARATOR	12,250	GAL	C.S.	
V-308	COLD LOW PRESSURE SEPARATOR	700	GAL	C.S.	
MISCELLANEOUS EQUIPMENT					
M-101A-C	EJECTORS			C.S, ALLOY NOZZLES	
PACKAGE UNITS					
G-101A,B	CATALYST HANDLING	4500 FT3/WEEK		CATALYST	
G-102	LOW PRESSURE AMINE UNIT			C.S.	
G-201	HIGH PRESSURE AMINE UNIT			C.S.	
G-202	RECYCLE H2 PURIFICATION UNIT			C.S.	
G-203	INITIAL CATALYST FILL	14,600 FT3		CATALYST	

PUMPS

SECTION	OPERATING	SPARES	OPERATING BHP
100	54	9	4,189
200	42	10	4,634
300	32	3	2,695

Table 7.5
BITUMEN VACUUM RESIDUE HYDROCRACKING PROCESS

UTILITIES SUMMARY

CAPACITY: 19,286 MILLION LB/YR (8,750,000 T/YR)
SYNTHETIC CRUDE OIL
AT 0.90 STREAM FACTOR

	UNITS	BATTERY LIMITS TOTAL	SECTION 100	SECTION 200	SECTION 300
COOLING WATER	GPM	98,006	46,898	50,756	352
ELECTRICITY	KW	114,578	64,264	9,188	41,126
NATURAL GAS	MM BTU/HR	2,027	351	1,450	226
STEAM, 50 PSIG	M LB/HR	670	276	394	--
STEAM, 150 PSIG	M LB/HR	2	--	2	--
STEAM, 600 PSIG	M LB/HR	36	18	--	18
STEAM, 50 PSIG	M LB/HR	-341	--	-341	--
STEAM, 600 PSIG	M LB/HR	-168	--	-168	--
PEAK DEMANDS					
COOLING WATER	GPM	117,607	56,278	60,907	422
ELECTRICITY	KW	115,755	65,441	9,188	41,126
STEAM, 50 PSIG	M LB/HR	804	331	473	--
STEAM, 150 PSIG	M LB/HR	2	--	2	--
STEAM, 600 PSIG	M LB/HR	43	22	--	22

The vacuum tower is equipped with three pump-around coolers (E-105, E-106, E-107). Gs containing steam and a small flow of lower boiling gas oil components leaves the tower top through a three stage ejector system (M-101, M-102, M-103) with inter-stage cooling (E-108, E-109, E-110). The cooled ejector effluent flows to the seal drum (V-106) where wet gas is separated from condensate. The vacuum residue product is pumped outside the boundary limit for processing or to storage.

A side stream of vacuum gas oil is drawn from the vacuum tower and flows to the Hydrotreating Section.

Stripper C-102 overhead vapors are cooled by heat exchange in parallel exchangers and with the VR fresh feed (E-101) and with hydrogen (E-102). The stripper gas is then cooled to 200F (93C) by cooler E-111 and enters medium temperature, low pressure separator V-107.

Separator V-105 removes stripper water from the vapors and hydrocarbon liquid, which is pumped to the Hydrotreating Section. Vapors are condensed first in air cooler E-112 and then in trim cooler E-113. Upon flashing to 100 psia, the stream enters separator V-108.

Vapor and non-condensable gases from V-108 in both Trains A and B (V-308) flow to the common low pressure amine unit, G-102, along with vapors from the SCO fractionator in Section 200. Hydrogen sulfide is sent offsite to the refinery sulfur unit. The hydrocarbon rich gas is sent to the refinery fuel gas system.

Hydrotreating Section (200)

The feedstock to the common, integrated hydrotreating section consists of streams from the Hydrocracking Section (both Sections 100 and 300) plus additional fresh gas oil and naphtha feedstocks from the crude unit. Streams from the Hydrocracking Sections (100 and 300) are:

1. Hot, high pressure separator (V-105 and V-305) vapor
2. Liquid from the medium temperature, low pressure separator (V-107 and V-307)
3. Cold, low pressure separator (V-108) liquid
4. Vacuum column gas oil (C-103)

Additional fresh feedstock is supplied from the atmospheric and vacuum crude units:

5. Naphtha
6. Atmospheric gas oil
7. Vacuum gas oil

A slip stream of fresh vacuum gas oil is heated by steam (E-201) and charged to absorber C-201. This VGO returns from the VGO stripper, C-202, and is combined with hydrotreater feedstocks 2 through 7.

Steams 2 through 7, as listed above, are combined as shown in the flowsheet (Figure 7.1, Sheet 2) and hydrogen is injected before preheating by heat exchange (E-202) with hydrotreater reactor effluent. The stream is then heated in feed heater F-201 to provide a reactor inlet temperature of 682°F (361°C) when combined with feedstock 1 (in the above list), the vapor from V-105 and V-305. The reactor (R-201) is a trickle bed reactor containing two catalyst beds with inter-bed hydrogen injection to control the temperature and maintain hydrogen partial pressure. The reactor effluent is first cooled in steam boiler E-203. The effluent is further cooled by heat exchange with rich VGO absorbent (E-204) from absorber C-201 and with the cold hydrotreater

feedstock (E-202). More heat is recovered from the effluent by generating 50 psig steam (E-205). The effluent is finally cooled to 100°F (38°C) by cooler E-206.

Vapor is separated from the liquid in the cold, high pressure separator (V-201). The vapor from V-201 is amine treated to remove H_2S in the high pressure amine unit, G-201. Some LPG and heavier hydrocarbons are recovered from the hydrogen rich gas by absorption into fresh VGO (C-201). The rich VGO is reduced in pressure and heated by exchange with the reactor effluent (E-204). Absorbed hydrocarbons are released from the VGO by steam stripping (C-202). The steam stripper overhead is condensed (E-207) and the gas separated (V-202) and sent to the refinery fuel gas system. The recovered liquid is pumped back to V-201.

The hydrogen rich gas is absorbed to ease the load of the hydrogen purification unit, G-202. The now purified recycle hydrogen is split and charged equally to the third stage of the make-up hydrogen compressors, K-101C and K-301C, in the Hydrocracking Sections (100 and 300).

The liquid from V-201 is fractionated in C-203 (not shown in Figure 7.1), which was added to remove excessive C_3 and lighter hydrocarbons and dissolved H_2S, ammonia and water from the SCO product. The fractionator contains a pump-around exchanger (E-208). Overhead vapors are partially condensed (E-209) in receiver V-203. All the liquid is pumped back to the column as reflux. Water flows to the refinery oily water sewer system. The gases flow to the low pressure amine unit (G-102) in Section 100 where H_2S (and ammonia and water in our simulation) is removed and the hydrocarbons flow to the refinery fuel gas system. The fractionator has a fired reboiler (F-202). The bottoms product is the SCO.

Hydrocracking Section (300)

Reactor Train B comprises this section. It is identical to Train A from V-301 (identical to V-101) through C-302 (identical to C-102) and V-307 (V-107). Maximum ebullated bed reactor size limits the throughput and necessitates two reactor trains.

PROCESS DISCUSSION

The on stream factor of 0.90 is used due to the relatively few plants built to process bitumen and the well known problems of handling heavy oils handling.

The design is not fully optimized, especially for energy utilization. Our goal is to derive a reasonable process for cost estimating within our ±25% accuracy. The model should be considered as a preliminary design that should serve as a good starting point for performing more detailed process design. Hydrocracker units are customized to meet feedstock flexibility, catalyst conditions and owner preferences. Process licensors and contractors have decades of general experience to draw upon in designing specific plants.

The basic design of the bitumen hydrocracker with integrated hydrotreater is generally based on Chevron Lummus Global reported information for their LC-Fining technology [211B185, 211B189, 211B190, 211B193, 211B288].

Feedstock

The feedstock to the hydrocracking section is vacuum residue derived from Steam Assisted Gravity Drainage Athabasca bitumen. The feedstock to the hydrotreating section is hydrocracked bitumen VGO and lighter cuts plus fresh straight run bitumen vacuum and atmospheric gas oils and naphtha.

The feedstock is characterized in Table 7.2 and is based on properties reported in [211B190] augmented by our material balances of that data with distillation curves from another

literature source ([211B175]) and by our best estimates using characterization of Cold Lake Blend heavy crude oil's fractions as a guide.

Hydrocracking Sections (100 and 300)

The reactors of the hydrocracker section are ebullated bed reactors, the largest currently feasible for this pressure and temperature. The vessel is 13 ft inside diameter, 14 ft-3 in outside diameter, by 120 ft tall tangent-to-tangent (T-T). This type of reactor is essentially an isothermal reactor with internal circulation of oil and suspended catalyst promoted by the circulation pump.

The hydrocracker catalyst is assumed to be a NiMoP on alumina catalyst of bulk density of 50 lb/ft^3. Make-up catalyst is periodically added to maintain activity and selectivity and an equal volume of the coked, metals containing spent catalyst is assumed removed. Make-up catalyst rate is determined by the nickel plus vanadium loading, assumed to be 33%. The spent catalyst is assumed to contain 98 wt% of the feedstock metals. The spent catalyst will also contain coke in addition to the metals. The coke was assumed to be 1.20 wt% of the VR fresh feed (23.3 wt% Conradson carbon content), which is likely too high and the C_1-C_3 yields correspondingly too low since the sum of these products was calculated from published C_4+ liquid yields [211B190].

Our simulation modeled the reactor yields as a block composed of the three hydrocracker reactors and inter-stage stripper. Yields of the individual reactors were not estimated due to lack of data. The distribution of denitrogenation is assumed between the hydrocracker and hydrotreater.

The stripper (C-102) makes the cut between the VGO and heavier and lighter fractions. Steam from the stripper is assumed to condense and wash out ammonium salt from the downstream exchangers. Steam condensate is mostly separated in V-107, with more removed by V-108. Since our simulation is not specially programmed to model the washing of ammonia, ammonia is found in higher amounts than expected downstream.

In our simulation, the vacuum column (C-103) separates VGO from the residue oil is sensitive to its feed composition. For example, reducing the make-up hydrogen rate caused the column to not converge at any reasonable pressure (down to 1 mmHg was tried).

Hydrotreating Section (200)

The conditions given are generally for the start-of-run. At end-of-run conditions, the reactor inlet temperatures will have been raised to the maximum. The reactor pressure drops are often larger than at the start of run.

The yields of the hydrotreater products from the additional bitumen gas oils and small amount of naphtha are estimated, guided by gas oil and naphtha yields reported in the literature [211B303] and PEP Report 214A "Heavy Oil Hydrotreating," (2007). The actual yields bitumen oils may be quite different.

Since the separation of H_2S and light gases in the cold, high pressure separator (V-201) is poor at these conditions, fractionator C-203 and associated equipment is added (not shown in Figure 7.1). C_3 and lighter gases are sent to the low pressure amine unit (G-102) in Section 100. The treated hydrocarbons are sent to the refinery fuel gas system.

Hydrogen System

Make-up hydrogen supplied is assumed to be vendor provided 99.55 mol% pure hydrogen at 112°F (44°C) and 300 psia. The hydrogen is assumed to be made by steam methane reforming with pressure swing adsorption purification. Make-up hydrogen replaces hydrogen

consumed by reaction to form H_2S and ammonia and to saturate aromatics as well as losses through venting to the fuel gas system and small leaks. Our make-up hydrogen rate is about 7.5 wt% higher than the 77,300 lb/H calculated from information supplied by Chevron Lummus Global in [211B190], probably due to higher losses to fuel gas.

Each train has its own hydrogen compressors to increase reliability and safety. It is assumed reciprocating compressor units are used whose cost includes lubricating systems and controls.

The compressors are generally sized for start-of-run (SOR) conditions. At the end-of-run (EOR), the pressure drop across the hydrotreater reactor could well be higher, resulting in lower pressure in the stripper column and the gas recovery train to the amine unit. Alternatively, the hydrotreater may be designed to initially operate at lower pressure.

The recycle hydrogen purification mentioned by Chevron Lummus Global is an undisclosed type of membrane system [211B185]. In general, membrane hydrogen purification can operate up to about 1800 psia (124 bar) and produce purified hydrogen very near to its feed pressure [211B302]. The separation we assumed is influenced by pressure swing adsorption separation (at much lower pressure). In particular, the nitrogen in the recycle hydrogen stream may well be too high for a membrane separator. Since we were not able in our simulation to find conditions that minimized the loading of heavier hydrocarbons on the purification system, we added the VGO absorber step.

Materials of Construction

The presence of H_2S and H_2 requires chrome-molybdenum or stainless steel clad vessels and exchanger shells and stainless steel exchanger tubes. The reactors and down stream vessels and exchanger shells that operate above 500°F (260°C) are either 2¼ Cr 1 Mo or 1¼ Cr ½ Mo. Stainless steel is used for the furnace tubes. The piping around the reactors is also Cr-Mo steel. Unless noted in the equipment list (Table 7.4), all other equipment is carbon steel.

Waste Treatment and Disposal

Wastes from the plant include sour water, sour gas and spent catalyst. H_2S is recovered by amine scrubbing. The H_2S rich streams from the amine units are sent to the refinery's sulfur recovery unit, typically a Claus-type process with tail gas treater, for recovery as elemental sulfur. Sulfur recovery is reviewed in PEP Report 216 "Acid Gas Treatment and Sulfur Recovery" (1997). The sour water is treated and the ammonia recovered. Oily condensate is sent to the refinery's gravity settler (API settler). Oil is recovered and the water is further purified in the refinery's wastewater treatment system.

The U.S. Environmental Protection Agency now lists hydrotreating catalysts (and likely spent hydrocracker catalysts) as Hazardous Wastes (K171 and K172). Some European agencies are reviewing the disposal of spent hydrotreating catalyst [211B301]. Landfilling is increasingly becoming unattractive. Spent hydrotreater catalyst is usually sent to a metals reclaimer for processing to recover the valuable metals, as discussed in PEP Report 214 "Heavy Oil Hydrotreating" (2007), which is the option we assume.

COST ESTIMATES

We present here the capital investment and production cost estimates for hydrocracking vacuum residue to produce synthetic crude oil. Allowance for interest on funds spent during construction is not included (i.e. overnight construction). The location is the U.S. Gulf Coast. Construction begins in the second quarter of 2007.

Equipment costs and production costs are estimated primarily using the PEP COST database, version 3.1.5, developed by PEP [PEP Report 162].

Capital Costs

Capital costs at a PEP Cost Index of 768 (mid 2007) are developed for hydrocracking 108,310 BPSD of a vacuum residue feedstock derived from bitumen.

Table 7.6 shows the Total Fixed Capital (TFC) investment is $1,376.7 million. The Battery Limits Investment (BLI), which includes PEP's contingency of 15%, is $1,029.2 million. The Battery Limits Installed cost is $894.95 million. This installed cost includes $71.9 million for the initial reactor fill of the catalysts. The investment cost of the amine unit only includes the absorption and amine regeneration section [PEP Report 216]. The sulfur recovery sections are excluded since the refinery's existing Claus unit is assumed to be used.

For the hydrocracking section alone (Sections 100 plus 300), the Battery Limits Investment of $801 million or 7,400 $/B of vacuum residue fresh feed compares favorably with a published estimate of $782 million or 7,220 $/B for a residue cracking LC-Fining hydrocracker in 2007 after adjusting conversion to 80% or 20.585 wt% residue (7,000 $/B at 25 wt% residue product, 8,000 $/B at 5 wt% residue product) [211B288].

The off-sites utility and tankage investment is $37.4 million. Allotments for general services and waste treatment bring the total offsites investment to $347.5 million including a 15% contingency. The costs of each section are shown in Table 7.7.

As discussed in Section 4, the price of catalysts can vary widely with the cost of the metals. The cost of the second batch of catalyst is included as an operating materials expense. For our estimate, the hydrocracking catalyst is priced at $18.50/lb and the hydrotreating catalyst at $7.65/lb determined from the cost of metals plus a base charge of $4.25/lb.

The BLI costs in Table 7.6 include factors for indirect costs and unscheduled equipment. Indirect costs include such items as equipment rental (scaffolding and lifting for example), testing, freight, and sales taxes and insurance. The indirect cost also includes labor overhead expenses, engineering and contractor's profit. Indirect costs are discussed in Appendix B. We apply the unscheduled equipment allowance factor of 10% to the sum of equipment cost, direct installation costs, package unit costs and indirect costs. Licensing or royalty fees are regarded as proprietary and are not included in these costs.

Off-site utilities and tankage installed investments totaled about $37.4 million. Of this total, tankage for three hours feedstock and three hours production cost $0.79 million. Some tankage is required for handling upsets and for good product quality control. For one day supply and production of each feedstock and product, tankage investment would rise to $141.5 million.

An allowance of $213.3 million is made for investment in general services facilities, which includes items such as roads, parking, fences, administrative offices, craft shops, fire and safety equipment, plant communications and warehouses. A $51.46 million allowance is made for investments expanding or providing waste treatment facilities. The off-sites investment totals $347.5 million with the inclusion of the general services facilities, waste treatment investments and 15% contingency.

The BLI in Tables 7.6 and 7.7 include PEP's contingency of 15% for established refinery processes. The process licensor and some engineering contractors have experience building heavy oil hydrocrackers. With a 25% contingency, the BLI of the unit becomes $1,118.7 million and the TFC rises to $1,524.4 million with an off-sites investment of $405.7 million.

Table 7.6
BITUMEN VACUUM RESIDUE HYDROCRACKING PROCESS

TOTAL CAPITAL INVESTMENT

CAPACITY: 19,286 MILLION LB/YR (8,750,000 T/YR)
SYNTHETIC CRUDE OIL
AT 0.90 STREAM FACTOR

PEP COST INDEX: 768

	COST ($1,000)	CAPACITY EXPONENT UP	CAPACITY EXPONENT DOWN
BATTERY LIMITS EQUIPMENT, F.O.B.			
REACTORS	149,916	0.95	0.95
COLUMNS	4,073	1.31	0.81
VESSELS & TANKS	10,898	1.15	0.87
HEAT EXCHANGERS	9,273	0.96	0.84
FURNACES	32,716	0.89	0.89
COMPRESSORS	63,268	0.87	0.95
MISCELLANEOUS EQUIPMENT	12	0.60	0.60
PUMPS	10,987	0.85	0.76
TOTAL	281,143	0.94	0.92
DIRECT INSTALLATION COSTS	158,157	0.92	0.83
PACKAGE UNIT	109,317	0.64	0.59
PACKAGE UNIT II	9,674	0.57	0.48
INITIAL CATALYST FILL	71,900	1.00	1.00
INDIRECT COSTS	183,404	0.84	0.79
UNSCHEDULED EQUIPMENT, 10%	81,359	0.87	0.82
BATTERY LIMITS, INSTALLED	894,954	0.87	0.82
CONTINGENCY, 15%	134,243	0.87	0.82
BATTERY LIMITS INVESTMENT	1,029,200	0.87	0.82
OFF-SITES, INSTALLED			
CLARIFIED WATER	3,010	0.74	0.74
COOLING WATER	19,340	0.92	0.95
PROCESS WATER	1,688	0.62	0.62
BOILER FEED WATER	3,643	0.44	0.41
STEAM	8,920	0.95	0.95
TANKAGE	794	0.64	0.63
UTILITIES & STORAGE	37,395	0.85	0.85
GENERAL SERVICE FACILITIES	213,318	0.87	0.82
WASTE TREATMENT	51,460	0.87	0.82
TOTAL	302,174	0.87	0.83
CONTINGENCY, 15%	45,326	0.87	0.83
OFF-SITES INVESTMENT	347,500	0.87	0.83
TOTAL FIXED CAPITAL	1,376,700	0.87	0.83

Table 7.7
BITUMEN VACUUM RESIDUE HYDROCRACKING PROCESS

CAPITAL INVESTMENT BY SECTION

CAPACITY: 19,286 MILLION LB/YR (8,750,000 T/YR)
SYNTHETIC CRUDE OIL
AT 0.90 STREAM FACTOR

PEP COST INDEX: 768

	HYDROCRACKING			HYDROTREATING			TRAIN B		
	COST ($1,000)	CAPACITY EXPONENT UP	CAPACITY EXPONENT DOWN	COST ($1,000)	CAPACITY EXPONENT UP	CAPACITY EXPONENT DOWN	COST ($1,000)	CAPACITY EXPONENT UP	CAPACITY EXPONENT DOWN
BATTERY LIMITS EQUIPMENT, F.O.B.									
REACTORS	64,290	0.95	0.94	21,336	0.95	0.96	64,290	0.95	0.94
COLUMNS	2,784	1.50	0.83	891	0.87	0.84	397	0.85	0.62
VESSELS & TANKS	2,271	1.46	0.83	6,374	0.90	0.90	2,253	1.47	0.84
HEAT EXCHANGERS	1,931	0.92	0.75	5,822	0.97	0.89	1,519	0.94	0.79
FURNACES	7,357	0.82	0.82	19,686	0.94	0.94	5,674	0.82	0.82
COMPRESSORS	31,634	0.87	0.95	--	--	--	31,634	0.87	0.95
MISCELLANEOUS EQUIPMENT	12	0.60	0.60	--	--	--	--	--	--
PUMPS4,869	0.86	0.76	3,580	0.84	0.76	2,537	0.85	0.76	
TOTAL	115,149	0.94	0.92	57,690	0.93	0.92	108,304	0.93	0.93
DIRECT INSTALLATION COSTS	66,341	0.91	0.83	36,065	0.92	0.76	55,751	0.93	0.87
PACKAGE UNIT	69,000	0.60	0.60	40,317	0.72	0.56	--	--	--
PACKAGE UNIT II	9,612	0.57	0.48	62	0.60	0.56	--	--	--
INITIAL CATALYST FILL	33,150	1.00	1.00	5,600	1.00	1.00	33,150	1.00	1.00
INDIRECT COSTS	85,345	0.81	0.76	40,666	0.83	0.72	57,392	0.89	0.87
UNSCHEDULED EQUIPMENT, 10%	37,860	0.84	0.80	18,040	0.86	0.76	25,460	0.93	0.91
BATTERY LIMITS INSTALLED	416,456	0.84	0.80	198,440	0.86	0.76	280,058	0.93	0.91
CONTINGENCY, 15%	62,468	0.84	0.80	29,766	0.86	0.76	42,009	0.93	0.91
BATTERY LIMITS INVESTMENT	478,924	0.84	0.80	228,206	0.86	0.76	322,067	0.93	0.91
OFFSITES, INSTALLED									
CLARIFIED WATER	1,427	0.74	0.74	1,567	0.74	0.74	16	0.74	0.74
COOLING WATER	9,255	0.92	0.95	10,016	0.92	0.95	69	0.92	0.95
PROCESS WATER	808	0.62	0.62	874	0.62	0.62	6	0.62	0.62
BOILER FEED WATER	1,580	0.42	0.38	1,596	0.58	0.58	468	0.00	0.00
STEAM8,656	0.95	0.95	264	0.95	0.95	--	--	--	
TANKAGE	758	0.65	0.65	37	0.31	0.31	--	--	--
UTILITIES & STORAGE	22,483	0.87	0.86	14,354	0.85	0.86	559	0.17	0.11

Production Costs

Table 7.8 shows our production cost estimate for a 108,310 BPSD bitumen vacuum residue hydrocracking unit with integrated hydrotreater along with an estimate for a 54,155 BPSD unit having two identical hydrocracking trains. The base case is the maximum plant size for two trains. The feedstock, product and utility values are based on mid-year 2007 prices for the U.S. Gulf Coast. The VR feedstock value was determined to be 12.34 ¢/lb (1.100 $/gal or 46.205 $/B). The product SCO was valued as Syncrude Sweet Blend at 24.71 ¢/lb (1.819 $/gal or 76.384 $/B). In the table, all variable costs are expressed as ¢/lb of the FCC feedstock product. Gross raw materials cost 20.00 ¢/lb. The hydrocracking catalyst is continually replaced. The cost of a replacement batch of hydrotreating catalyst is included assuming a two year catalyst life. By-products and utilities (steam) generated are shown as credits (negative). The by-product credit is -0.84 ¢/lb due to the fuel gases. No value was given to the H_2S streams. Net total utilities cost 0.93 ¢/lb. Variable costs total 20.09 ¢/lb.

Labor costs are based upon 4 operators per shift (one control room, three outside) at the total compensation rate, including benefits, of $42.54/H. Maintenance labor is estimated as 3%/yr of battery limits investment. Since many of the analyses are derived from the online control instrumentation, control laboratory labor is estimated at 20% of direct operating labor costs. Labor costs total 0.17 ¢/lb.

Maintenance materials are estimated at 3%/yr of the battery limits investment; operating supplies at 10% of operating labor costs. Adding maintenance materials and supplies to the variable materials and labor costs produces a total direct operating cost of 20.42 ¢/lb or 63.122 $/B of SCO.

Our production cost estimates includes charges for plant overhead (80% of labor costs), property taxes and insurance (2%/yr of total fixed cost) and depreciation (10%/yr, straight line). Adding the overhead and taxes and insurance costs to the total direct operating cost gives a plant cash cost of 20.70 ¢/lb. Depreciation further adds 0.71 ¢/lb to bring the plant gate cost to 21.41 ¢/lb or 66.183 $/B.

General and administrative expenses (G&A), sales, and research and development (R&D) expenses add 0.25 ¢/lb since the product is a commodity sold on contract or on the spot market in well established international markets. With G&S, sales and R&S expenses, the net production cost is 21.66 ¢/lb or 66.955 $/B.

With a before tax return on investment (ROI) of 42.7%, total product value of the SCO is 24.71 ¢/lb or 76.384 $/B, the average market price in June and July 2007. With a before tax return on investment (ROI) of 25%, a frequently used project screening value, the total product value of the SCO is 23.42 ¢/lb or 72.396 $/B.

Economy of scale benefits the product value as illustrated in Table 7.8 comparing the cases of units of one-half of the capacity to the base case unit. The one half capacity costs in Table 7.8 are calculated assuming the cost of each piece of equipment is scaled up or down according to its exponent. Since the reactor sizes are the maximum and the base case is two identical trains, the one half capacity unit's cost can alternatively be achieved by using a single hydrocracking reactor train and scaling down the previously common equipment. This results in a BLI of $582.6 million for the hydrocracking section (100) and $134.8 million for the hydrotreating section (200). Offsites are the same, $195.5 million. The TFC then is $912.8 million, which is higher than the $777.1 million estimate for two scaled down trains. The 1.5 times base capacity case in Table 7.8 is calculated for adding a third hydrocracking reactor train, adding an additional hydrotreating reactor of half capacity and increasing the size of the common equipment.

Table 7.8
BITUMEN VACUUM RESIDUE HYDROCRACKING PROCESS

PRODUCTION COSTS

PEP COST INDEX: 768

VARIABLE COSTS

	UNIT COST	CONSUMPTION PER LB	¢/LB
RAW MATERIALS			
VACUUM RESIDUE FRESH FEED	12.34 ¢/LB	0.690759 LB	8.52
H2, 99 VOL%	0.0031 ¢/LB	0.036098 LB	NEGL
NAPHTHA	28.16 ¢/LB	0.00083 LB	0.02
ATMOSPHERIC GAS OIL	18.3 ¢/LB	0.168131 LB	3.08
VACUUM GAS OIL	20.4 ¢/LB	0.345058 LB	7.04
HYDROCRACKING CATALYST	1,850 ¢/LB	0.000718 LB	1.33
HYDROTREATING CATALYST	765 ¢/LB	0.000017 LB	0.01
GROSS RAW MATERIALS			20.00
BY-PRODUCTS			
LP FUEL GAS (26)	653 ¢/MMBTU	-0.00046 MMBTU	-0.30
HP FUEL GAS (50)	653 ¢/MMBTU	-0.000402 MMBTU	-0.26
FUEL GAS (48)	653 ¢/MMBTU	-0.0000279 MMBTU	-0.02
RESIDUE OIL	12.34 ¢/LB	-0.02109 LB	-0.26
TOTAL BY-PRODUCTS			-0.84

	UNIT COST	CONSUMPTION PER LB	CONSUMPTION PER KG	
UTILITIES				
COOLING WATER	10.87 ¢/MGAL	2.4 GAL	20.1 LITERS	0.03
STEAM, 150 PSIG	8.32 $/MLB	0.0816 LB	0.0816 KG	0.07
ELECTRICITY	6.1 ¢/KWH	0.0468 KWH	0.103 KWH	0.29
NATURAL GAS	6.53 $/MMBTU	829 BTU	460 KCAL	0.54
TOTAL UTILITIES				0.93

Table 7.8 (Concluded)
BITUMEN VACUUM RESIDUE HYDROCRACKING PROCESS

PRODUCTION COSTS

PEP COST INDEX: 768

CAPACITY (MILLION LB/YR)*	**9,643**	**19,286#**	**28,929**
INVESTMENT ($ MILLIONS)			
BATTERY LIMITS (BLI)	581.3	1029.2	1494.2
OFFSITES	195.8	347.5	494.8
TOTAL FIXED CAPITAL (TFC)	777.1	1376.7	1988.7
SCALING EXPONENTS		0.83	0.87
PRODUCTION COSTS (¢/LB)			
RAW MATERIALS	20.00	20.00	20.00
BY-PRODUCTS	-0.84	-0.84	-0.84
UTILITIES	0.93	0.93	0.93
VARIABLE COSTS	20.09	20.09	20.09
OPERATING LABOR, 4/SHIFT, $42.54/HR	0.02	0.01	0.01
MAINTENANCE LABOR, 3%/YR OF BLI	0.18	0.16	0.15
CONTROL LAB LABOR, 20% OF OPER LABOR	NEGL	NEGL	NEGL
LABOR COSTS	0.20	0.17	0.16
MAINTENANCE MATERIALS, 3%/YR OF BLI	0.18	0.16	0.15
OPERATING SUPPLIES, 10% OF OPER LABOR	NEGL	NEGL	NEGL
TOTAL DIRECT COSTS	20.47	20.42	20.40
PLANT OVERHEAD, 80% OF LABOR COSTS	0.16	0.14	0.13
TAXES AND INSURANCE, 2%/YR OF TFC	0.16	0.14	0.14
PLANT CASH COSTS	20.79	20.70	20.67
DEPRECIATION, 10%/YR OF TFC	0.81	0.71	0.69
PLANT GATE COSTS	21.60	21.41	21.36
G&A, SALES, RESEARCH	0.25	0.25	0.24
NET PRODUCTION COST	21.85	21.66	21.60
ROI BEFORE TAXES, 42.7%/YR OF TFC	3.44	3.05	2.94
PRODUCT VALUE	25.29	24.71	24.54

* OF SYNTHETIC CRUDE OIL
# BASE CASE

As a result of the economy of scale, the half size plant in Table 7.8 for a 42.7% ROI requires a SCO product value of 25.29 ¢/lb, which is 0.58 ¢/lb higher than the base case plant. Similarly, the 1.5 times larger capacity plant requires only 24.54 ¢/lb or 0.17 ¢/lb less than the base case to achieve the same ROI.

Profitability

The value of synthetic crude oil not containing residue was 24.71 ¢/lb or 76.384 $/B (Table 7.8). With this product value, the before tax return on investment (ROI) is 42.7% for the base capacity plant, considerably greater than the 25% frequently used to screen projects for profitability. The TFC used in this calculation is based on a 15% contingency factor. Using a 25% contingency factor, the higher TFC reduces the ROI to 37.1%, still a favorable value.

The effect of the value of the hydrocracking catalyst on profitability is:

	Hydrocracking Catalyst, ¢/lb	% ROI
Base Case	1,850	42.7
50% reduction	925	52.1
50% increase	2,775	33.5

Holding the feedstock and other product values constant, the effect of the SCO product market value on profitability is shown in Table 7.9. A spread of 11.08 ¢/lb is required for a 25% ROI.

Table 7.9
EFFECT OF SCO MARKET VALUE ON PRETAX ROI

SCO Market Value, ¢/lb	Spread (SCO-VR[a]), ¢/lb	% ROI
24.71 (Base Case)	12.37	42.7
24.15	11.81	35.0
23.79	11.45	30.0
23.42	11.08	25.0
22.78	10.44	16.0
22.24	9.90	8.5
21.63	9.29	0

[a] 12.34 ¢/lb vacuum residue value.

8 ATMOSPHERIC RESIDUE HYDROCRACKING ECONOMICS

In this section, we evaluate the process economics of a bitumen derived atmospheric residue (AR) hydrocracking unit with an integrated hydrotreater to produce synthetic crude oil (SCO). Gas oil and lighter effluent from the hydrocracking section is hydrotreated in a conventional fixed bed reactor. The process features a slurry reactor using dried, pulverized limonite dispersed in the feedstock as the catalyst in an essentially once-through mode. The catalyst adsorbs the heavy metals and coke. Spent catalyst is concentrated in the residue oil product. The unit is designed to process 55,000 barrels per stream day (BPSD) or 49,500 barrels per calendar day (BPCD) of AR feedstock. Reactor capacity is calculated using a 0.90 on stream factor. Single reactor hydrocracking capacity appears to be limited by the maximum reactor size. The process has not been commercialized, but has been operated for over 1,500 hours in a 3 B/D demonstration unit [211B217].

PROCESS DESCRIPTION

In this section, we describe an integrated hydrocracking-hydrotreating unit designed to hydrocrack and upgrade 55,000 BPSD of an atmospheric residue derived from bitumen and to hydrotreat the gas oil and lighter hydrocracker reactor products. Our design has a product capacity of 56,692 BPSD or 2.550 million mt/yr (5,622 million lb/yr) of (SCO) without residue, which is common for light, sweet SCO [211B304]. Production with resid added back would require filtering the resid to remove the slurry catalyst, which is not included in our design.

The hydrocracker is a moderately high pressure (about 1,435 psig), single-stage process with recycle of clarified residue oil, a recycle ratio of 19% recycle oil is used. To maintain activity and selectivity, fresh catalyst is continually mixed with the fresh and recycle feedstocks. The Make-up hydrogen (99.9 vol% pure) is combined with the feedstock. The slurry is reacted in a slurry reactor with recycle hydrogen added at two elevations to control the temperature and maintain excess hydrogen. Recycle hydrogen is recovered and purified by an amine unit.

The integrated hydrotreater is a two-stage, fixed bed process that also operates at a moderately high pressure (about 1,410 psig in the first stage, 1360 psig in the second stage). The reactors are trickle beds having two catalyst beds per reactor with inter-bed quench recycle hydrogen to control the temperature. Heat is recovered from the reactor effluents in a series of exchangers. A heavy oil product is separated from the first stage reactor effluent. The vapors are further hydrotreated in the second stage. Second stage vapors are amine treated at high pressure. The second stage hydrotreated liquid is reduced in pressure and fractionated to separate LPG rich overhead, which is amine treated, from gas oil and lighter liquid bottoms product that is combined with the heavy oil from the first stage.

The process is based on the KOBELCO Slurry-Phase Hydrocracking process being developed by Kobe Steel Ltd. [211B175, 211B217]. The process originally was developed for hydrocracking brown coal. The process has not been commercialized, but has been operated for over 1,500 hours in a 3 B/D demonstration unit [211B217].

The process design and utility consumption rates used in this report are based on computations, published information, and non-confidential information from licensors and vendors. The design may or may not be similar to a licensed process or to processes otherwise in use today.

Table 8.1 lists the design bases and assumptions of the designs. Feedstock and liquid product characterizations are summarized in Table 8.2. Major process stream flows are summarized in Table 8.3. The process was modeled using Aspen Technology's Aspen™ Plus process simulator, version 11.1-0, built September 20, 2001. The physical properties method was the Redlich-Kwong Soave equation of state method. Major equipment is listed with size and materials of construction in Table 8.4. Similarly, utility requirements are summarized in Table 8.5

The process flow diagram, Figure 8.1 (in Appendix E), for the bitumen atmospheric residue oil upgrading process is divided into two sections:

- Hydrocracking Section (100)
- Hydrotreating Section (200)

Hydrocracking Section (100)

Warm atmospheric residue fresh feed from the crude unit or storage (not shown in Figure 8.1) is mixed with limonite hydrocracking catalyst pneumatically conveyed from catalyst handling unit G-101 (not shown) and recycle oil in stirred tank V-101. The mixture is pumped and combined with make-up hydrogen from a two-stage compressor (K-101A and K-101B). The make-up compressor is equipped with knockout drums V-102 and V-103 and inter-stage cooler E-102. The hydrogen containing mixture is then heated in feed heater F-101. Additional make-up hydrogen is heated in the convection section of F-101 and combined with the hot oil. As the feed flows up through the slurry hydrocracking reactor (R-101), recycle hydrogen is injected at two elevations.

The reactor effluent is separated in hot, high pressure separator V-104. Vapor flows to the hydrotreating section (200). Liquid and the solid catalyst flow out the bottom. A slip stream of decanted oil is pumped to the hydrotreating section (we added this stream control the oil recycle rate). The liquid is flashed to 10 psia and charged to vacuum separators V-105 and V-106 (We cooled V-106). A portion of the catalyst and liquid flows to V-108, the toluene insolubles (coke) separator, while the other portion bypasses this separator and is recycled to V-101. In V-108, the catalyst is decanted and discharged with the residue oil. The clarified overhead oil is recycled to the catalyst fresh feed mixer, V-101.

The vapor from V-105 and V-106 is partially condensed by heat exchange with recycle hydrogen from Section 200 in E-102 and then by trim cooler E-103. Vapor and liquid are separated in cold vacuum separator V-107. Steam ejector M-101 draws gas from V-107. The steam is condensed in cooler E-104, the condensate flowing to seal drum V-109 while the gas is vented. Hydrocarbon liquid from V-107 is pumped to Section 200 for hydrotreating.

Hydrotreating Section (200)

Hot vapor and liquid from Hydrocracking Section 100 are combined with hot make-up hydrogen from E-201 and charged to the first stage hydrotreating reactor R-201. R-201is a trickle bed reactor containing two catalyst beds with inter-bed cooling with recycle hydrogen. Reactor effluent flows to the hot, high pressure separator V-201. Liquid is cooled, first by heat exchange with make-up gas in E-201 and then by steam boiler E-202. The cooled liquid is flashed. Cold, high pressure separator V-202 separates off gas from the heavy oil liquid product.

Table 8.1
DESIGN BASES AND ASSUMPTIONS

Feedstock			
Hydrocracker Section	Bitumen derived atmospheric residue		
Hydrotreater Section	Hydrocracked bitumen VGO and lighter		
Feedstock characterization	Please See Table 8.2		
Make-up H_2 supply pressure, psig	285		
Make-up H_2 purity, mol%/wt%	99.90/98.63		
H_2 recycle purity, mol%	91.86		
Reactor	**Hydrocracking**	**Hydrotreating**	**Overall**
	R-101	**R-201//R-202A,B**	
Type	Upflow Slurry	Trickle Bed	
Flow	Co-current	Co-current	
Number of reactors (beds/reactor)	1 (0)	1 (2)//2(2)	
Chemical H_2 consumption, SCF/BFF	890	814/282	1,986
Catalyst	Limonite	NiMo/alumina	[211B015]
Fresh catalyst metals (Ni/Mo)	---	2.75/8.33	
Catalyst bulk density, lb/ft^3	Assumed 50	43.7	
Reactor fill (Stage 1/Stage 2), bulk ft^3	---	12,865//25,735	
lb		562,250// 1,124,500	
Catalyst life, years	Continuously replaced	2	
Sulfur reduction, wt%	60.1	96.46//99.93	
Metals reduction, wt%	98+	---	98+
Catalyst make-up, lb/week	3,108,000 dry	---	
Catalyst metals (Ni+V) loading, wt%	1.25	---	
Reactor conditions			
Inlet/outlet pressure, psia	1,483/1,450	//	
Inlet/outlet temperature, °F (°C)	836 (447)/ 842 (450)	655(346)/674(357)//673(356)/647(342)	
Liquid Hourly Space Velocity, H^{-1}	1 hour residence time	1.0//0.5	

Table 8.1 (Concluded)
DESIGN BASES AND ASSUMPTIONS

Reactor Yields, overall,	wt% fresh feed	wt% feed	wt% FD
Water	0.30	0.375//0.04	
Hydrogen sulfide	3.26	1.667//0.02	
Ammonia	Include in H_2S	0.531//in H_2S	
Methane	0.31	0.0201//0.0073	
Ethane	0.63	0.0482//0.0145	
Propane	1.57	0.0604//0.0363	
Butane	4.38	0.0483//0.1018	
Naphtha	14.13	15.7604//20.23	
Kerosene	18.35	25.6458//44.41	
Heavy Diesel Fuel	21.10	27.3229//35.87	
VGO Prod	33.29	29.9688//0	
Resid Product	4.00	0//0	
Coke	---	---	
Total	101.32	101.448//100.73	
Products			
Liquid products characterizations	Please See Table 8.2		
Spent wash water salt content, wt%			4
Vessels			
Surge + 0.5 full time, min			10
Tray sizing, % of flooding			80

Table 8.2
FEEDSTOCK AND PRODUCT CHARACTERIZATIONS

	Atmospheric Residue	Residue	Synthetic Crude Oil
Gravity, API	6.7	2.5	32.4
Sulfur, ppmw	5.013 wt%		0.35
Nitrogen, ppmw	0.4444 wt%		---
Microcarbon Residue, wt%	14.30		---
Metals (Ni/V), ppmw	86.8/232		---
Ash, wt%	0.45		---
Distillation, TBP, °F (°C)			
T_{10}	700 (371)	1070 (577)	267 (131)
T_{30}	840 (449)	1140 (616)	435 (224)
T_{50}	980 (527)	1230 (666)	558 (292)
T_{60}	1190 (643)	---	---
T_{70}	---	1353 (734)	630 (332)
T_{90}	---	---	884 (473)

Table 8.3
BITUMEN ATMOSPHERIC RESIDUE HYDROCRACKING

STREAM FLOWS

CAPACITY: 55,000 BPSD (8,744 M^3/SD)
650°F+ (343°C+) ATMOSPHERIC RESIDUE
AT 0.90 STREAM FACTOR

		Stream Flows, lb/Hr					
		(1)	(2)	(3)	(4)	(5)	(6)
	Mol Wt	Fresh Feed	Make-up Catalyst	Recycle Oil	Slurry Feed	Injection Hydrogen	Hydrogen
Water	18.0						
Nitrogen	28.0					112	187
Hydrogen	2.0					8,091	13,485
Hydrogen sulfide	34.1			1	1		
Ammonia	17.0						
Methane	16.0						
Ethane	30.1						
Propane	44.1			1	1		
Butane	58.1			3	3		
Naphtha	106.5			48	48		
Kerosene	172.9			318	318		
Heavy Diesel Fuel	243.8			1,830	27,620		
VGO Product	358.8			47,247	346,133		
Resid Product	671.4			106,480	602,527		
Catalyst			18,130	370	18,500		
Fresh Feed	520.0	820,724					
Total, lb/hr		820,724	18,130	156,298	995,150	8,204	13,673
kg/hr		372,274	8,224	70,895	451,393	3,721	6,202
lb-mole/hr		1,578	---	256	1,834	4,018	6,696

Table 8.3 (Continued)
BITUMEN ATMOSPHERIC RESIDUE HYDROCRACKING

STREAM FLOWS

CAPACITY: 55,000 BPSD (8,744 M^3/SD)
650°F+ (343°C+) ATMOSPHERIC RESIDUE
AT 0.90 STREAM FACTOR

		Stream Flows, lb/Hr					
		(7)	(8)	(9)	(10)	(11)	(12)
	Mol Wt	Make-Up Hydrogen	Heater Feed	Slurry Reactor Feed	Recycle Quench Hydrogen	Slurry Reactor Effluent	Hot High Pressure Separator Vapor
Water	18.0				171	2,633	2,631
Nitrogen	28.0	418	113	187	1,236	1,423	1,387
Hydrogen	2.0	30,095	8,091	13,485	19,066	21,717	21,246
Hydrogen sulfide	34.1		1	1		26,757	25,456
Ammonia	17.0				88	88	84
Methane	16.0				5,957	8,530	8,244
Ethane	30.1				5,511	10,651	10,183
Propane	44.1		1	1	5,536	18,390	17,405
Butane	58.1		3	3	5,457	41,442	38,736
Naphtha	106.5		48	48	468	116,484	101,681
Kerosene	172.9		318	318	10	150,931	115,312
Heavy Diesel Fuel	243.8		27,620	27,620		173,738	104,174
VGO Product	358.8		346,135	346,135		315,899	81,038
Resid Product	671.4		602,552	602,552		145,167	589
Catalyst			18,500	18,500		18,500	
Fresh Feed	520.0						
Total, lb/hr		30,514	1,003,382	1,008,851	43,500	1,052,351	528,164
kg/hr		13,841	455,126	457,607	19,731	477,338	239,571
lb-mole/hr		15,257	5,852	8,530	10,357	17,523	15,673

Table 8.3 (Continued)
BITUMEN ATMOSPHERIC RESIDUE HYDROCRACKING

STREAM FLOWS

CAPACITY: 55,000 BPSD (8,744 M^3/SD)
650°F+ (343°C+) ATMOSPHERIC RESIDUE
AT 0.90 STREAM FACTOR

		Stream Flows, lb/Hr					
	Mol Wt	(13) Hot High Pressure Separator Liquid	(14) Vacuum Separator By-pass	(15) V-105 Hot Vacuum Separator Feed	(16) V-105 Hot Vacuum Separator Liquid	(17) V-106 Hot Vacuum Separator Liquid	(18) Toluene Insoluble Separator By-pass
Water	18.0	2		2			
Nitrogen	28.0	36	1	35			
Hydrogen	2.0	471	17	454			
Hydrogen sulfide	34.1	1,301	46	1,255	1	1	
Ammonia	17.0	4		4		0	
Methane	16.0	286	10	275		0	
Ethane	30.1	469	17	452		0	
Propane	44.1	985	35	950	1	1	
Butane	58.1	2,705	96	2,609	3	3	
Naphtha	106.5	14,803	526	14,277	48	48	1
Kerosene	172.9	35,619	1,267	34,352	318	318	6
Heavy Diesel Fuel	243.8	69,563	2,474	67,089	1,830	1,830	37
VGO Product	358.8	234,858	8,353	226,505	49,399	49,399	988
Resid Product	671.4	144,553	5,141	139,412	137,157	137,157	2,743
Catalyst		18,500		18,500	18,500	18,500	370
Fresh Feed	520.0						
Total, lb/hr		524,156	17,984	506,172	207,257	207,257	4,145
kg/hr		237,753	8,157	229,596	94,010	94,010	1,880
lb-mole/hr		1,817	65	1,753	305	305	6

Table 8.3 (Continued)
BITUMEN ATMOSPHERIC RESIDUE HYDROCRACKING

STREAM FLOWS

CAPACITY: 55,000 BPSD (8,744 M^3/SD)
650°F+ (343°C+) ATMOSPHERIC RESIDUE
AT 0.90 STREAM FACTOR

		Stream Flows, lb/Hr					
	Mol Wt	(19) Toluene Insoluble Separator Feed	(20) Recycle	(21) Residue Product	(22) V-105 Hot Vacuum Separator Vapor	(23) V-106 Hot Vacuum Separator Vapor	(24) Vacuum Cold Separator Feed
Water	18.0				2		2
Nitrogen	28.0				35		35
Hydrogen	2.0				454		454
Hydrogen sulfide	34.1	1	1		1,254		1,254
Ammonia	17.0				4		4
Methane	16.0				275		275
Ethane	30.1				452		452
Propane	44.1	1	1		949		949
Butane	58.1	3	3		2,606		2,606
Naphtha	106.5	47	47		14,229		14,229
Kerosene	172.9	311	311		34,034		34,034
Heavy Diesel Fuel	243.8	1,793	1,793		65,259		65,259
VGO Product	358.8	48,411	46,259	2,152	177,106		177,106
Resid Product	671.4	134,414	103,737	30,677	2,255		2,255
Catalyst		18,500		18,500			
Fresh Feed	520.0						
Total, lb/hr		203,481	152,152	51,329	298,915		298,915
kg/hr		92,298	69,015	23,282	135,586		135,586
lb-mole/hr		299	250	49	1,447		1,447

Table 8.3 (Continued)
BITUMEN ATMOSPHERIC RESIDUE HYDROCRACKING

STREAM FLOWS

CAPACITY: 55,000 BPSD (8,744 M^3/SD)
650°F+ (343°C+) ATMOSPHERIC RESIDUE
AT 0.90 STREAM FACTOR

		Stream Flows, lb/Hr					
	Mol Wt	(25) Vacuum Cold Separator Vapor	(26) Vacuum Cold Separator Liquid	(27) Hydrocarbon to Hydrotreating	(28) Make-up Hydrogen to Hydrotreating	(29) R-201 Make-up Hydrogen	(30) R-201 Hydrotreating Reactor Feed
Water	18.0	1	1	2,632			2,632
Nitrogen	28.0	35		1,388	231	171	1,560
Hydrogen	2.0	454		21,263	16,610	12,336	33,599
Hydrogen sulfide	34.1	1,188	65	25,567			25,567
Ammonia	17.0	4		84			84
Methane	16.0	273	2	8,256			8,256
Ethane	30.1	435	17	10,216			10,216
Propane	44.1	839	111	17,551			17,551
Butane	58.1	1,799	807	39,640			39,640
Naphtha	106.5	797	13,432	115,639			115,639
Kerosene	172.9	16	34,018	150,597			150,597
Heavy Diesel Fuel	243.8		65,259	171,908			171,908
VGO Product	358.8		177,106	266,498			266,498
Resid Product	671.4		2,255	7,985			7,985
Catalyst							
Fresh Feed	520.0						
Total, lb/hr		5,842	293,074	839,225	16,841	12,507	851,732
kg/hr		2,650	132,936	380,666	7,639	5,673	386,339
lb-mole/hr		352	1,095	16,852	8,248	6,125	22,977

Table 8.3 (Continued)
BITUMEN ATMOSPHERIC RESIDUE HYDROCRACKING

STREAM FLOWS

CAPACITY: 55,000 BPSD (8,744 M^3/SD)
650°F+ (343°C+) ATMOSPHERIC RESIDUE
AT 0.90 STREAM FACTOR

		Stream Flows, lb/Hr					
	Mol Wt	(31) R-201 Recycle Quench Hydrogen	(32) R-201 Effluent	(33) Hot High Pressure Separator Liquid	(34) Cold Low Pressure Separator Off Gas	(35) Cold Low Pressure Separator Liquid	(36) Hot High Pressure Separator Gas
Water	18.0	268	5,570	4	1	3	5,566
Nitrogen	28.0	1,932	3,491	31	30	2	3,460
Hydrogen	2.0	29,804	53,493	384	372	12	53,108
Hydrogen sulfide	34.1		37,438	825	584	242	36,612
Ammonia	17.0	137	4,005	90	59	30	3,916
Methane	16.0	9,312	17,711	233	207	25	17,479
Ethane	30.1	8,615	19,175	378	284	93	18,797
Propane	44.1	8,654	26,635	706	422	284	25,929
Butane	58.1	8,531	48,515	1,734	731	1,003	46,780
Naphtha	106.5	732	112,982	11,108	698	10,410	101,874
Kerosene	172.9	16	182,672	46,240	200	46,041	136,431
Heavy Diesel Fuel	243.8		198,509	104,105	28	104,077	94,404
VGO Product	358.8		194,413	177,428		177,428	16,985
Resid Product	671.4		15,123	15,017		15,017	106
Catalyst							
Fresh Feed	520.0						
Total, lb/hr		68,000	919,732	358,283	3,617	354,665	561,449
kg/hr		30,844	417,183	162,515	1,641	160,874	254,669
lb-mole/hr		16,094	34,961	1,576	259	1,317	33,385

Table 8.3 (Continued)
BITUMEN ATMOSPHERIC RESIDUE HYDROCRACKING

STREAM FLOWS

CAPACITY: 55,000 BPSD (8,744 M^3/SD)
650°F+ (343°C+) ATMOSPHERIC RESIDUE
AT 0.90 STREAM FACTOR

		Stream Flows, lb/Hr					
	Mol Wt	(37) R-202 Make-up Hydrogen	(38) R-202 Feed	(39) R-202 Quench Recycle Hydrogen	(40) R-202 Effluent	(41) Cold High Pressure Separator Feed	(42) Cold High Pressure Separator Vapor
Water	18.0		5,566	55	5,762	306,912	536
Nitrogen	28.0	59	3,519	398	3,917	3,917	3,873
Hydrogen	2.0	4,274	57,383	6,136	60,085	60,085	59,757
Hydrogen sulfide	34.1		36,612		36,612	36,612	28,657
Ammonia	17.0		3,916	28	4,014	4,014	2,757
Methane	16.0		17,479	1,917	19,421	19,421	18,670
Ethane	30.1		18,797	1,774	20,622	20,622	17,273
Propane	44.1		25,929	1,782	27,839	27,839	17,352
Butane	58.1		46,780	1,756	48,893	48,894	17,105
Naphtha	106.5		101,874	151	71,092	71,092	1,468
Kerosene	172.9		136,431	3	155,738	155,738	31
Heavy Diesel Fuel	243.8		94,404		125,787	125,787	
VGO Product	358.8		16,985				
Resid Product	671.4		106				
Catalyst							
Fresh Feed	520.0						
Total, lb/hr		4,334	565,783	14,000	579,783	880,932	167,480
kg/hr		1,966	256,635	6,350	262,985	399,584	75967.54
lb-mole/hr		2,122	35,507	3,314	37,029	53,745	33,256

Table 8.3 (Continued)
BITUMEN ATMOSPHERIC RESIDUE HYDROCRACKING

STREAM FLOWS

CAPACITY: 55,000 BPSD (8,744 M^3/SD)
650°F+ (343°C+) ATMOSPHERIC RESIDUE
AT 0.90 STREAM FACTOR

		Stream Flows, lb/Hr					
		(43)	(44)	(45)	(46)	(47)	(48)
	Mol Wt	Purge Gas	H_2S	Recycle Hydrogen	Cold High Pressure Separator Liquid	Fractionator Overhead	Fractionator Reflux
Water	18.0	43		494	70	106	37
Nitrogen	28.0	308		3,565	44	48	4
Hydrogen	2.0	4,752		55,005	328	526	198
Hydrogen sulfide	34.1		28,657		7,956	19,296	11,341
Ammonia	17.0	22		254	1,257	6,127	4,870
Methane	16.0	1,485		17,185	752	1,089	337
Ethane	30.1	1,374		15,899	3,349	6,868	3,519
Propane	44.1	1,380		15,972	10,487	33,639	23,169
Butane	58.1	1,360		15,745	31,788	151,349	126,895
Naphtha	106.5	117		1,351	69,624		
Kerosene	172.9	2		29	155,706		
Heavy Diesel Fuel	243.8				125,787		
VGO Product	358.8						
Resid Product	671.4						
Catalyst							
Fresh Feed	520.0						
Total, lb/hr		10,842	28,657	125,500	407,147	219,048	170,371
kg/hr		4,918	12,999	56,926	184,679	99,358	77,279
lb-mole/hr		2,566	841	29,704	3,486	5,810	3,233

Table 8.3 (Continued)
BITUMEN ATMOSPHERIC RESIDUE HYDROCRACKING

STREAM FLOWS

CAPACITY: 55,000 BPSD (8,744 M^3/SD)
650°F+ (343°C+) ATMOSPHERIC RESIDUE
AT 0.90 STREAM FACTOR

		Stream Flows, lb/Hr					
	Mol Wt	(49) Low Pressure Amine Feed	(50) Low Pressure Amine H_2S	(51) Light Fraction Product	(52) Fractionator Bottoms	(53) Fractionator Reboil	(54) Heavy Fraction Product
Water	18.0	70		70			
Nitrogen	28.0	44		44			
Hydrogen	2.0	328		328			
Hydrogen sulfide	34.1	7,955	7,955		2	1	1
Ammonia	17.0	1,257		1,257	1		
Methane	16.0	752		752			
Ethane	30.1	3,349		3,349			
Propane	44.1	10,469		10,469	34	17	17
Butane	58.1	24,454		24,454	14,424	7,090	7,334
Naphtha	106.5				136,930	67,306	69,624
Kerosene	172.9				306,229	150,522	155,706
Heavy Diesel Fuel	243.8				247,385	121,599	125,787
VGO Product	358.8						
Resid Product	671.4						
Catalyst							
Fresh Feed	520.0						
Total, lb/hr		48,677	7,955	40,722	705,006	346,536	358,470
kg/hr		22,080	3,608	18,471	319,785	157,186	162,599
lb-mole/hr		1,292	233	1,058	4,316	2,122	2,195

Table 8.3 (Concluded)
BITUMEN ATMOSPHERIC RESIDUE HYDROCRACKING

STREAM FLOWS

CAPACITY: 55,000 BPSD (8,744 M^3/SD)
650°F+ (343°C+) ATMOSPHERIC RESIDUE
AT 0.90 STREAM FACTOR

		Stream Flows, lb/Hr
		(55)
	Mol Wt	Synthetic Crude Oil
Water	18.0	3
Nitrogen	28.0	2
Hydrogen	2.0	12
Hydrogen sulfide	34.1	242
Ammonia	17.0	31
Methane	16.0	25
Ethane	30.1	93
Propane	44.1	301
Butane	58.1	8,337
Naphtha	106.5	80,034
Kerosene	172.9	201,747
Heavy Diesel Fuel	243.8	229,863
VGO Product	358.8	177,428
Resid Product	671.4	15,017
Catalyst		
Fresh Feed	520.0	
Total, lb/hr		713,135
kg/hr		323,473
lb-mole/hr		3,511

Table 8.4
BITUMEN ATMOSPHERIC RESIDUE HYDOCRACKING

MAJOR EQUIPMENT

CAPACITY: 5,622 MILLION LB/YR (2,549,100 T/YR)
SYNTHETIC CRUDE OIL
AT 0.90 STREAM FACTOR

EQUIPMENT NUMBER	NAME	SIZE		MATERIAL OF CONSTRUCTION	REMARKS
REACTORS					
R-101	SLURRY HYDROCRACKING REACTOR	117,000	GAL	SHELL: 2.25CR-1MO	
R-201	HYDROTREATING REACTOR	106,250	GAL	SHELL: 2.25CR-1MO	TWO EQUAL CATALYST BEDS
R-202A,B	HYDROTREATING REACTOR	106,250	GAL	SHELL: 2.25CR-1MO	TWO EQUAL CATALYST BEDS/REACTOR
COLUMNS					
C-201	FRACTIONATOR	10	FT DIA	SHELL: C.S.	24 VALVE TRAYS, 24 INCH SPACING
		48	FT	TRAYS: C.S.	
COMPRESSORS					
K-101	MAKE-UP H2 COMPRESSOR	9,220	BHP	C.S.	STAGE 1
K-102	MAKE-UP H2 COMPRESSOR	9,232	BHP	C.S.	STAGE 2
K-201	RECYCLE H2 COMPRESSOR	1,516	BHP	C.S.	
HEAT EXCHANGERS					
E-101	H2 MAKE-UP AIR COOLER	4,000	SQ FT	SHELL: C.S.	
		21.37	MMBTU/HR	TUBES: C.S.	
E-102A-C	HOT VAC SEP GAS-RECYCLE H2	8,835	SQ FT	SHELL: 2.25CR-1MO	
		38.52	MMBTU/HR	TUBES: 2.25CR-1MO	
E-103	HOT VAC SEP OVERHEAD-COOLER	9,010	SQ FT	SHELL: C.S.	
		29.82	MMBTU/HR	TUBES: C.S.	
E-104	EJECTOR COOLER	500	SQ FT	SHELL: C.S.	
		4.81	MMBTU/HR	TUBES: C.S.	
E-201	V-201 LIQUID-MAKE-UP H2 EXCHANGER	4,500	SQ FT	SHELL: 2.25CR-1MO	
		16.84	MMBTU/HR	TUBES: 2.25CR-1MO	
E-202	V-201 LIQUID STEAM BOILER	10,000	SQ FT	SHELL: C.S.	
		66.48	MMBTU/HR	TUBES: C.S.	
E-203A,B	FRACTIONATOR REBOILER	10,000	SQ FT	SHELL: C.S.	
		57.7	MMBTU/HR	TUBES: 2.25CR-1MO	
E-204A,B	R-202 EFFLUENT STEAM	8,650	SQ FT	SHELL: C.S.	
		67.8	MMBTU/HR	TUBES: C.S.	
E-205A,B	R-202 EFFLUENT COOLER	9,400	SQ FT	SHELL: C.S.	
		35.8	MMBTU/HR	TUBES: C.S.	
E-206A,B	FRACTIONATOR CONDENSER	7,100	SQ FT	SHELL: C.S.	
		14.5	MMBTU/HR	TUBES: C.S.	
PROCESS FURNACES					
F-101	FEED HEATER	355.4	MMBTU/HR	316 SS	
TANKS (NOT SHOWN)					
T-101	ATMOSPHERIC RESIDUE	2,310,000	GAL	C.S.	1 DAY SUPPLY
T-102	RESIDUE TANK	114,000	GAL	C.S.	1 DAY PRODUCTION
T-201	SYNTHETIC CRUDE OIL	2,161,000	GAL	C.S.	1 DAY PRODUCTION
PRESSURE VESSELS					
V-101	CATALYST FF MIXER	10,310	GAL	304 SS CLAD	
V-102	MAKE-UP H2 KNOCK OUT DRUM	2,950	GAL	C.S.	

Table 8.4 (Concluded)
BITUMEN ATMOSPHERIC RESIDUE HYDOCRACKING

MAJOR EQUIPMENT

CAPACITY: 5,622 MILLION LB/YR (2,549,100 T/YR)
SYNTHETIC CRUDE OIL
AT 0.90 STREAM FACTOR

EQUIPMENT NUMBER	NAME	SIZE	MATERIAL OF CONSTRUCTION	REMARKS
PRESSURE VESSELS (CONCLUDED)				
V-103	MAKE-UP H2 KNOCK OUT DRUM	1,550 GAL	C.S.	
V-104	HOT HIGH PRESSURE SEPARATOR	21,800 GAL	2.25CR-1MO	
V-105	HOT VACUUM SEPARATOR 1	17,200 GAL	2.25CR-1MO	
V-106	HOT VACUUM SEPARATOR 2	9,000 GAL	2.25CR-1MO	
V-107	COLD VACUUM SEPARATOR	8,200 GAL	C.S.	
V-108	TOLUENE INSOLUBLES REMOVAL	5,500 GAL	2.25CR-1MO	
V-109	SEAL DRUM	650 GAL	C.S.	
V-122A-D	CATALYST STORAGE	116,336 GAL	C.S.	
V-201	HOT HIGH PRESSURE SEPARATOR	13,500 GAL	2.25CR-1MO	
V-202	COLD LOW PRESSURE SEPARATOR	9,000 GAL	C.S.	
V-203	COLD HIGH PRESSURE SEPARATOR	31,500 GAL	C.S.	
V-204	FRACTIONATOR RECEIVER	8,000 GAL	C.S.	
MISCELLANEOUS EQUIPMENT				
M-101	EJECTOR		CARBON STEEL	
PACKAGE UNITS				
G-101	CATALYST HANDLING UNIT	18,500 LB/H	CARBON STEEL	NOT SHOWN
G-201	HIGH PRESSURE AMINE UNIT		CARBON STEEL	
G-202	LOW PRESSURE AMINE UNIT		CARBON STEEL	
G-203	INITIAL CATALYST FILL	14,600 FT3	HDT CATALYST	R-201
G-204	INITIAL CATALYST FILL	25.732 FT3	HDT CATALYST	R-202

PUMPS

SECTION	OPERATING	SPARES	OPERATING BHP
100	19	5	2,661
200	4	2	247

Table 8.5
BITUMEN ATMOSPHERIC RESIDUE HYDOCRACKING

UTILITIES SUMMARY

CAPACITY: 5,622 MILLION LB/YR (2,549,100 T/YR)
SYNTHETIC CRUDE OIL
AT 0.90 STREAM FACTOR

	UNITS	BATTERY LIMITS TOTAL	SECTION 100	SECTION 200
AVERAGE CONSUMPTIONS				
COOLING WATER	GPM	2,184	16	2,168
ELECTRICITY	KW	17,423	16,112	1,311
NATURAL GAS	MM BTU/HR	365	365	--
STEAM, 50 PSIG	M LB/HR	23	--	23
STEAM, 150 PSIG	M LB/HR	-121	--	-121
STEAM, 600 PSIG	M LB/HR	-60	--	-60
PEAK DEMANDS				
COOLING WATER	GPM	2,621	19	2,602
ELECTRICITY	KW	19,203	17,746	1,458
NATURAL GAS	MM BTU/HR	484	484	--
STEAM, 50 PSIG	M LB/HR	27	--	27

Vapor from V-201 is combined with make-up hydrogen prior to flowing into the second stage hydrotreating reactor, R-202. Reactor effluent provides heat for reboiler E-203 and then steam boiler E-204. Effluent is finally cooled to 100°F (38°C) by cooler E-205. Hydrogen rich gas is separated from the effluent in the cold, high pressure separator V-203. The gas is amine treated to remove H_2S. A purge stream removes non-condensables. The purified hydrogen is compressed by recycle hydrogen compressor K-201 and heated by heat exchange with hot vacuum separator vapor in E-102 in Section 100.

The liquid from V-203 is flashed and then fractionated in C-201. Overhead vapors are partially condensed in E-206 with all the liquid separated in receiver V-204 returned as reflux to the fractionator. Vapor is LPG rich gas that is treated in low pressure amine treater G-202 to remove H_2S to produce the Light Fraction. Fractionator bottoms are the Middle Fraction product. The Middle Fraction and Heavy Fraction from V-202 are combined to form the SCO product.

PROCESS DISCUSSION

The on stream factor of 0.90 is used due to the relatively few plants built to process bitumen and the well known problems of handling heavy oils handling. The process has been demonstrated in a 3 B/D demonstration unit operated for over 1,500 hours. No commercial units have yet been built.

The design is not fully optimized, especially for energy utilization. Our goal is to derive a reasonable process for cost estimating within our ±25% accuracy. The model should be considered as a preliminary design that should serve as a good starting point for performing more detailed process design. Hydrocracker units are customized to meet feedstock flexibility, catalyst conditions and owner preferences. Process licensors and contractors have decades of general experience to draw upon in designing specific plants.

The basic design of the bitumen hydrocracker with integrated hydrotreater is generally based on information Kobe Steel Ltd. reported [211B175, 211B217].

Feedstock

The feedstock is characterized in Table 8.2 and is based on properties reported in augmented by our material balances of that data with distillation curves from another literature source [211B175] and by our best estimates using characterization of Cold Lake Blend heavy crude oil's fractions as a guide.

Hydrocracking Sections (100 and 300)

The reactor of the hydrocracker is a slurry reactor.

The hydrocracker catalyst is limonite of bulk density of **50** lb/ft^3. Catalyst is continually added to maintain activity and selectivity and an equal volume of the coked, metals containing spent catalyst is removed.

Hydrotreating Section (200)

The conditions given are generally for the start-of-run. At end-of-run conditions, the reactor inlet temperatures will have been raised to the maximum. The reactor pressure drops are often larger than at the start of run.

Hydrogen System

Make-up hydrogen supplied is assumed to be vendor provided 99.9 mol% pure hydrogen at 112°F (44°C) and 300 psia. The hydrogen is assumed to be made by steam methane reforming with pressure swing adsorption purification. Make-up hydrogen replaces hydrogen consumed by reaction to form H_2S and ammonia and to saturate aromatics as well as losses through venting to the fuel gas system and small leaks.

The compressors are generally sized for start-of-run (SOR) conditions. At the end-of-run (EOR), the pressure drop across the hydrotreater reactor could well be higher, resulting in lower pressure in the stripper column and the gas recovery train to the amine unit. Alternatively, the hydrotreater may be designed to initially operate at lower pressure.

Materials of Construction

The presence of H_2S and H_2 requires chrome-molybdenum or stainless steel clad vessels and exchanger shells and stainless steel exchanger tubes. The reactors and down stream vessels and exchanger shells that operate above 500°F (260°C) are either 2¼ Cr 1 Mo or 1¼ Cr ½ Mo. Stainless steel is used for the furnace tubes. The piping around the reactors is also Cr-Mo steel. Unless noted in the equipment list (Table 8.4), all other equipment is carbon steel.

Waste Treatment and Disposal

Wastes from the plant include sour water, sour gas and spent catalyst. H_2S is recovered by amine scrubbing. The H_2S rich streams from the amine units are sent to the refinery's sulfur recovery unit, typically a Claus-type process with tail gas treater, for recovery as elemental sulfur. Sulfur recovery is reviewed in PEP Report 216 "Acid Gas Treatment and Sulfur Recovery" (1997). The sour water is treated and the ammonia recovered. Oily condensate is sent to the refinery's gravity settler (API settler). Oil is recovered and the water is further purified in the refinery's wastewater treatment system.

The U.S. Environmental Protection Agency now lists hydrotreating catalysts (and likely spent hydrocracker catalysts) as Hazardous Wastes (K171 and K172). Some European agencies are reviewing the disposal of spent hydrotreating catalyst [211B301]. Landfilling is increasingly becoming unattractive. Spent hydrotreater catalyst is usually sent to a metals reclaimer for processing to recover the valuable metals, as discussed in PEP Report 214 "Heavy Oil Hydrotreating" (2007), which is the option we assume.

COST ESTIMATES

We present here the capital investment and production cost estimates for hydrocracking atmospheric residue to produce synthetic crude oil. Allowance for interest on funds spent during construction is not included (i.e. overnight construction). The location is the U.S. Gulf Coast. Construction begins in mid 2007.

Equipment costs and production costs are estimated primarily using the PEP COST database, version 3.1.5, developed by PEP [PEP Report 162].

Capital Costs

Capital costs at a PEP Cost Index of 768 (mid 2007) are developed for hydrocracking 55,000 BPSD of an atmospheric residue feedstock derived from bitumen.

Table 8.6 shows the Total Fixed Capital (TFC) investment is $380.5 million. The Battery Limits Investment (BLI), which includes PEP's contingency of 25% since this process is not commercialized, is $279.3 million. The Battery Limits Installed cost is $223.4 million. This installed cost includes $14.2 million for the initial reactor fill of the hydrotreating catalyst. The investment cost of the amine unit only includes the absorption and amine regeneration section [PEP Report 216]. The sulfur recovery sections are excluded since the refinery's existing Claus unit is assumed to be used.

The TFC of $380.5 million is 20% lower than a published estimate of $473 million (US$409 million before adjustment) for a hydrocracker with an integrated hydrotreater of the same capacities and feedstocks adjusted from mid-2004 to mid-2007 using the PEPCOST Indices. We may well be underestimating some equipment costs (Our goal is less than a 25% error). However, the published estimate is for a Northern Alberta, Canada site, an area that has experienced labor cost escalations and higher delivery charges than the U.S. Gulf Coast location of our estimate. Thus the labor rate and transportation costs of the published estimate could be higher than for the U.S. Gulf Coast. Also, our charges for offsites could be lower than those of the published estimate. Our feedstock and product storage capacity is minimal, especially for the Canadian site [211B217].

The off-sites utility and tankage investment is $9.3 million. Allotments for general services and waste treatment bring the total offsites investment to $101.3 million including a 25% contingency. The costs of each section are shown in Table 8.7.

As discussed in Section 4, the price of catalysts can vary widely with the cost of the metals. The cost of the second batch of catalyst is included as an operating materials expense. For our estimate, the hydrocracking catalyst is priced at 9.10 $/lb and the hydrotreating catalyst at 7.65 $/lb determined from the cost of metals plus a base charge of $4.25/lb.

The BLI costs in Table 8.6 includes factors for indirect costs and unscheduled equipment. Indirect costs include such items as equipment rental (scaffolding and lifting for example), testing, freight, and sales taxes and insurance. The indirect cost also includes labor overhead expenses, engineering and contractor's profit. Indirect costs are discussed in Appendix B. We apply the unscheduled equipment allowance factor of 10% to the sum of equipment cost, direct installation costs, package unit costs and indirect costs. Licensing or royalty fees are regarded as proprietary and are not included in these costs.

Table 8.6
BITUMEN ATMOSPHERIC RESIDUE SLURRY HYDROCRACKING

TOTAL CAPITAL INVESTMENT

CAPACITY: 5,622 MILLION LB/YR (2,549,1000 T/YR)
SYNTHETIC CRUDE OIL
AT 0.90 STREAM FACTOR

PEP COST INDEX: 768

	COST ($1,000)	CAPACITY EXPONENT UP	CAPACITY EXPONENT DOWN
BATTERY LIMITS EQUIPMENT, F.O.B.			
REACTORS	36,704	0.93	0.95
COLUMNS	197	0.69	0.70
VESSELS & TANKS	4,320	1.00	0.80
HEAT EXCHANGERS	4,247	0.91	0.78
FURNACES	7,518	1.04	0.82
COMPRESSORS	14,623	1.06	0.76
MISCELLANEOUS EQUIPMENT	6	0.60	0.60
PUMPS	1,222	0.76	0.67
TOTAL	68,836	0.97	0.87
DIRECT INSTALLATION COSTS	50,846	0.92	0.82
PACKAGE UNIT	13,282	0.71	0.57
INITIAL CATALYST FILL	14,187	1.00	1.00
INDIRECT COSTS	55,969	0.88	0.80
UNSCHEDULED EQUIPMENT, 10%	20,312	0.92	0.82
BATTERY LIMITS, INSTALLED	223,432	0.92	0.82
CONTINGENCY, 25%	55,858	0.92	0.82
BATTERY LIMITS INVESTMENT	279,290	0.92	0.82
OFF-SITES, INSTALLED			
CLARIFIED WATER	516	0.74	0.18
COOLING WATER	564	0.92	0.92
PROCESS WATER	235	0.00	0.00
BOILER FEED WATER	4,016	0.58	0.58
TANKAGE	3,989	0.65	0.65
UTILITIES & STORAGE	9,320	0.63	0.58
GENERAL SERVICE FACILITIES	57,722	0.91	0.81
WASTE TREATMENT	13,964	0.92	0.82
TOTAL	81,006	0.88	0.79
CONTINGENCY, 25%	20,252	0.88	0.79
OFF-SITES INVESTMENT	101,258	0.88	0.79
TOTAL FIXED CAPITAL	380,548	0.91	0.81

Table 8.7
BITUMEN ATMOSPHERIC RESIDUE SLURRY HYDROCRACKING

CAPITAL INVESTMENT BY SECTION

CAPACITY: 5,622 MILLION LB/YR (2,549,1000 T/YR)
SYNTHETIC CRUDE OIL
AT 0.90 STREAM FACTOR

PEP COST INDEX: 768

	HYDROCRACKING			HYDROTREATING		
	COST ($1,000)	CAPACITY EXPONENT UP	CAPACITY EXPONENT DOWN	COST ($1,000)	CAPACITY EXPONENT UP	CAPACITY EXPONENT DOWN
BATTERY LIMITS EQUIPMENT, F.O.B.						
REACTORS	8,407	0.91	0.93	28,297	0.93	0.96
COLUMNS	--	--	--	197	0.69	0.70
VESSELS & TANKS	2,676	0.80	0.79	1,643	1.29	0.82
HEAT EXCHANGERS	1,605	0.88	0.63	2,642	0.94	0.88
FURNACES	7,518	1.04	0.82	--	--	--
COMPRESSORS	13,315	1.08	0.76	1,308	0.76	0.76
MISCELLANEOUS EQUIPMENT	6	0.60	0.60	--	--	--
PUMPS	1,110	0.76	0.68	112	0.70	0.61
TOTAL	34,637	0.99	0.81	34,199	0.94	0.93
DIRECT INSTALLATION COSTS	41,027	0.93	0.82	9,819	0.89	0.81
PACKAGE UNIT	2,250	1.00	1.00	11,032	0.65	0.50
INITIAL CATALYST FILL	--	--	--	14,187	1.00	1.00
INDIRECT COSTS	29,635	0.90	0.78	26,335	0.85	0.81
UNSCHEDULED EQUIPMENT, 10%	10,755	0.95	0.81	9,557	0.89	0.84
BATTERY LIMITS INSTALLED	118,303	0.95	0.81	105,129	0.89	0.84
CONTINGENCY, 25%	29,576	0.95	0.81	26,282	0.89	0.84
BATTERY LIMITS INVESTMENT	147,879	0.95	0.81	131,412	0.89	0.84
OFFSITES, INSTALLED						
CLARIFIED WATER	1	0.74	0.18	515	0.74	0.18
COOLING WATER	4	0.92	0.92	559	0.92	0.92
PROCESS WATER	2	0.00	0.00	233	0.00	0.00
BOILER FEED WATER	--	--	--	4,016	0.58	0.58
TANKAGE	2,128	0.65	0.65	1,861	0.65	0.65
UTILITIES & STORAGE	2,135	0.65	0.65	7,185	0.62	0.57

Off-site utilities and tankage installed investments totaled about $9.3 million. Of this total, tankage for one day of feedstock supply and one day's production cost $4.0 million. Some tankage is required for handling upsets and for good product quality control.

An allowance of $57.7 million is made for investment in general services facilities, which includes items such as roads, parking, fences, administrative offices, craft shops, fire and safety equipment, plant communications and warehouses. A $13.9 million allowance is made for investments expanding or providing waste treatment facilities. The off-sites investment totals $101.3 million with the inclusion of the general services facilities, waste treatment investments and 25% contingency.

The BLI in Tables 8.6 and 8.7 includes PEP's contingency of 25% for new or novel refinery processes. The process licensor and some engineering contractors have general experience building heavy oil hydrocrackers. With a 15% contingency usually applied to established processes, the BLI becomes $257 million and the TFC declines to $343.7 million with an off-sites investment of $86.7 million.

Production Costs

Table 8.8 shows our production cost estimate for a 55,000 BPSD bitumen atmospheric residue hydrocracking unit with integrated hydrotreater along with estimates for plants of one half and 1.5 times the base case capacity. The reactors of both the hydrocracking section (100) and the hydrotreating section (200) approach the maximum size. The BLI, offsites and TFC for the larger capacity plant is calculated assuming the equipment can be scaled up as one vessel. The feedstock, product and utility values are based on mid-year 2007 prices for the U.S. Gulf Coast.

The AR feedstock value was determined to be 15.324 ¢/lb (1.307 $/gal or 54.880 $/B) based on the values of vacuum residue (12.341 ¢/lb) and vacuum gas oil (20.403 ¢/lb). The product SCO was valued as Syncrude Sweet Blend at 24.71 ¢/lb (1.776 $/gal or 74.599 $/B). The cost of a replacement batch of hydrotreating catalyst is included in the raw materials assuming a two year catalyst life. In Table 8.8, all variable costs are expressed as ¢/lb of the SCO product. Gross raw materials cost 17.79 ¢/lb. By-products and utilities (steam) generated are shown as credits (negative). The by-product credit is -1.33 ¢/lb due to the residue oil, LP gas and off gases. No value was given to the H_2S streams. Net total utilities cost 0.28 ¢/lb. Variable costs total 16.74 ¢/lb.

Labor costs are based upon 8 operators per shift (one control room, seven outside) at the total compensation rate, including benefits, of $42.54/H. Maintenance labor is estimated as 3%/yr of battery limits investment. Since many of the analyses are derived from the online control instrumentation, control laboratory labor is estimated at 20% of direct operating labor costs. Labor costs total 0.21 ¢/lb.

Table 8.8
BITUMEN ATMOSPHERIC RESIDUE SLURY HYDROCRACKING

PRODUCTION COSTS

PEP COST INDEX: 768

VARIABLE COSTS

	UNIT COST	CONSUMPTION PER LB	¢/LB
RAW MATERIALS			
ATMOSPHERIC RESID FEED	15.32 ¢/LB	1.15087 LB	17.63
H2 (99 VOL%)	0.0031 ¢/LB	0.042788 LB	NEGL
LIMONITE CATALYST	1.25 ¢/LB	0.025942 LB	0.03
HYDROTREATING CATALYST	765 ¢/LB	0.000175 LB	0.13
GROSS RAW MATERIALS			17.79
BY-PRODUCTS			
OFF GAS (25)	653 ¢/MMBTU	-0.000159 MMBTU	-0.10
OFF GAS (34)	653 ¢/MMBTU	-0.000104 MMBTU	-0.07
LP GAS (50)	653 ¢/MMBTU	-0.001087 MMBTU	-0.71
RESIDUE OIL	9.87 ¢/LB	-0.046035 LB	-0.45
TOTAL BY-PRODUCTS			-1.33

	UNIT COST	CONSUMPTION PER LB	CONSUMPTION PER KG	
UTILITIES				
COOLING WATER	10.87 ¢/MGAL	0.184 GAL	1.53 LITERS	NEGL
STEAM, 150 PSIG	8.32 $/MLB	-0.137 LB	-0.137 KG	-0.11
STEAM, 600 PSIG	11.3 $/MLB	-0.0834 LB	-0.0834 KG	-0.09
ELECTRICITY	6.1 ¢/KWH	0.0244 KWH	0.0539 KWH	0.15
NATURAL GAS	6.53 $/MMBTU	512 BTU	284 KCAL	0.33
TOTAL UTILITIES				0.28

Table 8.8 (Concluded)
BITUMEN ATMOSPHERIC RESIDUE SLURY HYDROCRACKING

PRODUCTION COSTS

PEP COST INDEX: 768

CAPACITY (MILLION LB/YR)*	**2,811**	**5,622#**	**8,434**
INVESTMENT ($ MILLIONS)			
BATTERY LIMITS (BLI)	157.8	279.3	407.8
OFFSITES	58.6	101.3	144.7
TOTAL FIXED CAPITAL (TFC)	216.5	380.5	552.5
SCALING EXPONENTS		0.81	0.91
PRODUCTION COSTS (¢/LB)			
RAW MATERIALS	17.79	17.79	17.79
BY-PRODUCTS	-1.33	-1.33	-1.33
UTILITIES	0.28	0.28	0.28
VARIABLE COSTS	16.74	16.74	16.74
OPERATING LABOR, 8/SHIFT, $42.54/HR	0.11	0.05	0.04
MAINTENANCE LABOR, 3%/YR OF BLI	0.17	0.15	0.14
CONTROL LAB LABOR, 20% OF OPER LABOR	0.02	0.01	0.01
LABOR COSTS	0.30	0.21	0.19
MAINTENANCE MATERIALS, 3%/YR OF BLI	0.17	0.15	0.14
OPERATING SUPPLIES, 10% OF OPER LABOR	0.01	0.01	NEGL
TOTAL DIRECT COSTS	17.22	17.11	17.07
PLANT OVERHEAD, 80% OF LABOR COSTS	0.24	0.17	0.15
TAXES AND INSURANCE, 2%/YR OF TFC	0.15	0.14	0.13
PLANT CASH COSTS	17.61	17.42	17.35
DEPRECIATION, 10%/YR OF TFC	0.77	0.68	0.65
PLANT GATE COSTS	18.38	18.10	18.00
G&A, SALES, RESEARCH	0.26	0.25	0.24
NET PRODUCTION COST	18.64	18.35	18.24
ROI BEFORE TAXES, 94%/YR OF TFC	7.24	6.36	6.13
PRODUCT VALUE	25.88	24.71	24.37

---
* OF SYNTHETIC CRUDE OIL
# BASE CASE

Maintenance materials are estimated at 3%/yr of the battery limits investment; operating supplies at 10% of operating labor costs. Adding maintenance materials and supplies to the variable materials and labor costs produces a total direct operating cost of 17.11 ¢/lb or 51.654 $/B of SCO.

Our production cost estimates includes charges for plant overhead (80% of labor costs), property taxes and insurance (2%/yr of total fixed cost) and depreciation (10%/yr, straight line). Adding the overhead and taxes and insurance costs to the total direct operating cost gives a plant cash cost of 17.42 ¢/lb. Depreciation further adds 0.68 ¢/lb to bring the plant gate cost to 18.10 ¢/lb or 54.643 $/B.

General and administrative expenses (G&A), sales, and research and development (R&D) expenses add 0.25 ¢/lb since the product is usually used within the refinery. With G&S, sales and R&S expenses, the net production cost is 18.35¢/lb or 55.398 $/B.

With a before tax return on investment (ROI) of 94.0%, total product value of the SCO is 24.71 ¢/lb or 74.599 $/B, the market price. With a before tax return on investment (ROI) of 25%, a frequently used project screening value, the total product value of the SCO is 19.99 ¢/lb or 60.349 $/B.

Economy of scale benefits the product value as illustrated comparing the case of a unit of one-half of the capacity to the base case unit. The half size plant in Table 8.8 for a 42.7% ROI requires a SCO product value of 25.88 ¢/lb, which is 1.17 ¢/lb higher than the base case plant. The 1.5 times larger capacity plant in Table 8.8 assumes two slurry hydrocracking reactors of 75% of the base case reactor are in parallel. The first stage hydrotreating reactor is supplemented by a second reactor of one half the capacity while a third second stage reactor is added. The large plant requires only 24.37 ¢/lb or 0.34 ¢/lb less than the base case to achieve the same ROI.

Profitability

The value of synthetic crude oil not containing residue was 24.71 ¢/lb (1.776 $/gal or 74.599 $/B). With this product value, the before tax return on investment (ROI) is 94.0% for the base capacity plant, considerably greater than the 25% frequently used to screen projects. The TFC used in this calculation is based on a 25% contingency factor since the process is new. Using a 15% contingency factor commonly used for established processes, the lower TFC increases the ROI to 106%.

The effect of the value of the hydrocracking catalyst on profitability is not very great:

	Hydrocracking Catalyst, ¢/lb	% ROI
Base Case	1.25	94.0
	5.00	92.5
	15.00	88.7
	50.00	75.2

Holding the feedstock and other product values constant, the effect of the SCO product market value on profitability is shown in Table 8.9. A spread of 4.67 ¢/lb is required for a 25% ROI.

Table 8.9
EFFECT OF SCO MARKET VALUE ON PRETAX ROI

SCO Market Value, ¢/lb	Spread (SCO-VR[a]), ¢/lb	% ROI
24.71 (Base Case)	9.39	94.0
23.475	8.16	76.0
22.24	6.92	57.9
20.33	5.01	30.0
19.99	4.67	25.0
19.65	4.33	20.0
18.97	3.65	10.0
18.63	3.31	5.0
18.29	2.97	0

[a] 15.32 ¢/lb vacuum residue value.

Appendix A

PATENT SUMMARY TABLES

Table A.1
RESID HYDROCRACKING APPARATUS

PATENT SUMMARY

Reference Number	Assignee	Earliest Date Shown
US 2003 0147791		12/18/2002

A multi-stage loop reactor, based on the traditional bubble reactor, contains one or more draft tubes and a gas distributor at the bottom of the vessel. The tubes are axially parallel and each has its own gas distributor. Overall gas hold-up is high and the local gas hold-up is uniformly distributed throughout the reactor, which improves the overall gas-liquid mass transfer rate. Slurried catalyst particles are also distributed uniformly throughout the reactor without local accumulation or sedimentation.

US 2005 0077635	Shell Oil Company	8/18/2004

A tray having separate passages for gas and liquid effectively distributes liquid over an underlying catalyst bed in either co-current or counter-current operation. The liquid falls freely through a hole in a collecting tray onto a splash plate attached to a pipe attached to the bottom of the tray. The free fall distance is at least 100 mm between the hole and splash plate. Gas flows through a hole in the tray through a chimney pipe to impact a deflection plate that causes horizontal gas flow.

US 2005 0129587	(Hydrocarbon Technologies)	8/22/2002

A reactor cup shell-in-shell riser contains an integrated cyclonic helical separator for separating liquid and vapor that is fed by a central vertical pipe through slots discharging into two spiraling chambers at the top. A concentric outer pipe around the upper portion of the inlet pipe forms an annular space for liquid to exit into a liquid recycle collecting funnel. The vapor flows overhead within an annular space and exits the cyclone top through a pipe.

US 2005 0129595	(Hydrocarbon Technologies)	8/22/2002

A liquid recycle inlet stream distributor for introducing and mixing recycle oil with the fresh feedstock has a series of three circular plate caps (the lower two having a hole in their center) above the vertical inlet pipe nozzle in the bottom of the reactor vessel to direct the flow horizontally. Curved, radially parallel vanes between the plates impart a vortex motion in the liquid in the vessel bottom head below a grid plate. The vortex motion re-suspends fine catalyst particles that have settled in the head and promotes mixing of the recycle and fresh feeds.

Table A.1 (Continued)
RESID HYDROCRACKING APPARATUS

PATENT SUMMARY

Reference Number	Assignee	Earliest Date Shown
US 2005 0169822	(Hydrocarbon Technologies)	8/22/2002

An inlet sparger for distributing feedstock across the reactor cross-section has a plurality of downward directed, elongated slit openings arranged in three rows. The slits on the bottom row are oriented lengthwise along the bottom center of the inlet pipe. The second and third row slits are oriented laterally relative to the bottom row slits and the second row is laterally offset from the third row slits.

US 2005 0244311	(Hydrocarbon Technologies)	1/27/2005

A bubble cap grid plate suitable for heavy petroleum or tar sands oils produces small hydrogen bubbles that accelerate mass transfer into the oil. The design is distinguished by a tapered cap and a double pipe inlet. The design also results in less pressure drop and eliminates the vibration or pulsation problems experienced by single pipe bubble caps.

US 2007 0138061	Fenoil Inc.	12/21/2005

A method and apparatus for introducing a heavy oil into a hydrocracker are claimed. The method comprises optionally mixing hydrogen with the oil, atomizing the oil and injecting the atomized liquid into the reactor. The apparatus is an injection valve with or without a mixer before an atomizer consisting in a simplified version of 4 to 12 orifices oriented at an angle between 5 and 30 degrees to the longitudinal axis of the valve. The mixer comprises at least one swirl device with chambers having a nozzle expelling the fluid with a swirl into an annular space to create the mixture of hydrogen and oil.

US 2007 0140927	Chevron Texaco Corporation	12/16/2005

A slurry catalytic reactor operates in the dispersed bubble flow regime, which requires a high liquid-to-gas ratio but results in more even flow patterns. The upflow reactor contains a liquid recirculating downcomer that acts to maintain the bubble flow regime and to keep the catalyst concentration and temperature profiles along the length of the reactor as even as possible. The amount of liquid that can be charged to a single reactor is increased.

US 2007 0215524	ExxonMobil Chemical Company	5/22/2007

A highly efficient separation apparatus for separating vapor-steam/liquid mixtures features a cylindrical drum with tangential inlet and an annular structure in the middle section. The annular structure blocks upward passage of the vapor/liquid mixture along the wall and surrounds an open core of sufficient cross sectional area to provide a low enough vapor velocity to avoid significant liquid entrainment. A cylindrical boot of smaller diameter than the middle section is located at the bottom provides an inlet for charging quench oil and has an outlet at its bottom.

Table A.1 (Concluded)
RESID HYDROCRACKING APPARATUS

PATENT SUMMARY

Reference Number	Assignee	Earliest Date Shown
US 6270654	IFP North America, Inc.	8/18/93

A catalytic multi-stage ebullated bed reactor system for heavy feedstocks has maximized catalyst loading and increased liquid residence time in each reactor by using an external gas/liquid separator combined with lower superficial upward gas velocities and reduced gas hold-up in each reactor. The reactor superficial gas velocity in each unit ranges from 0.025-0.20 ft/sec. Liquid hourly space velocity ranges from 0.40-1.2 B/day/lb catalyst.

US 6299759	Mobil Oil Corporation	2/13/98

A temperature and pressure drop hydrocracker control method for a system of multiple catalyst beds introduces cooler, liquid fresh feed into at least one quench zone after the first catalyst bed. The first bed at least contains hydrotreating catalyst. Hydrogen quench gas is also added. The temperatures and feed rates of the liquid and gaseous quench streams are controlled to control the temperature of the effluent entering the next catalyst bed. The process is particularly adaptable to hydrocracking heavy oils.

US 6517706	Petro-Canada	5/1/2000

A slurry feed of a heavy oil feedstock and coke-inhibiting additive particles is fed with hydrogen-containing gas upward through a hydrocracking reactor. The additive particles are less than about 30 microns, preferably less than about 10 microns in diameter. The slurry feed mixture and a portion of the hydrogen-containing gas are fed through an injector at the bottom of the reactor. The balance of the gas is fed into the reactor through injection nozzles within the reactor at a location above the slurry-feed injector. The combined feed and gas are injected at a velocity sufficient to maintain the additive particles in suspension throughout the vessel. Coking reactions are prevented.

US 6960325	Hydrocarbon Technologies	8/22/2002

A catalytic hydrocracker reactor vessel for the conversion of heavy petroleum residue, tar sands and coal residue. The apparatus comprises a reactor cup shell-in -shell riser for receiving and separating liquid and vapor product, a bubble cap grid plate. The catalyst bed may be ebullating, fluid bed, fixed or slurry bed. Optionally, the vessel contains an inlet pipe sparger having downward directed slotted openings and a liquid recycle inlet distributor.

Table A.2
RESID HYDROCRACKING CATALYSTS

PATENT SUMMARY

Reference Number	Assignee	Earliest Date Shown
US 2005 0115870		11/16/2004

A hydrocracking catalyst comprises activated carbon extrudate as a carrier that is activated by steam and has a pore size distribution with a high percentage in the range of 20 to 200 nm. The catalytic metal is iron, nickel and cobalt or molybdenum, both nickel and molybdenum or both cobalt and molybdenum. Asphaltenes easily diffuse into the large pores where the metal impurities, such as nickel and vanadium, are removed and captured. A process for manufacturing the catalyst is also claimed.

US 2006 0079398	Chevron Texaco Corporation	12/28/2005

A highly homogeneous, amorphous silica-alumina cogel material is used alone or with another catalyst in a hydrocracking process for higher activity and better product selectivity compared to other silica-alumina catalysts. The material has a surface to bulk silica to alumina ratio of about 0.7 to 1.3, most preferably about 1.0 with a crystalline phase present at no more than about 10%, preferably about 5%. The material is applicable to residue feedstocks.

US 2007 0125684	Shell Oil Company	9/14/2005

A catalyst composition capable of hydrocracking a wide range of feedstocks including residues contains an amorphous silica-alumina and zeolite carrier, a Group VIII metal (nickel, cobalt or their mixtures, preferably nickel), a Group VIB metal (molybdenum or tungsten, preferably tungsten) and boron as the sole promoter. A preparation process for the catalyst and a process using the catalyst are also claimed.

US 2007 0131586		12/12/2005

Methane production is reduced by a non-sulfided hydrocracking catalyst consisting of nickel and tin on silica-alumina. Nickel content is at least 1 wt% and silica content is at least 20 wt% in the form of silica-alumina.

US 2007 0158239	The BOC Group, Inc.	9/21/2006

A process produces distillates from heavy oil by sequential hydrocracking in an ebullating bed to form a hydrogen donor oil followed immediately by high temperature, short residence time thermal treatment and quenching. The hydrocracking is conducted using both supported and colloidal catalyst under conditions adding 100 to 500 SCF/B of hydrogen to the oil. The supported catalyst is a conventional large pore NiMO/alumna or CoMo/alumina. The colloidal catalyst is a conventional molybdenum disulfide catalyst. Heating for thermal treatment at 932 to 1472°F (500 to 800°C) is by direct contact with high velocity combustion products.

Table A.2 (Continued)
RESID HYDROCRACKING CATALYSTS

PATENT SUMMARY

Reference Number	Assignee	Earliest Date Shown
US 2007 0278135	ExxonMobil Research & Engineering Company	6/2/2006

A hydrocracking process converts heavy oil containing greater than about 3,000 ppmw sulfur by a hydrotreating pretreatment with the effluent directly hydrocracked. The hydrocracked effluent is passed without separation over a post-treatment hydrodesulfurization catalyst. The post-treatment hydrodesulfurization catalyst is a bulk multi-metallic catalyst that produces a liquid product stream having less than about 100 ppmw sulfur. The specified multi-metallic catalyst is comprised of at least one Group VIII non-noble metal (preferably cobalt and nickel) and at least two Group VIB metals (preferably a combination of molybdenum and tungsten). The catalyst can have a high activity for removal of high-boiling sulfur compounds. A layer of multi-metallic catalyst may replace a layer of post-treatment catalyst to produce an ultra low sulfur diesel product as well as naphtha acceptable for reformer feed.

US 5948721	China Petro-Chemical Corporation/ Fushun Research Institute of Petroleum and Petrochemicals, Sinopec	11/22/95

A dispersing-type hydrocracking catalyst for heavy oil and residuum comprises 2 to 15 wt% Mo, 0.1 to 2 wt% Ni and 0.1 to 3 wt% P in the form of an aqueous solution. The catalyst can uniformily disperse into heavy oil and residuum and reduce the yield of coke. A method of preparing the catalyst is also disclosed.

US 5954944	China Petrochemical Corp. and Research Institute of Petroleum Processing, Sinopec	6/28/96

A process can be used to produce middle distillates uses a specified hydrotreating catalyst and a specified hydrocracking catalyst in series and once-through operation from catalytically cracked cycle oil blended with residual oil. The end point of the mixture is preferably 932-1076F (500-580C) with nitrogen content up to 500 ppmw and sulfur content up to 3.5 wt%. The hydrocracking catalyst is composed of 0.5-5.0 wt% fluorine, 2.5-6.0 wt% nickel oxide, 10-38 wt% tungsten oxide and a carrier. The carrier is composed of 20-90 wt% alumina and 10-80 wt% a mesopore or macropore zeolite with an acid strength value of 1.0-2.0 mmol/g as determined by ammonia temperature programmed desorption. Similarly, the alumina has an acid strength value of 0.5--.8 mmol/g.

Table A.2 (Continued)
RESID HYDROCRACKING CATALYSTS

PATENT SUMMARY

Reference Number	Assignee	Earliest Date Shown
US 5954945	BP Amoco Corporation	3/27/97

A catalytic slurry hydrocracking process comprises suspending metal sulfide particles and oxide particles in a reactor, the particles charged as precursor fluids. The sulfide particle precursor includes a sulfidable metal of the group of molybdenum, cobalt, nickel, iron, vanadium, tungsten and their mixtures. The oxide particle precursor includes metals selected from magnesium, aluminum, silicon, phosphorous, calcium, scandium, titanium, gallium, germanium, zirconium, cerium and their mixtures. The precursors are susceptible upon heating to precipitation which produces particles composed essentially respectively of metal sulfide particles or oxide particles. The oxide particles are associated with a significant reduction of coke production.

US 6004454	China Petro-Chemical Corporation/ Fushun Research Institiute of Petroleum and Petrochemicals, SINOPEC	11/22/96

Slurry hydrocracking process uses a non-supported catalyst composed of 2 to 15 wt% molybdenum, 0.1 to 2% nickel and 0.1 to 3% phosphorous in an aqueous solution. The catalyst is added to heavy oil or residuum to 150-1500 ppm active metals. For high viscosity oils, the catalyst is first mixed with a low viscosity residuum and that mixture is then mixed with the high viscosity oil.

US 6068758 6/12/97

A hydrocracking process for heavy oil feedstocks containing asphaltenes uses a catalyst comprising a mixture of residual asphaltene and metal-doped coke. The catalyst is produced by mixing an oil-soluble metal compound catalyst precursor, a molybdenum or nickel soap for example, with heavy oil containing asphaltene and hydrocracking the mixture. A solid coke byproduct is produced. The asphaltene fraction in the hydrocracked effluent is precipitated, with n-pentane for example. The mixture of coke precipitated asphaltene is separated and used as the catalyst in subsequent hydrocracking. The recovered catalyst mixture is as effective as the original metal soap and is still an effective catalyst when used again, without experiencing a significant loss of activity. Recovered coke alone is found to be only weakly catalytically active while the asphaltene alone is non-catalytic. The mixture was strongly catalytically active.

US 6093309 CRI International, Inc. 5/4/93

An improved method of presulfiding metal oxide containing hydrocracking catalyst first incorporates sulfur into the catalyst pores and then contacts the catalyst with an oxygen-containing hydrocarbon having at least 12 carbon atoms. Spontaneous combustion of the catalyst is suppressed without substantially comprising sulfur retention or activity. Hydrocracking product yield is improved.

Table A.2 (Continued)
RESID HYDROCRACKING CATALYSTS

PATENT SUMMARY

Reference Number	Assignee	Earliest Date Shown
US 6174429	Institut Francais du Petrole	10/20/98

A catalyst composition is disclosed for hydrocracking deasphalted or hydrotreated residues containing at most traces of metals and 1 to 5000 ppmw nitrogen and less than 5 wt% sulfur. The catalyst is composed of at least one metal of group VIB (molybdenum or in particular tungsten) and at least one metal of group VIII (particularly cobalt or nickel) of the periodic table on an alumina matrix. phosphorous and optionally at least one element from group VIIA (preferably flourine) and a zeolite Y that is not fully dealuminated such as a faujasite. The catalyst has good activity and stability with high nitrogen feedstocks.

US 6242378	Institut Francais du Petrole	6/25/98

A process is disclosed for sulfurizing supported catalysts containing at least one element for group IIIB, including the lanthanides and actinides, group IVB and group VB of the periodic table. The catalyst is sulfurized using a mixture containing at least one source of elemental sulfur and at least one carbon source in an autogeneous or inert atmosphere.

US 6258259	Asashi Kasei Kabushiki Kaisha	5/24/96

A heavy oil hydrocracking process uses an iron sulfide catalyst of specified composition. A process for producing the iron sulfide catalyst is also disclosed.

US 6274530	BP Corporation North America Inc.	3/27/97

A slurry hydrocracking catalyst composition for treating resdiue feedstocks is preprepared from a hydrogenation catalyst particle precursor and an oxide particle precursor fluids. The sulfide particle precursor includes a sulfidable metal of the group of molybdenum, cobalt, nickel, iron, vanadium, tungsten and their mixtures. The oxide particle precursor includes metals selected from magnesium, aluminum, silicon, phosphorous, calcium, scandium, titanium, gallium, germanium, zirconium, cerium and their mixtures. The precursors are susceptible upon heating to precipitation which produces particles composed essentially respectively of metal sulfide particles or oxide particles. The oxide particles are associated with a significant reduction of coke production.

Table A.2 (Continued)
RESID HYDROCRACKING CATALYSTS

PATENT SUMMARY

Reference Number	Assignee	Earliest Date Shown
US 6291391	IFP North America, Inc.	11/12/98

Hydrocracking catalyst for charging to a continuous reactor is presulfided and preconditioned to maximize the catalytic activity, to be safe and stable and to be brought to severe hydrocracking conditions rapidly without rapid low of activity. The metal oxide of the catalyst is presulfided by exposure to a H_2S and H_2 rich streams from within the hydrocracker at between about 300°F (149°C) and 750°F (399°C) to increase the sulfur content of the treated catalyst to 5 to 15 wt%. The presulfided catalyst is then preconditioned by passing a liquid hydrocarbon stream such as an atmospheric or vacuum gas oil and H_2S and H_2 rich stream across the catalysts at about 500°F (260°C) to 750°F (399°C) for 15 min. to 10 hours in order to deposit a carbon layer (1 to 5 wt%) on the catalyst. The process is conducted without interrupting the continuous operation of the resid hydrocracker.

US 6316382	Institut Francais du Petrole	6/25/98

A process is disclosed for sulfurizing supported catalysts containing at least one element fo group IIIB, including the lanthanides and actinides, group IVB, group VB and group VIB of the periodic table. The catalyst is pre-reduced with at least one reducing gas other than hydrogen before sulfurizing the catalyst. The treated catalyst has improved activity over prior methods.

US 6667267	Institut Francais du Petrole	2/24/99

A hydrocracking catalyst based on IM-5 zeolite can achieve improved activity and selectivity for kerosene and gasoline compared to prior catalysts. The catalyst comprises at least one matrix, an IM-5 zeolite, at least one metal of group VIB or group VIII of the periodic table. Optionally at least one promoter element selected from phosphorous, boron and silicon and optionally at least one group VIIA (preferably fluorine), group VIIB (preferably manganese) and/or group VB (particularly niobium) element. The metals may be present as metal, oxide or sulfide.

US 6670295	China Petroleum & Chemical Corporation,	10/26/2000
	Fushun Research Institute of Petroleum & Petrochemicals Sinopec Corp.	

A hydrocracking catalyst converts heavy oils having high contents of nitrogen and sulfur with high activity and selectivity to middle distillates. The solidifying point of the diesel is lowered. The catalyst support comprises a modified zeolite-Y, a modified zeolite-beta, alumina. The composite of the modified zeolites Y and beta exhibits a catalytically synergistic effect. Metals of groups VIB and VIII of the periodic table are supported.

Table A.2 (Concluded)
RESID HYDROCRACKING CATALYSTS

PATENT SUMMARY

Reference Number	Assignee	Earliest Date Shown
US 6797153	Petroleum Energy Center, Toyo Engineering Corporation	4/28/99

A hydrocracking catalyst contains iron and active carbon. The carbon has a methyl cyclohexane rate (the ratio of peak area in methyl cyclohexane dehydration to toluene to the whole peak area) of 40-80%, a specific surface area of 600-1000 m2/g, a pore volume of 0.5 to 1.4 cm3/g, 2-50 nanometers mesopore volume of not less than 60% and an average pore diameter of 3-6 nanometers. The iron content is 1 to 20 wt%. The catalyst is used as the first step in hydrocracking heavy and extra heavy oils with a temperature range of 680-842F (360-450C) and a hydrogen partial pressure of 2-14 MPaG. The second hydrocracking step is within the temperature range of 752-896F (400-480C) and a hydrogen partial pressure of 2-18 MPaG. The process suppresses the generation of coke and with high efficiency removes metals (such as Ni and V), asphaltene, residual carbon, sulfur and nitrogen from heavy oils.

US 7192900	Shell Oil Company	11/24/2003

A hydrocracking catalyst suitable for heavy oil feedstocks comprises a metal hydrogenation metal (molybdenum, tungsten, cobalt, nickel and combinations of two or more) on a carrier containing an amorphous binder and 2 to 80 wt% faujasite zeolite. The specifications of the zeolite include a unit cell size ranging from 24.14 to 24.38 A, a bulk silica-to-alumina ratio above 12, a surface area at least about 850 m^2/g and a micropore volume at least about 0.28 ml/g. The catalyst is selective for middle distillates.

US 7270738	Institut Francais du Petrole	10/30/2002

Hydrocracking catalysts use a specified non-zeolitic silica-alumina based substrate with at least one hydro-dehydrogenating metal selected from group VIB (particularly molybdenum and tungsten) and group VII (particularly nickel and cobalt) of the periodic table.

US 7300900	Institut Francais du Petrole	3/24/2003

A hydrocracking catalyst contains at least one zeolite of ZBM-30, ZSM-48, EU-2 or EU-11, at least one Y zeolite and at least one hydro-dehydrogenating metal from Group VIB or Group VII of the periodic table. The catalyst optionally contains at least one of phosphorus, boron and silicon and optionally at least one element from Group VIIA and optionally at least one from Group VIIB.

Table A.3
RESID HYDROCRACKING PROCESSES

PATENT SUMMARY

Reference Number	Assignee	Earliest Date Shown
US 2005 0115870		11/16/2004

A hydrocracking catalyst comprises activated carbon extrudate as a carrier that is activated by steam and has a pore size distribution with a high percentage in the range of 20 to 200 nm. The catalytic metal is iron, nickel and cobalt or molybdenum, both nickel and molybdenum or both cobalt and molybdenum. Asphaltenes easily diffuse into the large pores where the metal impurities, such as nickel and vanadium, are removed and captured. A process for manufacturing the catalyst is also claimed.

US 2006 0079398	Chevron Texaco Corporation	12/28/2005

A highly homogeneous, amorphous silica-alumina cogel material is used alone or with another catalyst in a hydrocracking process for higher activity and better product selectivity compared to other silica-alumina catalysts. The material has a surface to bulk silica to alumina ratio of about 0.7 to 1.3, most preferably about 1.0 with a crystalline phase present at no more than about 10%, preferably about 5%. The material is applicable to residue feedstocks.

US 2007 0125684	Shell Oil Company	9/14/2005

A catalyst composition capable of hydrocracking a wide range of feedstocks including residues contains an amorphous silica-alumina and zeolite carrier, a Group VIII metal (nickel, cobalt or their mixtures, preferably nickel), a Group VIB metal (molybdenum or tungsten, preferably tungsten) and boron as the sole promoter. A preparation process for the catalyst and a process using the catalyst are also claimed.

US 2007 0131586		12/12/2005

Methane production is reduced by a non-sulfided hydrocracking catalyst consisting of nickel and tin on silica-alumina. Nickel content is at least 1 wt% and silica content is at least 20 wt% in the form of silica-alumina.

US 2007 0158239	The BOC Group, Inc.	9/21/2006

A process produces distillates from heavy oil by sequential hydrocracking in an ebullating bed to form a hydrogen donor oil followed immediately by high temperature, short residence time thermal treatment and quenching. The hydrocracking is conducted using both supported and colloidal catalyst under conditions adding 100 to 500 SCF/B of hydrogen to the oil. The supported catalyst is a conventional large pore NiMO/alumna or CoMo/alumina. The colloidal catalyst is a conventional molybdenum disulfide catalyst. Heating for thermal treatment at 932 to 1472°F (500 to 800°C) is by direct contact with high velocity combustion products.

Table A.3 (Continued)
RESID HYDROCRACKING PROCESSES

PATENT SUMMARY

Reference Number	Assignee	Earliest Date Shown
US 2007 0278135	ExxonMobil Research & Engineering Company	6/2/2006

A hydrocracking process converts heavy oil containing greater than about 3,000 ppmw sulfur by a hydrotreating pretreatment with the effluent directly hydrocracked. The hydrocracked effluent is passed without separation over a post-treatment hydrodesulfurization catalyst. The post-treatment hydrodesulfurization catalyst is a bulk multi-metallic catalyst that produces a liquid product stream having less than about 100 ppmw sulfur. The specified multi-metallic catalyst is comprised of at least one Group VIII non-noble metal (preferably cobalt and nickel) and at least two Group VIB metals (preferably a combination of molybdenum and tungsten). The catalyst can have a high activity for removal of high-boiling sulfur compounds. A layer of multi-metallic catalyst may replace a layer of post-treatment catalyst to produce an ultra low sulfur diesel product as well as naphtha acceptable for reformer feed.

US 5948721	China Petro-Chemical Corporation/ Fushun Research Institute of Petroleum and Petrochemicals, Sinopec	11/22/95

A dispersing-type hydrocracking catalyst for heavy oil and residuum comprises 2 to 15 wt% Mo, 0.1 to 2 wt% Ni and 0.1 to 3 wt% P in the form of an aqueous solution. The catalyst can uniformily disperse into heavy oil and residuum and reduce the yield of coke. A method of preparing the catalyst is also disclosed.

US 5954944	China Petrochemical Corp. Research Institute of Petroleum Processing, Sinopec	6/28/96

A process can be used to produce middle distillates uses a specified hydrotreating catalyst and a specified hydrocracking catalyst in series and once-through operation from catalytically cracked cycle oil blended with residual oil. The end point of the mixture is preferably 932-1076°F (500-580°C) with nitrogen content up to 500 ppmw and sulfur content up to 3.5 wt%. The hydrocracking catalyst is composed of 0.5-5.0 wt% fluorine, 2.5-6.0 wt% nickel oxide, 10-38 wt% tungsen oxide and a carrier. The carrier is composed of 20-90 wt% alumina and 10-80 wt% a mesopore or macropore zeolite with an acid strength value of 1.0-2.0 mmol/g as determined by ammonia temperature programmed desorption. Similarly, the alumina has an acid strength value of 0.5--.8 mmol/g.

Table A.3 (Continued)
RESID HYDROCRACKING PROCESSES

PATENT SUMMARY

Reference Number	Assignee	Earliest Date Shown
US 5954945	BP Amoco Corporation	3/27/97

A catalytic slurry hydrocracking process comprises suspending metal sulfide particles and oxide particles in a reactor, the particles charged as precursor fluids. The sulfide particle precursor includes a sulfidable metal of the group of molybdenum, cobalt, nickel, iron, vanadium, tungsten and their mixtures. The oxide particle precursor includes metals selected from magnesium, aluminum, silicon, phosphorous, calcium, scandium, titanium, gallium, germanium, zirconium, cerium and their mixtures. The precursors are susceptible upon heating to precipitation which produces particles composed essentially respectively of metal sulfide particles or oxide particles. The oxide particles are associated with a significant reduction of coke production.

US 6004454	China Petro-Chemical Corporation/ Fushun Research Institute of Petroleum and Petrochemicals, SINOPEC	11/22/96

Slurry hydrocracking process uses a non-supported catalyst composed of 2 to 15 wt% molybdenum, 0.1 to 2% nickel and 0.1 to 3% phosphorous in an aqueous solution. The catalyst is added to heavy oil or residuum to 150-1500 ppm active metals. For high viscosity oils, the catalyst is first mixed with a low viscosity residuum and that mixture is then mixed with the high viscosity oil.

US 6068758		6/12/97

A hydrocracking process for heavy oil feedstocks containing asphaltenes uses a catalyst comprising a mixture of residual asphaltene and metal-doped coke. The catalyst is produced by mixing an oil-soluble metal compound catalyst precursor, a molybdenum or nickel soap for example, with heavy oil containing asphaltene and hydrocracking the mixture. A solid coke byproduct is produced. The asphaltene fraction in the hydrocracked effluent is precipitated, with n-pentane for example. The mixture of coke precipitated asphaltene is separated and used as the catalyst in subsequent hydrocracking. The recovered catalyst mixture is as effective as the orignial metal soap and is still an effective catalyst when used again, without experiencing a significant loss of activity. Recovered coke alone is found to be only weakly catalytically active while the asphaltene alone is non-catalytic. The mixture was strongly catalytically active.

US 6093309	CRI International, Inc.	5/4/93

An improved method of presulfiding metal oxide containing hydrocracking catalyst first incorporates sulfur into the catalyst pores and then contacts the catalyst with an oxygen-containing hydrocarbon having at least 12 carbon atoms. Spontaneous combustion of the catalyst is suppressed without substantially comprising sulfur retention or activity. Hydrocracking product yield is improved.

Table A.3 (Continued)
RESID HYDROCRACKING PROCESSES

PATENT SUMMARY

Reference Number	Assignee	Earliest Date Shown
US 6174429	Institut Francais du Petrole	10/20/98

A catalyst composition is disclosed for hydrocracking deasphalted or hydrotreated residues containing at most traces of metals and 1 to 5000 ppmw nitrogen and less than 5 wt% sulfur. The catalyst is composed of at least one metal of group VIB (molybdenum or in particular tungsten) and at least one metal of group VIII (particularly cobalt or nickel) of the periodic table on an alumina matrix. Phosphorous and optionally at least one element from group VIIA (preferably fluorine) and a zeolite Y that is not fully dealuminated such as a faujasite. The catalyst has good activity and stability with high nitrogen feedstocks.

US 6242378	Institut Francais du Petrole	6/25/98

A process is disclosed for sulfurizing supported catalysts containing at least one element of group IIIB, including the lanthanides and actinides, group IVB and group VB of the periodic table. The catalyst is sulfurized using a mixture containing at least one source of elemental sulfur and at least one carbon source in an autogeneous or inert atmosphere.

US 6258259	Asashi Kasei Kabushiki Kaisha	5/24/96

A heavy oil hydrocracking process uses an iron sulfide catalyst of specified composition. A process for producing the iron sulfide catalyst is also disclosed.

US 6274530	BP Corporation North America Inc.	3/27/97

A slurry hydrocracking catalyst composition for treating residue feedstocks is prepared from a hydrogenation catalyst particle precursor and an oxide particle precursor fluids. The sulfide particle precursor includes a sulfidable metal of the group of molybdenum, cobalt, nickel, iron, vanadium, tungsten and their mixtures. The oxide particle precursor includes metals selected from magnesium, aluminum, silicon, phosphorous, calcium, scandium, titanium, gallium, germanium, zirconium, cerium and their mixtures. The precursors are susceptible upon heating to precipitation which produces particles composed essentially respectively of metal sulfide particles or oxide particles. The oxide particles are associated with a significant reduction of coke production.

Table A.3 (Continued)
RESID HYDROCRACKING PROCESSES

PATENT SUMMARY

Reference Number	Assignee	Earliest Date Shown
US 6291391	IFP North America, Inc.	11/12/98

Hydrocracking catalyst for charging to a continuous reactor is presulfided and preconditioned to maximize the catalytic activity, to be safe and stable and to be brought to severe hydrocracking conditions rapidly without rapid low of activity. The metal oxide of the catalyst is presulfided by exposure to a H_2S and H_2 rich streams from within the hydrocracker at between about 300°F (149°C) and 750F (399°C) to increase the sulfur content of the treated catalyst to 5 to 15 wt%. The presulfided catalyst is then preconditioned by passing a liquid hydrocarbon stream such as an atmospheric or vacuum gas oil and H_2S and H_2 rich stream across the catalysts at about 500°F (260°C) to 750°F (399°C) for 15 min. to 10 hours in order to deposit a carbon layer (1 to 5 wt%) on the catalyst. The process is conducted without interrupting the continuous operation of the resid hydrocracker.

US 6316382	Institut Francais du Petrole	6/25/98

A process is disclosed for sulfurizing supported catalysts containing at least one element of group IIIB, including the lanthanides and actinides, group IVB, group VB and group VIB of the periodic table. The catalyst is pre-reduced with at least one reducing gas other than hydrogen before sulfurizing the catalyst. The treated catalyst has improved activity over prior methods.

US 6667267	Institut Francais du Petrole	2/24/99

A hydrocracking catalyst based on IM-5 zeolite can achieve improved activity and selectivity for kerosene and gasoline compared to prior catalysts. The catalyst comprises at least one matrix, an IM-5 zeolite, at least one metal of group VIB or group VIII of the periodic table. Optionally at least one promoter element selected from phosphorous, boron and silicon and optionally at least one group VIIA (preferably fluorine), group VIIB (preferably manganese) and/or group VB (particularly niobium) element. The metals may be present as metal, oxide or sulfide.

US 6670295	China Petroleum & Chemical Corporation,	10/26/2000
	Fushun Research Institute of Petroleum & Petrochemicals Sinopec Corp.	

A hydrocracking catalyst converts heavy oils having high contents of nitrogen and sulfur with high activity and selectivity to middle distillates. The solidifying point of the diesel is lowered. The catalyst support comprises a modified zeolite-Y, a modified zeolite-beta, alumina. The composite of the modified zeolites Y and beta exhibits a catalytically synergistic effect. Metals of groups VIB and VIII of the periodic table are supported.

Table A.3 (Concluded)
RESID HYDROCRACKING PROCESSES

PATENT SUMMARY

Reference Number	Assignee	Earliest Date Shown
US 6797153	Petroleum Energy Center, Toyo Engineering Corporation	4/28/99

A hydrocracking catalyst contains iron and active carbon. The carbon has a methyl cyclohexane rate (the ratio of peak area in methyl cyclohexane dehydration to toluene to the whole peak area) of 40-80%, a specific surface area of 600-1000 m2/g, a pore volume of 0.5 to 1.4 cm3/g, 2-50 nanometers mesopore volume of not less than 60% and an average pore diameter of 3-6 nanometers. The iron content is 1 to 20 wt%. The catalyst is used as the first step in hydrocracking heavy and extra heavy oils with a temperature range of 680-842F (360-450C) and a hydrogen partial pressure of 2-14 MPaG. The second hydrocracking step is within the temperature range of 752-896F (400-480C) and a hydrogen partial pressure of 2-18 MPaG. The process suppresses the generation of coke and with high efficiency removes metals (such as Ni and V), asphaltene, residual carbon, sulfur and nitrogen from heavy oils.

US 7192900	Shell Oil Company	11/24/2003

A hydrocracking catalyst suitable for heavy oil feedstocks comprises a metal hydrogenation metal (molybdenum, tungsten, cobalt, nickel and combinations of two or more) on a carrier containing an amorphous binder and 2 to 80 wt% faujasite zeolite. The specifications of the zeolite include a unit cell size ranging from 24.14 to 24.38 A, a bulk silica-to-alumina ratio above 12, a surface area at least about 850 m^2/g and a micropore volume at least about 0.28 ml/g. The catalyst is selective for middle distillates.

US 7270738	Institut Francais du Petrole	10/30/2002

Hydrocracking catalysts use a specified non-zeolitic silica-alumina based substrate with at least one hydro-dehydrogenating metal selected from group VIB (particularly molybdenum and tungsten) and group VII (particularly nickel and cobalt) of the periodic table.

US 7300900	Institut Francais du Petrole	3/24/2003

A hydrocracking catalyst contains at least one zeolite of ZBM-30, ZSM-48, EU-2 or EU-11, at least one Y zeolite and at least one hydro-dehydrogenating metal from Group VIB or Group VII of the periodic table. The catalyst optionally contains at least one of phosphorus, boron and silicon and optionally at least one element from Group VIIA and optionally at least one from Group VIIB.

Appendix B

DESIGN AND COST BASES

DESIGN AND COST BASES

DESIGN CONDITIONS

Design and cost calculations are based on an assumed plant location along the U.S. Gulf Coast at Houston, Texas. Particular temperature assumptions are:

Dry bulb air temperature	100°F (38°C)
Wet bulb air temperature	80°F (27°C)
Groundwater temperature	80°F (27°C)
Cooling water temperature	85°F (29°C)
Cooling water temperature rise	20°F (11°C)
Chilled water temperature	50°F (10°C)
Chilled water temperature rise	up to 20°F (11°C)

Columns and vessels were sized respectively for 80% of flooding.

The usual definitions of terms relating to yield are used in this report. They are as follows:

Conversion	Ratio of material reacted to material fed, stated in percent or fraction
Selectivity	Ratio of product desired to material reacted, stated in percent or fraction of material reacted
Yield per pass	Ratio of product desired to material fed, stated in percent or fraction of material fed = Conversion x Selectivity

COST BASES

Below, we outline the criteria for calculating capital investment and production costs, and the effect of the operating level on production costs.

Capital Investment

Equipment costs are estimated primarily from correlations using the PEP Cost database, version 3.1.5 [PEP Reports 145 *Battery Limits Cost Estimating* (April 1982) and 162 *Computer Program for Estimating Plant Investment* (March 1985)] developed by PEP and supplemented occasionally by vendors' estimates. If an equipment item is specialized or contributes substantially to the cost of the facility, a vendors' quote has been obtained if possible. When necessary, the costs are corrected to a PEP Cost Index of 768 (midyear 2007).

Direct installation costs are estimated by a modular method developed by PEP; the details are described in detail in PEP Report 145, *Battery Limits Cost Estimating* (April 1982). The indirect costs in capital investment are estimated by adding allowances for engineering, field expenses, overhead, purchasing, and contractor's profit. The bases for the estimation of these allowances are detailed in Section 7 of PEP Report 162, *Computer Program for Estimating Plant Investment* (March 1985). These indirect cost estimates are then added to the direct investment (FOB costs plus direct installation costs) to get the overall installed costs.

Investment in utilities is computed for the entire plant and allocated to each major operation according to use. Indirect costs for utilities and off-site tankage (generally raw material and product storage) are assumed to be 20% of the direct utilities investment.

General service facilities not directly associated with process operations are shown as an allowance (assumed to be 20**%** of the battery limits installed cost and utilities-plus-storage investment). General services facilities includes items such as roads, parking, fences, administrative offices, craft shops, fire and safety equipment, plant communications and warehouses. An allowance is also made for investments to expand or provide waste treatment facilities, including ground water collection and treatment. These allowances are determined prior to the addition of contingencies to the installed costs.

The total fixed capital for the facility includes total investment in battery limits, utilities and tankage, general service facilities, and a contingency. Usually the contingency for large generic petroleum refinery processes is taken as 15% each of the battery limits investment and the off-site investment. All of the above investment estimates have been calculated with the aid of SRI Consulting's PEPCOST II computer program.

In comparing SRIC's estimates with actual plant costs or contractors' estimates, the following should be borne in mind:

- The processes may be the same generally but differ enough in detail to affect costs significantly.
- The estimates may not be strictly comparable because of omission of process sections (for example, by-product recovery) in one or another of the designs.
- Actual plants are frequently over designed for reasons unique to the particular situations.
- During periods of rapid escalation of equipment costs, and when long delivery times are anticipated, cost indexes probably are not an accurate reflection of actual costs.
- During periods of depression in chemical plant construction, equipment vendors and engineering contractors will provide goods and services at little or no profit.

Production Costs

The operating labor wages are based on estimated prevailing rates in Houston, Texas. The base rate is derived from U.S. national average rates in industrial chemical plants, corrected to the Houston area on a relative basis for production workers. With an allowance for fringe benefits and a 10% shift overlap assumed, the effective total rate is $42.54 per hour. The operating labor requirements have been estimated subjectively on the basis of the number of major equipment items in the process. A completely computer automated plant with a central control room is assumed where several smaller units may be controlled by one operator. The number of men per shift includes the working foremen. Control laboratory labor is assumed to be 20% of operating labor. The cost of staff supervision—such as the assistant operating department manager, etc.—is assumed to be included in our allowance for plant overhead.

The total maintenance costs are estimated to be 3% of the battery limits investment. In each case, we have assumed a 60-40 split between materials and labor.

Plant overhead has arbitrarily been assumed at 80% of total labor. It includes all staff personnel located at the plant site, and services directly associated with plant operations and maintenance.

G&A, sales, and research costs are assumed for each product by making allowances for the stage of process development in estimating research expense, and for the character of marketing

channels and technical service requirements in estimating selling expense. These estimates are customarily assigned a percentage of the sales value of the product, generally in the range of 5-30% for specialty plants, but lower or even negligible for large commodity plants such as petroleum refineries. When actual prices are unknown, we base the G&A, sales, and research expense on the calculated product value (total production cost plus 25%/yr pretax return on fixed capital).

The cost of taxes and insurance is calculated at 2% of total fixed capital. Depreciation is based on 10%/yr of fixed capital.

Effect of Operating Level on Production Costs

Variations in production costs with plant capacity and with operating rate are based on the following assumptions:

- The annual costs of process plant operating labor, control laboratory labor, and operating materials are invariant with plant capacity. Also, the entire process plant labor force remains on the payroll when the plant is operating at reduced capacity or is shut down.
- Investment-related items, including maintenance labor, maintenance materials, taxes, and depreciation, are directly proportional to investment, and their annual cost remains constant with reduced operating rate.
- Corporate overhead charges are constant to various plant capacities, and the annual allocation is also constant, regardless of plant operating rate.
- Production costs generally do not include any allowance for packaging or shipping; i.e., they represent bulk costs, FOB plant.
- Working capital is not included in the fixed capital cost, nor are start-up costs. Interest on working capital is not included in the production cost or in the product value.
- Royalties are not included in any of the estimates. Royalties for any given licensed process may vary considerably, depending on terms of the agreement, geographic location, etc. Initial payments or paid-up royalties may be substantial, and they should be considered in specific estimates.
- Annual costs for raw materials and utilities are directly proportional to the annual plant production.

In accordance with the last assumption, unit costs for raw materials and utility consumptions do not change with either plant capacity or operating rate.

Appendix C

CITED REFERENCES

Accession Number

211B015	Matsumura, A., et al., "Hydrocracking Brazilian Marlim Vacuum Residue with Natural Limonite. Part 1: Catalytic Activity of Natural Limonite," Fuel 84, 4 (Mar., 2005), 411-16
211B016	Lopez Salinas, E., et al., "Long-Term Evaluation of NiMo/Alumina-Carbon Black Composite Catalysts in Hydroconversion of Mexican 538°C+ Vacuum Residue," Catal. Today 109, 1-4 (Nov. 30, 2005), 69-75
211B018	Zhao, S., et al., "Systematic Characterization of Petroleum Residua Based on SFEF," Fuel 84, 6 SPEC. ISS. (Apr., 2005), 635-45
211B021	Chung, K. H., et al., "Narrow-Cut Characterization Reveals Resid Process Chemistry," Fuel, 80, 8 (June 11, 2001), 1165-77
211B024	Liu Haiyan, et al., "Identification of Key Oil Refining Technologies for China National Petroleum Co. (CNPC)," Energy Policy 35, 4 (Apr. 15, 2007), 2635-47 (DOI: 10.1016/j.Enpol.2006.09.014: PII: S0301-4215(06)00362-4) International Atomic Energy Agency)
211B025	Ancheyta, J., et al., "Kinetic Modeling of Hydrocracking of Heavy Oil Fractions: A Review," Catal. Today 109, 1-4 (Nov. 30, 2005), 76-92
211B026	Stanislaus, A., et al., "Investigation of the Mechanism of Sediment Formation in Residual Oil Hydrocracking Process through Characterization of Sediment Deposits," Catal. Today 109, 1-4 (Nov. 30, 2005), 167-77
211B041	Morawski, I., et al., "Effects of Parameters in Ni-Mo Catalyzed Hydrocracking of Vacuum Residue on Composition and Quality of Obtained Products," Fuel Process. Technol. 87, 7 (July, 2006), 659-69
211B051	Speight, J. G., "New Approaches to Hydroprocessing," Catal. Today, 98, 1-2 (Nov. 24, 2004), 55-60
211B054	Kouzu, M., et al., "Catalytic Hydrocracking of Petroleum Residue Over Carbon-Supported Nickel-Molybdenum Sulfides," Energy and Fuels 19, 3 (May, 2005-June 30, 2005), 725-30
211B061	Ancheyta, J., et al., "Hydroprocessing of Heavy Petroleum Feeds: Tutorial," Catal. Today 109, 1-4 (Nov. 30, 2005), 3-15
211B064	Fukuyama, H., et al., "Active Carbon Catalyst for Heavy Oil Upgrading," Catal. Today, 98, 1-2 (Nov. 24, 2004), 207-15
211B065	Rana, M. S., et al., "A Review of Recent Advances on Process Technologies for Upgrading of Heavy Oils and Residua," Fuel 86, 9 SPEC. ISS. (June, 2007), 1216-31
211B068	Fukuyama, H., et al., "Kinetic Study on the Hydrocracking Reaction of Vacuum Residue Using a Lumping Model," Petrol. Sci. Technol. 25, 1-2 (Jan., 2007), 277-87

Accession Number

211B069	Du, H., et al., “The Chemistry of Selective Ring-Opening Catalysts,” Applied Catalysis. A, General: Other Information: Elsevier Ltd. All Rights Reserved, 294, 1 (Oct. 4, 2005), 1-21
211B071	Tailleur, R. G., “Effect of Recycling the Unconverted Residue on a Hydrocracking Catalyst Operating in an Ebullated Bed Reactor,” Fuel Process. Technol. 88, 8 (Aug., 2007), 779-85
211B080	Andreikiv, A. E., et al., “Evaluation of the Residual Service Life of Structural Elements in Hydrogen-Containing Media,” Strength of Materials 38, 3 (May, 2006), 241-47
211B081	N. Ohshio, et al., “Development of Zeolite-Based Catalyst for Resid Hydrocracking,” Fuel 83, 14/15 (Oct. 1, 2004), 1895-98
211B087	Mosio-Mosiewski, J., et al., “Study on Single-Stage Hydrocracking of Vacuum Residue in the Suspension of Ni-Mo Catalyst,” Applied Catalysis A: General 283, 1-2 (Apr. 8, 2005), 147-55
211B089	Begon, V., et al., “Metal-Ion Pillared Clays as Hydrocracking Catalysts (II): Effect of Contact Time on Products From Coal Extracts and Petroleum Distillation Residues,” Fuel 82, 18 (Dec. 1, 2003), 2309-21
211B091	Liu, C. G., et al., “Thermal Hydrocracking Kinetics of Chinese Gudao Vacuum Residue,” Petrol. Sci. Technol. 22, 5-6 (May, 2004-June 30, 2004), 689-708
211B092	Al Hajji, A. A., et al., “Structural Studies on Residual Fuel Oil Asphaltenes by RICO Method,” Petrol. Sci. Technol. 22, 5-6 (May, 2004-June 30, 2004), 631-45
211B096	Hossain, M. M., “Influence of Noble Metals (Rh, Pd, Pt) on Co-Saponite Catalysts for HDS and HC of Heavy Oil,” Chem. Eng. J. 123, 1-2 (Oct. 1, 2006), 15-23
211B101	Marafi, M., et al., “Effect of Diluents in Controlling Sediment Formation During Catalytic Hydrocracking of Kuwait Vacuum Residue,” Petrol. Sci. Technol. 23, 7-8 (Aug., 2005), 899-908
211B104	Matsumura, A., et al., “Hydrocracking Marlim Vacuum Residue with Natural Limonite. Part 2: Experimental Cracking in a Slurry-Type Continuous Reactor,” Fuel 84, 4 (Mar., 2005), 417-21
211B115	Al-Hajji, A. A., et al., “Characterization of Nitrogen and Sulfur Compounds in Hydrocracking Feedstocks by Fourier Transformation Ion Cyclotron Mass Spectrometry,” Oil Gas Sci Tech 63, 1 (2008), 115-28
211B116	Woods, J., et al., “Canadian Crudes: A Comparative Study of SARA Fractions from a Modified HPLC Separation Technique,” Oil Gas Sci Tech 63, 1 (2008), 151-63
211B118	Merdrignac, I., et al., “Physicochemical Characterization of Petroleum Fractions: the State of the Art,” Oil Gas Sci. Tech 62, 1 (2007), 7-32
211B120	Chung, K. H., et al., “Supercritical Fluid Extraction Reveals Resid Properties,” Oil Gas J. 95, 3 (Jan. 20, 1997), 66-69

Accession Number

211B124	Sato, K., et al., “Role of HY Zeolite Mesopores in Hydrocracking of Heavy Oils,” J. Catal. 200, 2 (2001), 288-97
211B125	Hauser, A., et al., “Initial Coke Deposition on Hydrotreating Catalysts. Part II. Structure Elucidation of Initial Coke on Hydrodemetallation Catalysts,” Fuel 84, 2-3 (2005), 259-69
211B132	Decroocq, D., “Major Scientific and Technical Challenges About Developments of New Processes in Refining and Petrochemistry,” Revue De L’Institut Francais Du Petrole (Now Oil & Gas Science and Technology – Rev. IFP) 52, 5 (Sept., 1997-Oct. 31, 1997), 469-89
211B136	Al-Saleh, M. A., et al., “Hydrogen Spillover Effects on Pt-Rh Modified Co-Clay Catalysts for Heavy Oil Upgrading,” Appl. Catal. A Gen. 253, 2 (2003), 453-59
211B138	Callejas, M. A., et al., “Coke Characterisation in Aged Residue Hydrotreating Catalysts by Solid-State 13C-NMR Spectroscopy and Temperature-Programmed Oxidation,” Appl. Catal. A Gen. 218, 1-2 (2001), 181-88
211B139	Martens, G. G., et al., “Kinetics for Hydrocracking Based on Structural Classes: Model Development and Application,” AIChE J. 47, 7 (July, 2001), 1607-22
211B141	Cobalt Development Institute, “2007 Production Statistics,” The Cobalt News (Apr., 2008), 3-4
211B142	InfoMine.com, “Nickel”, (May 2, 2008) Web Page URL www.infomine.com/investment/charts/Dynamic_fChart_cPrice.asp?c=nickel&U=lb…, (May 2, 2008)
211B143	InfoMine.com, “Molybdenum”, (May 2, 2008) Web Page URL www.infomine.com/investment/charts/Dynamic_fChart_cPrice.asp?c=molybeneum…, (May 2, 2008)
211B144	Magyar, M. J., “USGS 2005 Minerals Yearbook. Molybdenum”,(Feb., 2007) Web Page URL http://minerals.usgs.gov/minerals/pubs/commodity/molybdenum/molybmyb05.pdf pp. 51.1-51.11, (Apr. 12, 2007)
211B145	Magyar, M. J., “U.S. Geological Survey, Mineral Commodity Summaries, January 2007. Molybdenum.”, Web Page URL http://minerals.usgs.gov/minerals/pubs/commodity/molybdenum/molybmcs07.pdf p. 110, (Apr. 12, 2007)
211B146	Roskill Metals and Minerals Reports, “Molybdenum”, (2007) Web Page URL www.roskill.com/reports/molybdenum, (Apr. 12, 2007)
211B147	Cobalt Development Institute, “Cobalt Facts. Cobalt Supply and Demand.”, (2006) Web Page URL www.thecdi.com/cobaltfacts.php, (Apr. 12, 2007)

Accession Number

211B148	Primary Metals Inc., "Tungsten Prices", Web Page URL www.primarymetals.ca/s/TungstenPrices.as;?printVersion=now&ReportID=124689
211B150	Energy Information Administration, "Annual Energy Outlook 2007 with Projections to 2030, (Feb., 2007). DOE/EIA-0383(2007).www. eia.doe.gov
211B151	Lewis, M. F., "Bunker Fuels -- Is the End in Sight for Oil's "Sulfur-Sink"?," Mid. East Econ. Survey XLVIII, 25 (June 20, 2005)
211B152	"Fuel Regulations. Diesel Fuel Grade.", (June, 2004) Web Page URL www.dieselnet.com/standards/us/fuel.php, (Apr. 2, 2008)
211B153	Clean Diesel Fuel Alliance Information Center, "Ultra Low Sulfur Diesel Is the Primary Highway Diesel Fuel Produced", Web Page URL www.clean-diesel.org/highway.html, (Apr. 3, 2008)
211B154	Clean Diesel Fuel Alliance Information Center, "Locomotive, Marine and Non-Road Diesel Fuel Standards Begin a Later Dates (Except in California)", Web Page URL www.clean-diesel.org/nonroad.html, (Apr. 2, 2008)
211B155	Chevron Products Company, "Chevron Products Company Exchange Specifications", (2002) Web Page URL chevron.com/products/ourfuels/prodserv/fuels/diesel_west_region.aspx, (Apr. 3, 2008)
211B156	Chevron Global Marketing, "Diesel Fuels Technical Review", (2007) Web Page URL www.chevron.com/products/our fuels/prodserv/fuels/diesel_products.aspx, (Apr. 3, 2008)
211B157	Scheffer, B., et al., "Residue Hydroconversion Processes - New Options," PTQ, 3, 3 (Summer, 1998), 19, 20, 22 , 25, 27, 28
211B158	Egby, C., et al., "Meeting ULSD Challenges," PTQ Catal. 12, 2 (2007), 25-27
211B159	Christolini, B. A., et al., "Maximizing High-Quality Diesel," PTQ Catal. 12, 2 (2007), 33-36, 38-39
211B162	Canes, M., "Policy Issues Will Affect Future US Fuels Markets," Oil Gas J. 105, 39 (Oct. 15, 2007), 56-58, 60
211B163	Koottungal, L., et al., "Clean Fuels Requirements Increase Catalyst Demand," Oil Gas J. 105, 37 (Oct. 1, 2007), 52, 54, 56
211B164	"Catalyst Developments Driven by Clean Fuels Strategies," Oil Gas J. (Oct., 2003),
211B165	"Outlook for 2008," PTQ 13, 1 (2008), 7, 10, 12, 14-19
211B166	MacMillian, J. I. , et al., "2006 Ultra-Low Sulfur Diesel Regulations and the Impact on Fuel Additive Use," in NPRA 2004 Annual Meeting, San Antonio, TX. National Petrochemical & Refiners Association, Washington, DC, (2004), Paper AM-04-24, 20 pp.

Accession Number

211B167	Process Consulting Services, Inc., "Process Notes. Oil Sands Crude – Profits and Problems?," 13, 3 (2008), 14
211B168	Thakkar, V., et al., "Hydrocracking for Heavy Feedstock Conversion," PTQ, 12, 5 (2007), 33-34, 36, 38,40
211B175	Okui, T., et al., "Convert Oil Sands into Distillate Cost-Effectively," Hydrocarbon Proc. (Jan., 2006), 79-81, 84-85
211B176	Plain, C., "Options for Resid Conversion," World Ref. 13, 4 (May, 2003), 30-31, 34-36
211B177	Earnest, N. K., "Prospects for an Expanded Marketplace for Canadian Crude," in NPRA 2007 Annual Meeting, San Francisco, CA. National Petrochemical & Refiners Association, Washington, DC, (2005), Paper AM-05-11, 17 pp.
211B179	Rahimi, P. M., et al., "The Chemistry of Bitumen and Heavy Oil Processing," in Practical Advances in Petroleum Processing, 2, Springer, New York, NY, (2006), 149-86
211B180	Gruia, A., "Recent Advances in Hydrocracking," in Practical Advances in Petroleum Processing, 1, Springer, New York, NY, (2006), 219-55
211B181	Robinson, P. R., et al., "Hydrotreating and Hydrocracking: Fundamentals," in Practical Advances in Petroleum Processing, 1, Springer, New York, NY, (2006), 177-218
211B182	"GE Oil & Gas to Supply New Hydrocracking Facility in the U.K.," Chem. Eng. (N.Y.) www.che.com/print/business_and_economics/latest_news/3635.html
211B183	"Heavy Crude Oil and Bitumen Hydrocracking," PTQ 13, 1 (2008), 139-40
211B184	"PTQ&A," PTQ 13, 1 (2008), 25-26
211B185	Spieler, S., et al., "Upgrading Residuum to Finished Products in Integrated Hydroprocessing Platforms: Solutions and Challenges," in NPRA 2006 Annual Meeting, Salt Lake City, UT. National Petrochemical & Refiners Association, Washington, DC, (2007), Paper AM-06-64, 19 pp.
211B186	Ackelson, D. B., et al., "Innovative Hydrocracking Applications for Conversion of Heavy Feedstocks," in NPRA 2007 Annual Meeting, San Antonio, TX. National Petrochemical & Refiners Association, Washington, DC, (2007), Paper AM-07-47, 27 pp.
211B189	Mukherjee, U., et al., "Solving Clean Fuels Production and Residuum Conversion Through Hydroprocessing Integration," in NPRA 2007 Annual Meeting, San Antonio, TX. National Petrochemical & Refiners Association, Washington, DC, (2007), Paper AM-07-62, 17 pp.

Accession Number

211B190	Wadsworth, D., "LC-Fining Options for Heavy Oil Upgrading," in NPRA 2008 Annual Meeting, San Diego, CA. National Petrochemical & Refiners Association, Washington, DC, (2008), Paper AM-08-33, 29 pp.
211B196	Wisdom, L., et al., "Upgrading Heavy Oil & Bitumen: In the Field or at the Refinery," in NPRA 2008 Annual Meeting, San Diego, CA. National Petrochemical & Refiners Association, Washington, DC, (2008), Paper AM-08-32, 32 pp.
211B197	Koottungal, L., "2007 Worldwide Refining Survey," Oil Gas J. 105, 48 (Dec. 24, 2007),
211B198	Oil Gas Journal, "New Construction Survey," Oil Gas J. (Apr. 7, 2008),
211B199	Jones, D. S. J., "Upgrading the Bottom of the Barrel," in Handbook of Petroleum Processing, Springer, The Netherlands, (2006), 447-81
211B200	Nakamura, D. N., et al., "Special Report: Clean Fuels Requirements Increase Catalyst Demand," Oil Gas J. 105, 37 (Oct. 1, 2007), www.ogj.com/articles/print_screen.cfm?ARTICLE_ID=307637
211B217	Hydrocarbon Processing, "Refining Processes 2006," Hydrocarbon Proc. (2006)
211B234	Callejas, M. A., et al., "Hydrocracking of a Maya Residue. Kinetics and Product Yield Distributions," Industrial and Engineering Chemistry Research 38, 9 (1999), 3285-89
211B283	Zhao, S., et al., "Reactivity of Sulphur Species in Bitumen Pitch and Residua during Fluid Coking and Hydrocracking," Petrol. Sci. Technol. 20, 9 & 10 (2002), 1071-85
211B284	Usui, K., et al., "Catalytic Hydrocracking of Petroleum-Derived Asphaltenes by Transition Metal-Loaded Zeolite Catalysts," Fuel 83 (2004), 1899-1906
211B288	Hydrocarbon Processing, "Refining Processes 2008," Hydrocarbon Proc. 87(9):72 (September 2008)
211B289	Twoler, G. P., et al., "Hydrocracking – Industrial Processes," in Encyclopedia of Catalysis, Vol. 3, Wiley-Interscience, New York, NY, (2003), 541-64
211B292	Speight, J. G., et al. "Petroleum Refining Processes," New York, NY, Marcel Dekker, Inc. (c2002)485-537
211B294	Morel, F., et al., "Residue Hydroconversion," in Petroleum Refining, 3, t Editions TECHNIP, Paris, France, (2001), 409-49
211B295	Raseev, S. "Thermal and Catalytic Processes in Petroleum Refining," New York, NY, Marcel Dekker, Inc. (c2003)681-748
211B296	Klein, M. T., et al., "Mechanistic Kinetic Modeling of Heavy Paraffin Hydrocracking," in Practical Advances in Petroleum Processing, 2, (2006), 187-204

Accession Number

211B298	van Veen, J. A. R., "Hydrocracking," in Zeolites for Cleaner Technologies, Imperial College Press, London, (2002), 131-52
211B299	"PTQ&A," PTQ 12, 4 (2007), 13-14, 16-18, 20, 22
211B300	"PTQ Catalysis Roundtable," PTQ 12, 2 (2007), 11-14, 16, 18, 20-21
211B301	Wright, T. L., "Europe's Catalyst Waste Regulations May Leave Purchasing Officers and Refinery Managers Carrying the Can," World Ref. 12, 8 (June, 2002), 36-41
211B302	Baade, W. F., et al., "Hydrogen," in Kirk-Othmer Encyclopedia of Chemical Technology, 5th ed., Volume 13, Wiley-Interscience, New York, NY, (2005), 794-95
211B303	Parkash, S. "Refining Processes Handbook," New York, NY, Elsevier (c2003)29-108
211B304	Wise, T., "Markets Evolving for Oil Sands, Bitumen, Synthetic Crude," Oil Gas J. 106, 25 (July 7, 2008), 58-63
211B305	International Energy Agency. "Annual Statistical Supplement for 2005 and User's Guide," Oil Market Report. 2006 ed. (Aug. 11, 2006). 79 pp. www.oilmarketreport.org
211B306	Runyan, J., "Is Bottomless-Barrel Refining Possible?," Hydrocarbon Proc. 86, 9 (Sept., 2007), 81-82, 84, 86, 8, 90, 92
211B307	Gembicki, V. A., et al., "Update Processing Operations to Handle Heavy Feedstocks," Hydrocarbon Proc. 86, 2 (Feb., 2007), 41-42, 44-46, 48-50, 52-53
211B308	Zou, R., et al., "Role of Asphaltenes in Petroleum Cracking and Refining," in Asphaltenes and Asphalts, 1, Elsevier Science, New York, NY, (1994), 339-63
211B309	Groenzin, H., et al., "Molecular Size of Asphaltene Solubility Fractions," Energy Fuels 17, 2 (2003), 498-503
211B310	Trejo, F., et al., "Kinetics of Asphaltenes Conversion during Hydrotreating of Maya Crude," Catal. Today 109, 1-4 (2005), 99-103
211B311	Andersen, S. I., et al., "Thermodynamic Models for Asphaltene Solubility and Precipitation," J. Pet. Sci. Eng. 22, 1-3 (1999), 53-66
211B312	Buch, L., et al., "Molecular Size of Asphaltene Fractions Obtained from Residuum Hydrotreatment," Fuel 82, 9 (June, 2003), 1075-84
211B313	Elliott, J. D., "Optimize Coker Operations," Hydrocarbon Proc. 82, 9 (Sept., 2003), 85-86, 88, 90
211B314	Simanzhenkov, V., et al., "Crude Oil Chemistry," , Marcel Dekker, Inc., (2003), 359-96
211B315	Takahashi, T., et al., "Development of a New Hydrodemetallization Catalyst for Deep Desulfurization of Atmospheric Residue and the Effect of Reaction Temperature on Catalyst Deactivation," Catal. Today 104, 1 (June 15, 2005), 76-85

Accession Number

211B316	Merdrignac, I., et al., "Size Exclusion Chromatography: Characterization of Heavy Petroleum Residues. Application to Resid Desulfurization Process," Petrol. Sci. Technol. 22, 7-8 (July, 2004), 1003-22
211B317	Kelly, S. J., et al., "Markets for Canadian Oil Sands Products," in NPRA 2006 Annual Meeting, Salt Lake City, UT. National Petrochemical & Refiners Association, Washington, D.C., (2006), Paper AM-06-28, 24 pp.
211B318	Tojima, M., et al., "Effect of Heavy Asphaltene on Stability of Residual Oil," Catal. Today 43, 3-4 (1998), 347-51
211B319	Gawel, I., et al., "Effect of Asphaltenes on Hydroprocessing of Heavy Oils and Residua," Applied Catalysis A 295, 1 (2005), 89-94
211B320	Sun, M., et al., "First Principles Study of Heavy Oil Organonitrogen Adsorption on NiMoS Hydrotreating Catalysts," Catal. Today 109, 1-4 (2005), 49-53
211B321	Moritis, G., "ERCB Update Expects Bitumen Production Doubling by 2017," Oil Gas J. 106, 25 (July 7, 2008), 51-52, 54-55
211B322	Sword, L., "US Refinery Investments Align With Oil Sands Supplies to 2015," Oil Gas J. 106, 31 (Aug. 18, 2008), 62-65
211B323	Duddy, J., "Residue Hydrocracking and Gasification," 4th Conference on the Upgrading and Refining of Heavy Oil, Bitumen and Synthetic Crude Oil, Edmonton, Alberta Canada. (2006), 26 pp.
211B324	Vautrain, J., "New Regs Require Lower Bunker Fuel Sulfur Levels," Oil Gas J. 106, 44 (Nov. 24, 2008), 46-49
211B325	Shore, J., et al., "Effects of Feed Quality and Product Specifications Changes on Refined Product Supply," in NPRA 2003 Annual Meeting, San Antonio, TX. National Petrochemical & Refiners Association, Washington, D.C., (2003), Paper AM-03-09, 31 pp.
211B326	Energy Information Administration, "Adjusted Sales of Residual Fuel Oil by End Use", (Dec. 5, 2006) Web Page URL http://tonto.eia.doe.gov/dnav/pet/pet_cons_821rsda_nus_a.htm, (Jan. 30, 2007)

Patent Number	
US 2003 0085154	Benazzi, E. et al., (to Institut Francais du Petrole), "Once-Through" Process for Hydrocracking Hydrocarbon-Containing Feeds with High Nitrogen Contents," U.S. Patent Application 2003/0085154 (May 8, 2003)
US 2003 0147791	Ding, F. et al., "Multi-Stage Loop Reactor," U.S. Patent Application 2003/0147791 (Aug. 7, 2003)
US 2005 0077635	Van Hasslet, B. W. et al., (to Shell Oil Company), "Distribution Device," U.S. Patent Application 2005/0077635 (Apr. 14, 2005)
US 2005 0115870	Fukuyama, H. et al., "Hydrocracking Catalyst and Method of Hydrocracking Heavy Oil," U.S. Patent Application 2005/0115870 (June 2, 2005)
US 2005 0129587	Kao, T. et al., (to (Hydrocarbon Technologies)), "Reactor Cup Shell-in-Shell Riser for Reaction Vessel Used in Hydroconversion of Fossil Fuels," U.S. Patent Application 2005/0129587 (June 16, 2005)
US 2005 0129595	Kao, T. et al., (to (Hydrocarbon Technologies)), "Liquid Recycle Inlet Distributor for Reaction Vessel Used in Hydroconversion of Fossil Fuels," U.S. Patent Application 2005/0129595 (June 16, 2005)
US 2005 0169822	Kao, T. et al., (to (Hydrocarbon Technologies)), "Feedstream Inlet Sparger for Reaction Vessel Used in Hydroconversion of Fossil Fuels," U.S. Patent Application 2005/0169822 (Aug. 4, 2005)
US 2005 0233428	Emihgholz, K. F. et al., (to ExxonMobil Research & Engineering Company), "Application of Abnormal Event Detection Technology to Hydrocracking Units," U.S. Patent Application 2007/0233428 (Oct. 4, 2007)
US 2005 0241992	Lott, R. K. et al., "Fixed Bed Hydroprocessing Methods and Systems and Methods for Upgrading an Existing Fixed Bed System," U.S. Patent Application 2005/0241992 (Nov. 3, 2005)
US 2005 0244311	Kao, T. et al., (to (Hydrocarbon Technologies)), "Grid Plate Bubble Cap for Reaction Vessel Used in Hydroconversion of Fossil Fuels," U.S. Patent Application 2005/0244311 (Nov. 3, 205)
US 2006 0079398	Timken, H. K. C. et al., (to Chevron Texaco Corporation), "Highly Homogeneous Amorphous Silica-Alumina Catalyst Composition," U.S. Patent Application 2006/0079398 (Apr. 13, 2006)
US 2006 0272981	Gueret, C. et al., "Process for Converting Heavy Petroleum Fractions Including an Ebullated Bed for Producing Middle Distillates With a Low Sulfur Content," U.S. Patent Application 2006/0272981 (Dec. 7, 2006)
US 2007 0108100	Satchell Jr., D. P., (to The BOC Group, Inc.), "Hydrogen Donor Solvent Production and Use in Resid Hydrocracking Processes," U.S. Patent Application 2007/0108100 (May 17, 2007)
US 2007 0125684	Biemans, M. H. et al., (to Shell Oil Company), "Hydrocracking Catalyst and Process," U.S. Patent Application 2007/0125684 (June 7, 2007)

Patent Number	
US 2007 0131586	de Haan, R. et al., “Non-Sulfided Ni-Based Hydrocracking Catalysts,” U.S. Patent Application 2007/0131586 (June 14, 2007)
US 2007 0131587	Fukuyama, H. et al., (to Toyo Engineering Corporation), “Hydrocracking Catalyst and Method of Hydrocracking Heavy Oil,” U.S. Patent Application 2007/0131587 (June 14, 2007)
US 2007 0138055	Farshid, D. et al., (to Chevron Texaco Corporation), “Process for Upgrading Heavy Oil Using a Highly Active Slurry Catalyst Composition,” U.S. Patent Application 2007/0138055 (June 21, 2007)
US 2007 0138056	Farshid, D. et al., (to Chevron Texaco Corporation), “Process for Upgrading Heavy Oil Using a Reactor with a Novel Reactor Separation System,” U.S. Patent Application 2007/0138056 (June 21, 2007)
US 2007 0138061	Costinel, P., (to Fenoil Inc.), “Method and Apparatus for Introducing Fluids into a Hydrocracking Reactor,” U.S. Patent Application 2005/0138061 (June 21, 2007)
US 2007 0140927	Reynolds, B., (to Chevron Texaco Corporation), “Reactor for Use in Upgrading Heavy Oil Admixed With a Highly Active Catalyst Composition in a Slurry,” U.S. Patent Application 2007/0140927 (June 21, 2007)
US 2007 0158239	Satchell, D. P., (to The BOC Group, Inc.), “Heavy Oil Hydroconversion Process,” U.S. Patent Application 2007/0158239 (July 12, 2007)
US 2007 0215524	Stell, R. C. et al., (to ExxonMobil Chemical Company), “Vapor/Liquid Separation Apparatus for Use in Cracking Hydrocarbon Feedstock Containing Resid,” U.S. Patent Application 2007/0215524 (Sept. 20, 2007)
US 2007 0278135	Tracy, W. J. et al., (to ExxonMobil Research & Engineering Company), “Hydrocracker Post-Treatment Catalyst for Production of Low Sulfur Fuels,” U.S. Patent Application 2007/0278135 (Dec. 6, 2007)
US 5733440	Strangeland, B. E. et al., (to Chevron U.S.A. Inc.), “Catalyst, Method and Apparatus for an on-Stream Particle Replacement System for Countercurrent Contact of a Gas and Liquid Feed Stream With a Packed Bed,” U.S. Patent 5,733,440 (Mar. 31, 1998)
US 5755955	Benham, N. K. et al., (to Petro-Canada), “Hydrocracking of Heavy Hydrocarbon Oils with Conversion Facilitated by Recycle of Polar Aromatics,” U.S. Patent 5,755,955 (May 26, 1998)
US 5871635	Gupta, R. et al., (to Exxon Research and Engineering Company), “Hydroprocessing of Petroleum Fractions with a Dual Catalyst System,” U.S. Patent 5,871,635 (Feb. 16, 1999)
US 5885440	Hoehn, R. K. et al., (to UOP LLC), “Hydrocracking Process With Integrated Effluent Hydrotreating Zone,” U.S. Patent 5,885,440 (Mar. 23, 1999)
US 5888377	Bertram, R. V., (to UOP LLC), “Hydrocracking Process Startup Method,” U.S. Patent 5,888,377 (Mar. 30, 1999)

Patent Number

US 5948721	Yuansheng, L. et al., (to China Petro-Chemical Corporation/ Fushun Research Institute of Petroleum and Petrochemicals, Sinopec), "Dispersing-Type Catalyst for Hydrocracking of Heavy Oil and Residuum, and a Method for the Preparation Thereof," U.S. Patent 5,948,721 (Sept. 7, 1999)
US 5954944	Zhang, Y. et al., (to China Petrochemical Corp. and Research Institute of Petroleum Processing, Sinopec), "Process for Hydrocracking Heavy Distillate Oil under Middle Pressure," U.S. Patent 5,954,944 (Sept. 21, 1999)
US 5954945	Cayton, R. H. et al., (to BP Amoco Corporation), "Fluid Hydrocracking Catalyst Precursor and Method," U.S. Patent 5,954,945 (Sept. 21, 1999)
US 5980729	Kalnes, T. N. et al., (to UOP LLC), "Hydrocracking Process," U.S. Patent 5,980,729 (Nov. 9, 1999)
US 6004453	Benham, N. K. et al., (to Petro-Canada), "Hydrocracking of Heavy Hydrocarbon Oils with Conversion Facilitated by Recycle of Both Heavy Gas Oil and Pitch," U.S. Patent 6,004,453 (Dec. 21, 1999)
US 6004454	Yuansheng, L. et al., (to China Petro-Chemical Corporation/ Fushun Research Institute of Petroleum and Petrochemicals, SINOPEC), "Hydrocracking of Heavy Oil and Residuum with a Dispersing-Type Catalyst," U.S. Patent 6,004,454 (Dec. 21, 1999)
US 6059957	Khan, M. R. et al., (to Texaco Inc.), "Methods for Adding Value to Heavy Oil," U.S. Patent 6,059,957 (May 9, 2000)
US 6068758	Strausz, O. P., (to none), "Process for Hydrocracking Heavy Oil," U.S. Patent 6,068,758 (May 30, 2000)
US 6093309	Seamans, J. D. et al., (to CRI International, Inc.), "Method of Treating Spontaneously Combustible Catalysts," U.S. Patent 6,093,309 (July 25, 2000)
US 6096191	Kalnes, T. N., (to UOP LLC), "Process for Hydrocracking a Hydrocarbonaceous Feedstock," U.S. Patent 6,096,191 (Aug. 1, 2000)
US 6106694	Kalnes, T. N. et al., (to UOP LLC), "Hydrocracking Process," U.S. Patent 6,106,694 (Aug. 22, 2000)
US 6106695	Kalnes, T. N. et al., (to UOP LLC), "Catalytic Hydrocracking Process," U.S. Patent 6,106,695 (Aug. 22, 2000)
US 6174429	George-Marchal, N. et al., (to Institut Francais du Petrole), "Catalyst and Process for Hydrocracking Fractions That Contain Hydrocarbon," U.S. Patent 6,174,429 (Jan. 16, 2001)
US 6190540	Lokhandwala, K. A. et al., (to Membrane Technology and Research, Inc.), "Selective Purging for Hydroprocessing Reactor Loop," U.S. Patent 6,190,540 (Feb. 20, 2001)

Patent Number

US 6200462	Cash, D. R. et al., (to Chevron U.S.A. Inc.), “Process for Reverse Gas Flow in Hydroprocessing Reactor Systems,” U.S. Patent 6,200,462 (Mar. 13, 2001)
US 6242378	Kasztelan Slavik, (to Institut Francais du Petrole), “Process for Sulphurizing Catalysts in the Presence of Carbon and Elemental Sulphur,” U.S. Patent 6,242,378 (June 5, 2001)
US 6258259	Kai, T. et al., (to Asashi Kasei Kabushiki Kaisha), “Iron Sulfide and Process for Producing the Same,” U.S. Patent 6,258,259 (July 10, 2001)
US 6270654	Colyar, J. J. M. J. B. et al., (to IFP North America, Inc.), “Catalytic Hydrogenation Process Utilizing Multi-Stage Ebullated Bed Reactors,” U.S. Patent 6,270,654 (Aug. 7, 2001)
US 6274530	Cayton, R. H. et al., (to BP Corporation North America Inc.), “Fluid Hydrocracking Catalyst Precursor and Method,” U.S. Patent 6,274,530 (Aug. 14, 2001)
US 6280606	Morel, F. et al., (to Institut Francais du Petrole), “Process for Converting Heavy Petroleum Fractions That Comprise a Distillation Stage, Ebullated-Bed Hydroconversion Stages of the Vacuum Distillate, and a Vacuum Residue and a Catalytic Cracking Stage,” U.S. Patent 6,280,606 (Aug. 28, 2001)
US 6291391	MacArthur, J. B., (to IFP North America, Inc.), “Method for Presulfiding and Preconditioning of Residuum Hydroconversion Catalyst,” U.S. Patent 6,291,391 (Sept. 18, 2001)
US 6299759	Bradway, R. A. et al., (to Mobil Oil Corporation), “Hydroprocessing Reactor and Process With Gas and Liquid Quench,” U.S. Patent 6,299,759 (Oct. 9, 2001)
US 6316382	Kasztelan Slavik, (to Institut Francais du Petrole), “Process for Sulphurizing Catalysts by Reduction Followed by Sulphurization,” U.S. Patent 6,316,382 (Nov. 13, 2001)
US 6379532	Hoehn, R. K. et al., (to UOP LLC), “Hydrocracking Process,” U.S. Patent 6,379,532 (Apr. 30, 2002)
US 6379535	Hoehn, R. K. et al., (to UOP LLC), “Hydrocracking Process,” U.S. Patent 6,379,535 (Apr. 30, 2002)
US 6387245	Kalnes, T. N. et al., (to UOP LLC), “Hydrocracking Process,” U.S. Patent 6,387,245 (May 14, 2002)
US 6402935	Kalnes, T. N., (to UOP LLC), “Hydrocracking Process,” U.S. Patent 6,402,935 (June 11, 2002)
US 6451197	Kalnes, T. N., (to UOP LLC), “Process for Hydrocracking a Hydrocarbonaceous Feedstock,” U.S. Patent 6,451,197 (Sept. 17, 2002)
US 6517706	Pruden, B. B. et al., (to Petro-Canada), “Hydrocracking of Heavy Hydrocarbon Oils With Improved Gas and Liquid Distribution,” U.S. Patent 6,517,706 (Feb. 11, 2003)

Patent Number

US 6596155	Gates, D. B. et al., (to UOP LLC), “Hydrocracking Process,” U.S. Patent 6,596,155 (July 22, 2003)
US 6660157	Que, G. et al., (to PetroChina Company Ltd. And University of Petroleum), “Heavy Oil Hydrocracking Process With Multimetallic Liquid Catalyst in Slurry Bed,” U.S. Patent 6,660,157 (Dec. 9, 2003)
US 6667267	Benazzi, E. et al., (to Institut Francais du Petrole), “Hydrocracking Processing Using a Catalyst Comprising an IM-5 Zeolite and a Catalyst Comprising an IM-5 Zeolite and a Promoter Element,” U.S. Patent 6,667,267 (Dec. 23, 2003)
US 6670295	Wang, F. et al., (to China Petroleum & Chemical Corporation, Fushun Research Institute of Petroleum & Petrochemicals Sinopec Corp.), “Highly Active Midbarrel Hydrocracking Catalyst and the Preparation Thereof,” U.S. Patent 6,670,295 (Dec. 30, 2003)
US 6726833	Han, B. et al., (to China Petroleum & Chemical Corporation and Fushun Research Institute of Petroleum & Petrochemicals, SINOPEC Corporation), “Process for Hydroconverting a Heavy Hydrocarbon Chargestock,” U.S. Patent 6,726,833 (Apr. 27, 2004)
US 6740226	Mehra, Y. R. et al., (to Saudi Arabian Oil Company), “Process for Increasing Hydrogen Partial Pressure in Hydroprocessing Processes,” U.S. Patent 6,740,226 (May 25, 2004)
US 6797153	Fukuyama, H. et al., (to Petroleum Energy Center, Toyo Engineering Corporation), “Catalyst for Hydrocracking of Heavy Oils and Method of Hydrocracking Heavy Oils,” U.S. Patent 6,797,153 (Sept. 28, 2004)
US 6858128	Hoehn, R. K. et al., (to UOP LLC), “Hydrocracking Process,” U.S. patent 6,858,128 (Feb. 22, 2005)
US 6887369	Moulton, D. S. et al., (to Southwest Research Institute), “Pretreatment Processes for Heavy Oil and Carbonaceous Materials,” U.S. patent 6,887,369 (May 3, 2005)
US 6902664	Timken, H. K. C., (to Chevron U.S.A. Inc.), “Extremely Low Acidity USY and Homogeneous, Amorphous Silica-Alumina Hydrocracking Catalyst and Process,” U.S. Patent 6,902,664 (June 7, 2005)
US 6960325	Kao, T. et al., (to Hydrocarbon Technologies), “Apparatus for Hydrocracking and/or Hydrogenating Fossil Fuels,” U.S. Patent 6,960,325 (Nov. 1, 2005)
US 7005057	Kalnes, T. N., (to UOP LLC), “Hydrocracking Process for the Production of Ultra Low Sulfur Diesel,” U.S. Patent 7,005,057 (Feb. 28, 2006)
US 7041211	Kalnes, T. N., (to UOP LLC), “Hydrocracking Process,” U.S. Patent 7,041,211 (May 9, 2006)
US 7074321	Kalnes, T. N., (to UOP LLC), “Combination Hydrocracking Process for the Production of Low Sulfur Motor Fuels,” U.S. Patent 7,074,321 (July 11, 2006)

Patent Number

US 7087153	Kalnes, T. N., (to UOP LLC), "Combination Hydrocracking Process for the Production of Ultra Low Sulfur Diesel," U.S. Patent 7,087,153 (Aug. 8, 2006)
US 7097760	Kalnes, T. N. et al., (to UOP LLC), "Hydrocarbon Process for the Production of Ultra Low Sulfur Diesel," U.S. Patent 7,097,760 (Aug. 29, 2006)
US 7156977	Wrisberg, J. et al., (to Haldor Topsoe A/S), "Hydroprocessing Process and Method of Retrofitting Existing Hydroprocessing Reactors," U.S. Patent 7,156,977 (Jan. 2, 2007)
US 7192900	Creyghton, E. J. et al., (to Shell Oil Company), "Hydrocracking Catalyst," U.S. Patent 7,192,900 (Mar. 20, 2007)
US 7270738	Euzen, P. et al., (to Institut Francais du Petrole), "Catalyst and Process for Hydrocracking Hydrocarbon-Containing Feedstocks," U.S. Patent 7,270,738 (Sept. 18, 2007)
US 7279090	Colyar, J. J. et al., (to Institut Francais du Petrole), "Integrated SDA and Ebullated-Bed Process," U.S. Patent 7,279,090 (Oct. 9, 2007)
US 7300900	Benazzi, E. et al., (to Institut Francais du Petrole), "Catalyst Comprising at Least One Zeolite Chosen From ZBM-30, SM-48, EU-2 and EU-11 and at Least One Y Zeolite and Process of Hydroconversion of Hydrocarbon Charges Using Such a Catalyst," U.S. Patent 7,300,900 (Nov. 27, 2007)

PEP PUBLICATIONS

Reports

145	"Battery Limits Cost Estimating," PEP Report 145, SRI Consulting, Menlo Park, CA (April 1982)
162	"Computer Program for Estimating Plant Investment," PEP Report 162, SRI Consulting, Menlo Park, CA (March 1985)
195A	Nielsen, Richard H. "Advances in Fluid Catalytic Cracking," PEP Report 195A, SRI Consulting, Menlo Park, CA (2005)
214	Hale, Anthony E. "Hydrotreating," PEP Report 214, SRI Consulting, Menlo Park, CA (September 1996)
214A	Nielsen, Richard H. "Heavy Oil Hydrotreating," PEP Report 214A, SRI Consulting, Menlo Park, CA (December 2007)
216	Ma, James L. "Acid Gas Treatment and Sulfur Recovery," PEP Report 216, SRI Consulting, Menlo Park, CA (1997)
228	Nielsen, Richard H. "Refinery Residue Upgrading," PEP Report 228, SRI Consulting, Menlo Park, CA (May 2000)
230	Ma, James L. "Sulfur Removal from Petroleum Fuels," PEP Report 230, SRI Consulting, Menlo Park, CA (October 2000)
246	Nielsen, Richard H. "Near Zero Sulfur Diesel Fuel," PEP Report 246, SRI Consulting, Menlo Park, CA (2002)
251A	Bray, Ronald G. "Advances in Biodiesel and Renewable Diesel Production," PEP Report 251A, SRI Consulting, Menlo Park, CA (December 2007)
266	Pavone, Anthony. "Heavy Oil from Tar Sands," PEP Report 266, SRI Consulting, Menlo Park, CA (December 2008)

Review

99-2	Nielsen, Richard H. "ENI Slurry hydroprocessing Technology for Diesel Fuel," PEP Review 99-2, SRI Consulting, Menlo Park, CA (June 2003)

Yearbook

PEP Yearbook	Lacson, Jamie, ed. "PEP Yearbook International, 2007," SRI Consulting, Menlo Park, CA (2007)

Appendix D

PATENT REFERENCES BY COMPANY

Patent Assignees

Assignee	Patent Number
	2003/0147791
	2005/0115870
	2005/0241992
	2006/0272981
	2007/0131586
	6,068,758
Asashi Kasei Kabushiki Kaisha	6,258,259
BP Amoco Corporation	5,954,945
BP Corporation North America Inc.	6,274,530
Chevron Texaco Corporation	2006/0079398
	2007/0138055
	2007/0138056
	2007/0140927
Chevron U.S.A. Inc.	5,733,440
	6,200,462
	6,902,664
China Petro-Chemical Corporation/ Fushun Research Institiute of Petroleum and Petrochemicals, Sinopec	5,948,721
	6,004,454
	5,954,944

Assignee	Patent Number
China Petroleum & Chemical Corporation and Fushun Research Institute of Petroleum & Petrochemicals, SINOPEC Corporation	6,726,833
	6,670,295
CRI International, Inc.	6,093,309
Exxon Research and Engineering Company	5,871,635
ExxonMobil Chemical Company	2007/0215524
ExxonMobil Research & Engineering Company	2007/0233428
	2007/0278135
Fenoil Inc.	2005/0138061
Haldor Topsoe A/S	7,156,977
Hydrocarbon Technologies	2005/0129587
	2005/0129595
	2005/0169822
	2005/0244311
	6,960,325
IFP North America, Inc.	6,270,654
	6,291,391
Institut Francais du Pe'trole	7,279,090
	2003/0085154
	6,174,429
	6,242,378
	6,280,606

Assignee	Patent Number
Institut Francais du Petrole (Concluded)	6,316,382
	6,667,267
	7,270,738
	7,300,900
Membrane Technology and Research, Inc.	6,190,540
Mobil Oil Corporation	6,299,759
Petro-Canada	5,755,955
	6,004,453
	6,517,706
PetroChina Company Ltd. and University of Petroleum	6,660,157
Petroleum Energy Center, Toyo Engineering Corporation	6,797,153
Saudi Arabian Oil Company	6,740,226
Shell Oil Company	2005/0077635
	2007/0125684
	7,192,900
Southwest Research Institute	6,887,369
Texaco Inc.	6,059,957
The BOC Group, Inc.	2007/0108100
	2007/0158239
Toyo Engineering Corporation	2007/0131587

Assignee	Patent Number
UOP LLC	5,885,440
	5,888,377
	5,980,729
	6,096,191
	6,106,694
	6,106,695
	6,379,532
	6,379,535
	6,387,245
	6,402,935
	6,451,197
	6,596,155
	6,858,128
	7,005,057
	7,041,211
	7,074,321
	7,087,153
	7,097,760

Appendix E

PROCESS FLOW DIAGRAM

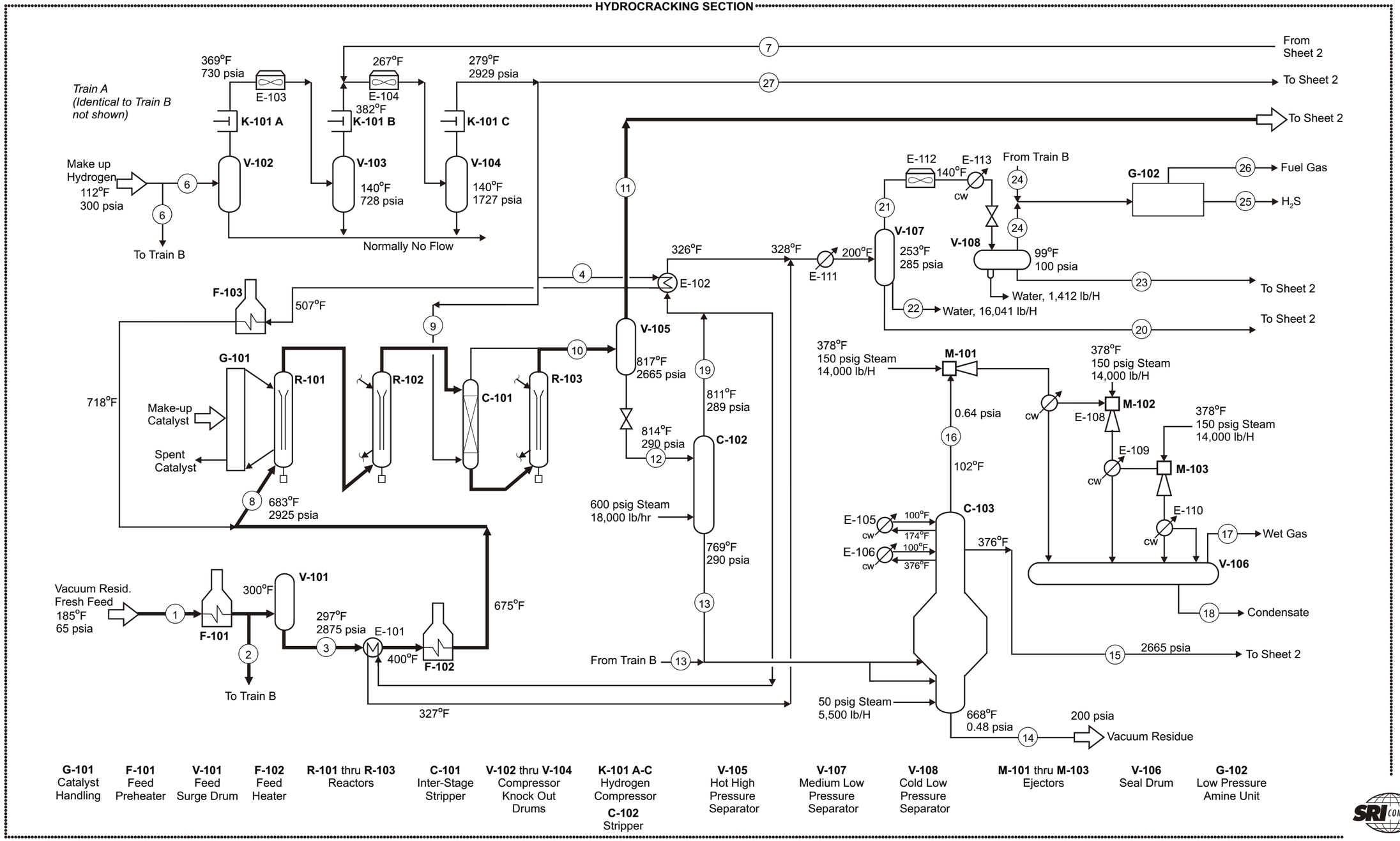
HYDROCRACKING SECTION
From Sheet 2
To Sheet 2
To Sheet 2
Train A
(Identical to Train B
not shown)
369°F
730 psia
E-103
K-101 A
V-102
267°F
E-104
382°F
K-101 B
V-103
140°F
728 psia
279°F
2929 psia
K-101 C
V-104
140°F
1727 psia
Make up
Hydrogen
112°F
300 psia
To Train B
Normally No Flow
F-103
507°F
G-101
R-101
R-102
C-101
R-103
718°F
Make-up
Catalyst
Spent
Catalyst
683°F
2925 psia
Vacuum Resid.
Fresh Feed
185°F
65 psia
F-101
300°F
V-101
To Train B
297°F
2875 psia
E-101
400°F
F-102
675°F
327°F
326°F
E-102
V-105
817°F
2665 psia
814°F
290 psia
811°F
289 psia
C-102
600 psig Steam
18,000 lb/hr
769°F
290 psia
From Train B
328°F
E-111
200°F
E-112
E-113
140°F
cw
From Train B
V-107
253°F
285 psia
V-108
99°F
100 psia
Water, 1,412 lb/H
Water, 16,041 lb/H
G-102
Fuel Gas
H_2S
To Sheet 2
To Sheet 2
378°F
150 psig Steam
14,000 lb/H
M-101
0.64 psia
102°F
C-103
E-105
100°F
174°F
E-106
100°F
376°F
376°F
50 psig Steam
5,500 lb/H
668°F
0.48 psia
200 psia
Vacuum Residue
378°F
150 psig Steam
14,000 lb/H
M-102
E-108
E-109
M-103
E-110
Wet Gas
V-106
Condensate
2665 psia
To Sheet 2
G-101 Catalyst Handling
F-101 Feed Preheater
V-101 Feed Surge Drum
F-102 Feed Heater
R-101 thru R-103 Reactors
C-101 Inter-Stage Stripper
V-102 thru V-104 Compressor Knock Out Drums
K-101 A-C Hydrogen Compressor
C-102 Stripper
V-105 Hot High Pressure Separator
V-107 Medium Low Pressure Separator
V-108 Cold Low Pressure Separator
M-101 thru M-103 Ejectors
V-106 Seal Drum
G-102 Low Pressure Amine Unit

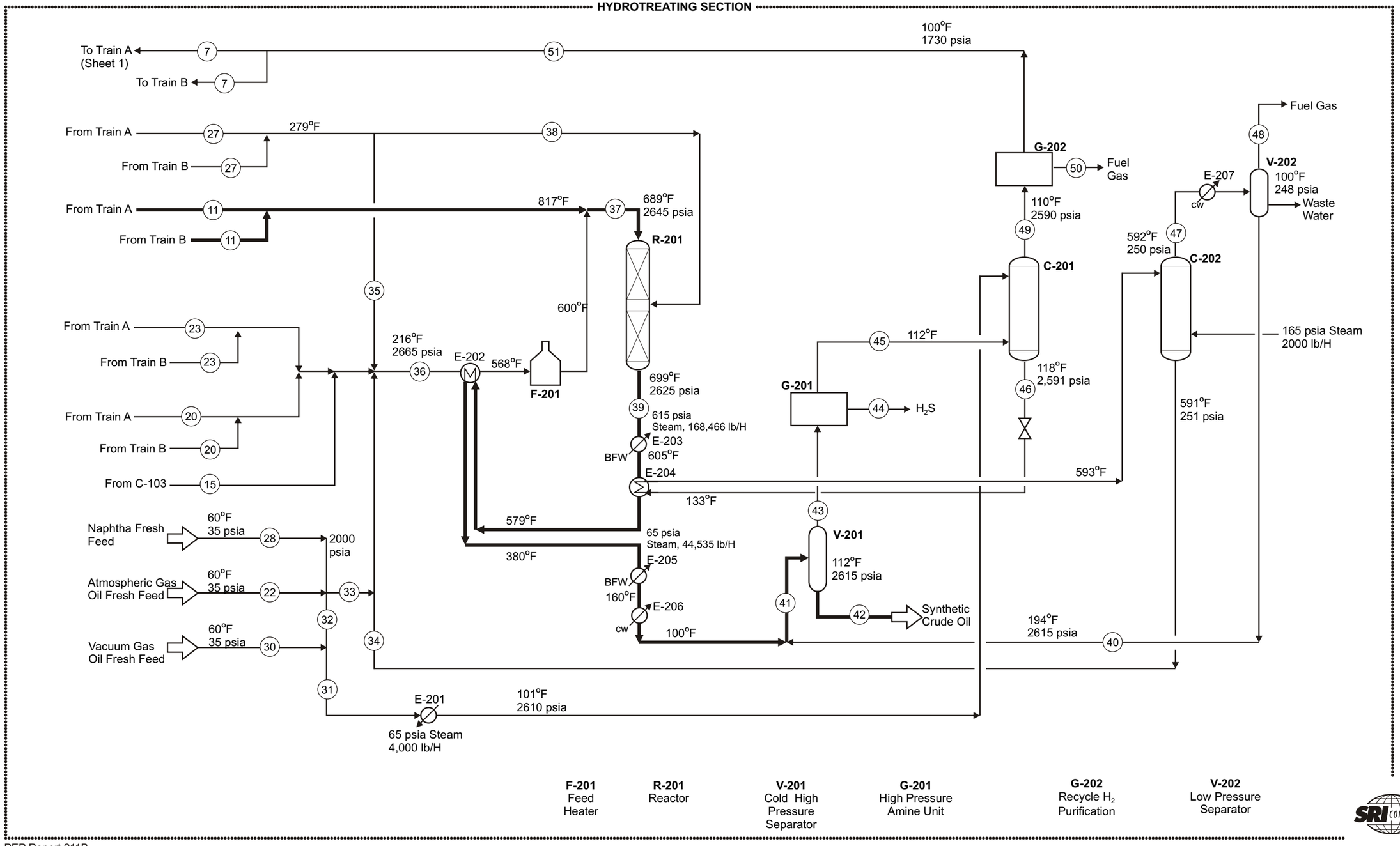
HYDROTREATING SECTION
To Train A (Sheet 1)
To Train B
From Train A
From Train B
From C-103
Naphtha Fresh Feed
Atmospheric Gas Oil Fresh Feed
Vacuum Gas Oil Fresh Feed
60°F 35 psia
2000 psia
279°F
817°F
689°F 2645 psia
R-201
600°F
216°F 2665 psia
E-202
568°F
F-201
699°F 2625 psia
615 psia Steam, 168,466 lb/H
E-203
605°F
BFW
E-204
133°F
579°F
65 psia Steam, 44,535 lb/H
380°F
E-205
160°F
E-206
cw
100°F
E-201
65 psia Steam 4,000 lb/H
101°F 2610 psia
100°F 1730 psia
G-202
Fuel Gas
110°F 2590 psia
C-201
118°F 2,591 psia
G-201
H2S
112°F
593°F
V-201
112°F 2615 psia
Synthetic Crude Oil
194°F 2615 psia
E-207
592°F 250 psia
C-202
591°F 251 psia
V-202
100°F 248 psia
Waste Water
165 psia Steam 2000 lb/H
F-201 Feed Heater
R-201 Reactor
V-201 Cold High Pressure Separator
G-201 High Pressure Amine Unit
G-202 Recycle H2 Purification
V-202 Low Pressure Separator

Figure 8.1 (Sheet 1 of 2)

ATMOSPHERIC RESIDUE HYDROCRACKING BY SLURRY PROCESS

SECTION 100: HYDROCRACKING

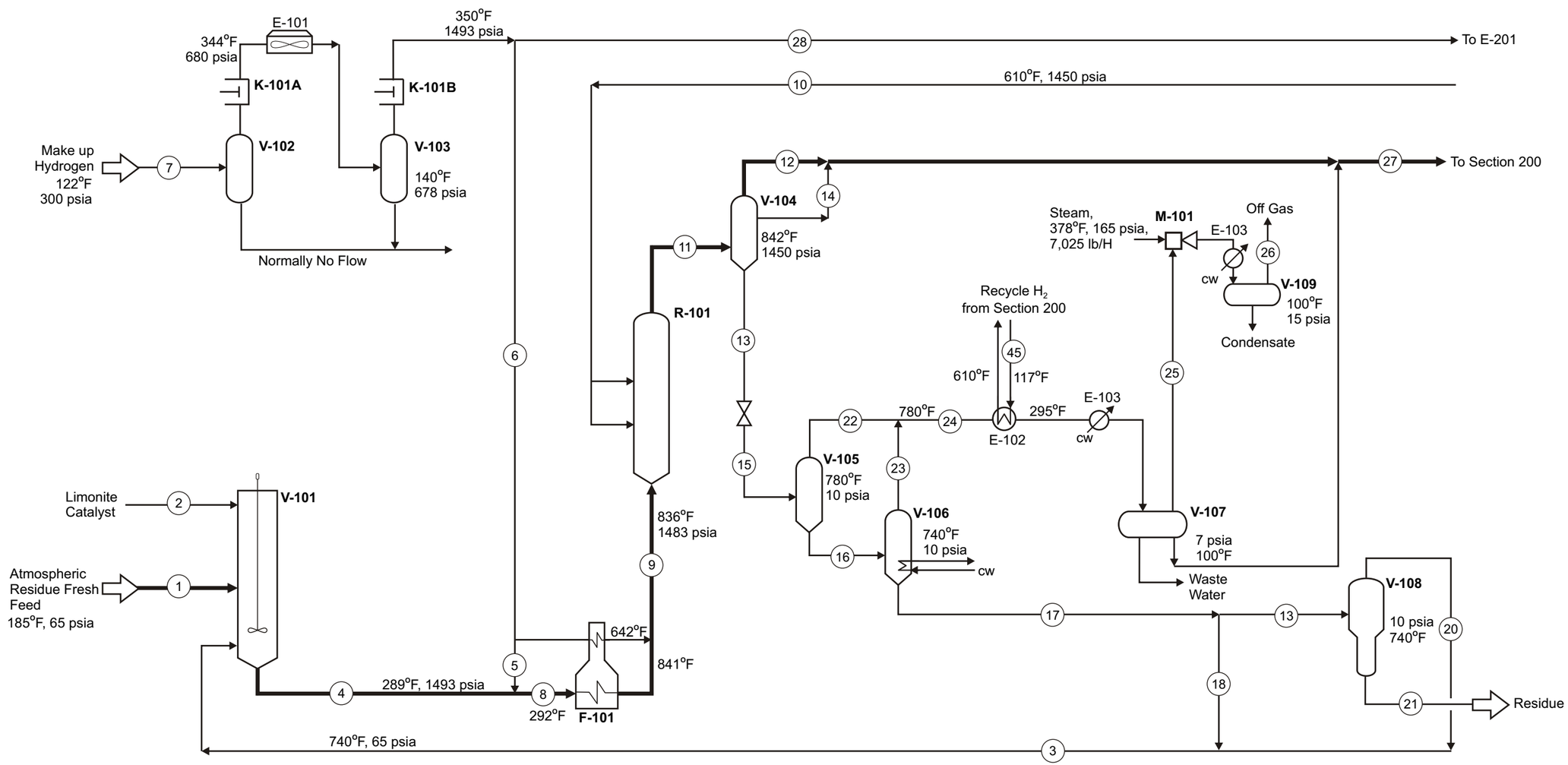

V-101 Catalyst Fresh Feed Mixer	**V-102 & V-103** Compressor Knock Out Drums	**K-101A & K-101B** Hydrogen Compressor	**F-101** Feed Heater	**R-101** Slurry Reactor	**V-104** Hot High Pressure Separator	**V-105 & V-106** Hot Vacuum Separators	**V-107** Cold Vacuum Separators	**V-109** Seal Drum	**V-108** Toluene Insolubles Removal

SECTION 200: HYDROTREATING

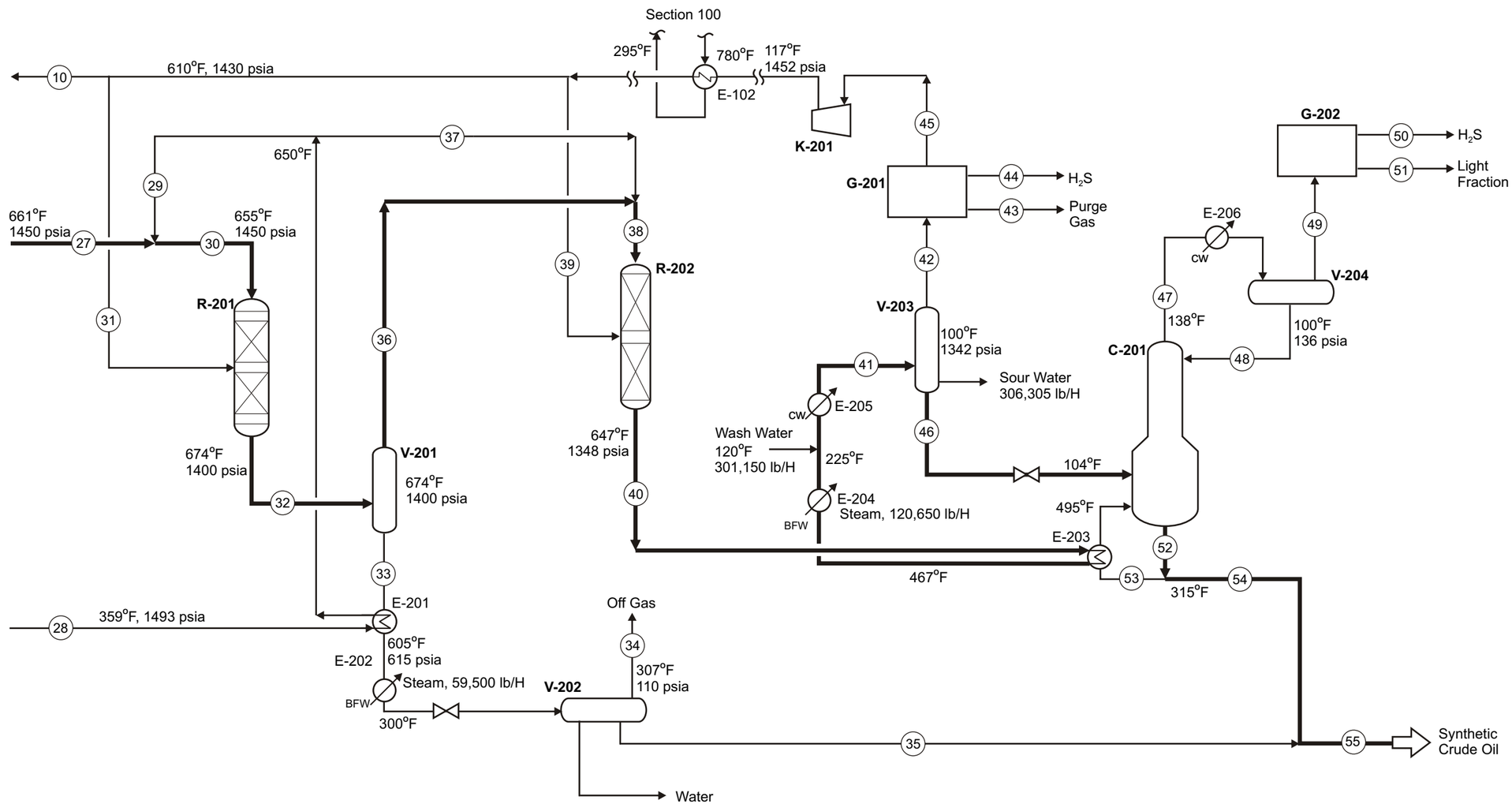

R-201 Stage 1 Reactor	**V-201** Stage 1 High Pressure Hot Separator	**V-202** Stage 1 Low Pressure Cold Separator	**R-202** Stage 2 Reactor	**V-203** Stage 2 High Pressure Cold Separator	**G-201** Off Gas Amine Unit	**K-201** Recycle H_2 Compressor	**C-201** Fractionator	**V-204** Fractionator Receiver