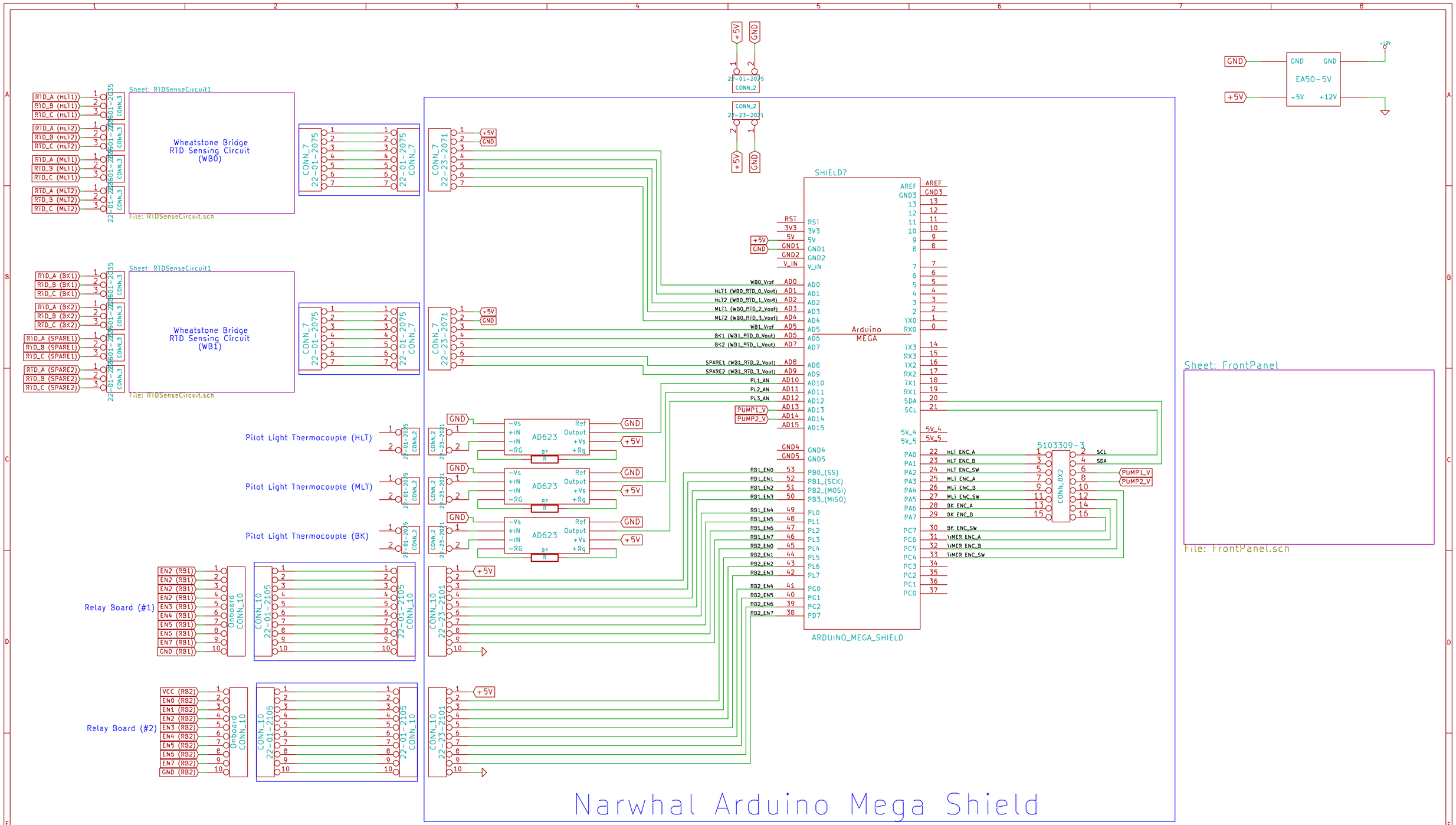

File: Project_Narwhal_Electrical.sch
Sheet: /
Title: noname.sch
Size: USLedger Date: 11 oct 2015 | **Rev:**
KiCad E.D.A. eeschema (2013-07-07 BZR 4022)-stable | Id: 1/4

Front Panel Connection Board

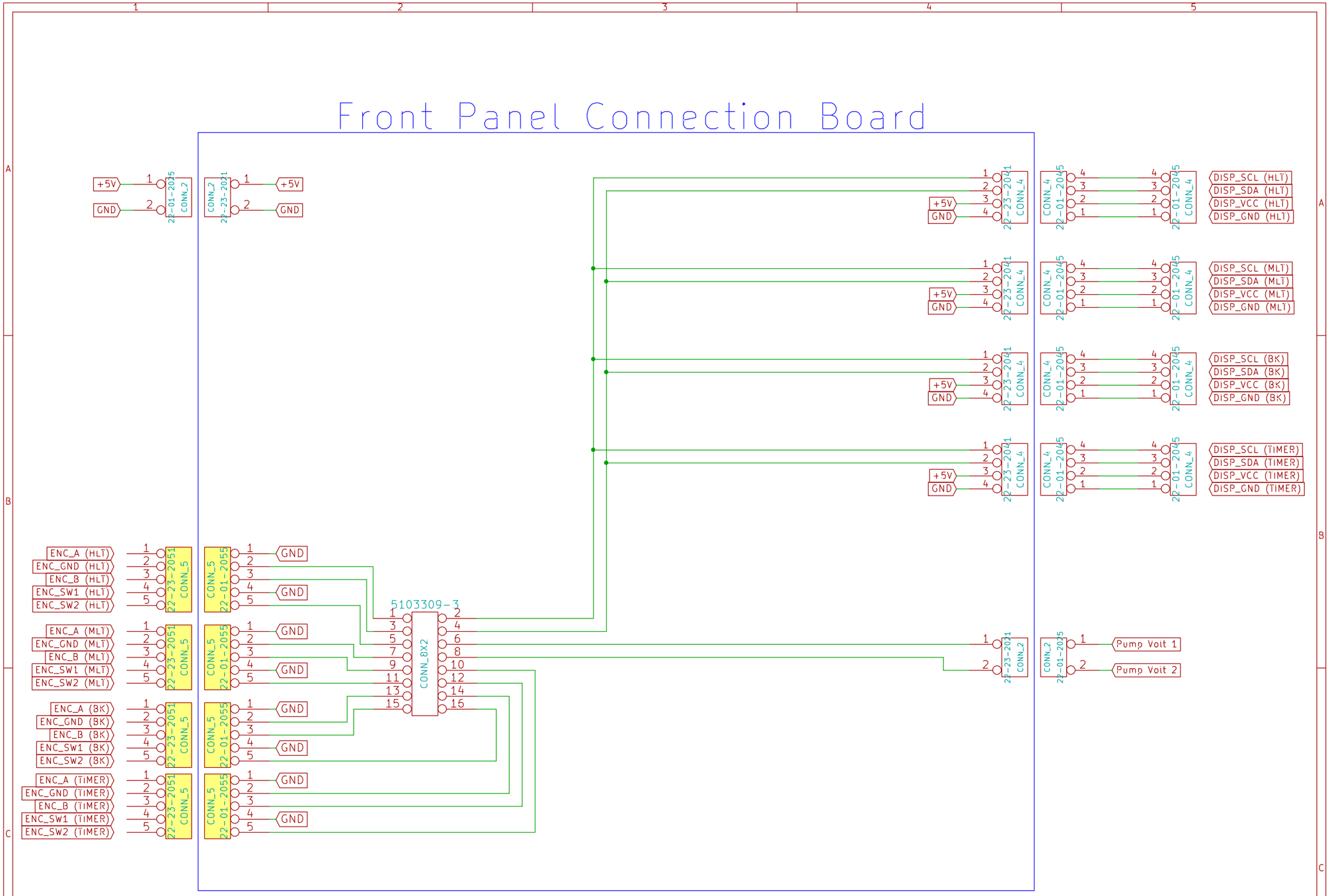

File: FrontPanel.sch	
Sheet: /FrontPanel/	
Title: noname.sch	
Size: USLetter Date: 11 oct 2015	**Rev:**
KiCad E.D.A. eeschema (2013-07-07 BZR 4022)-stable	Id: 2/4

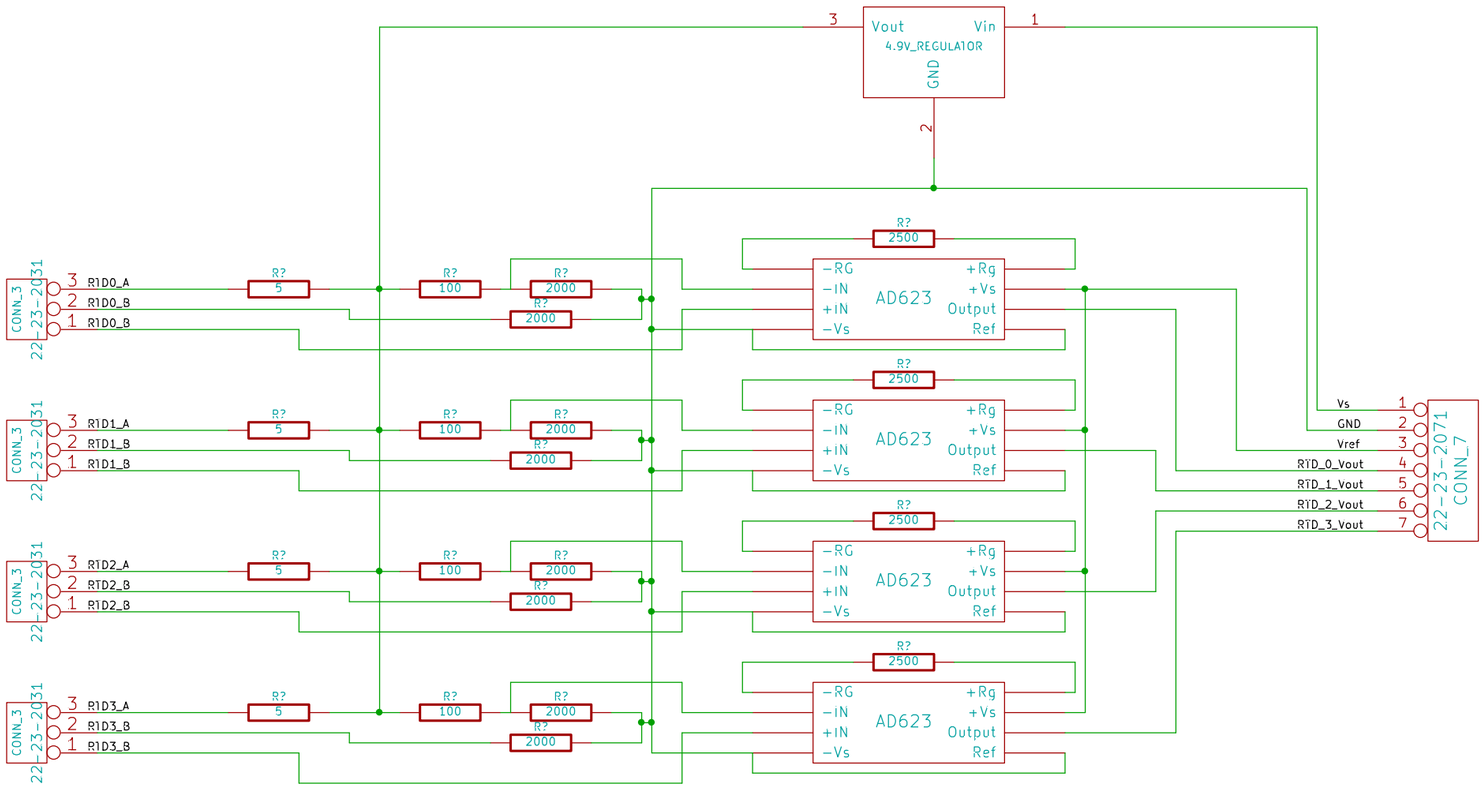

File: RTDSenseCircuit.sch		
Sheet: /RTDSenseCircuit1/		
Title:		
Size: A4	Date: 11 oct 2015	**Rev:**
KiCad E.D.A. eeschema (2013-07-07 BZR 4022)-stable		Id: 3/4

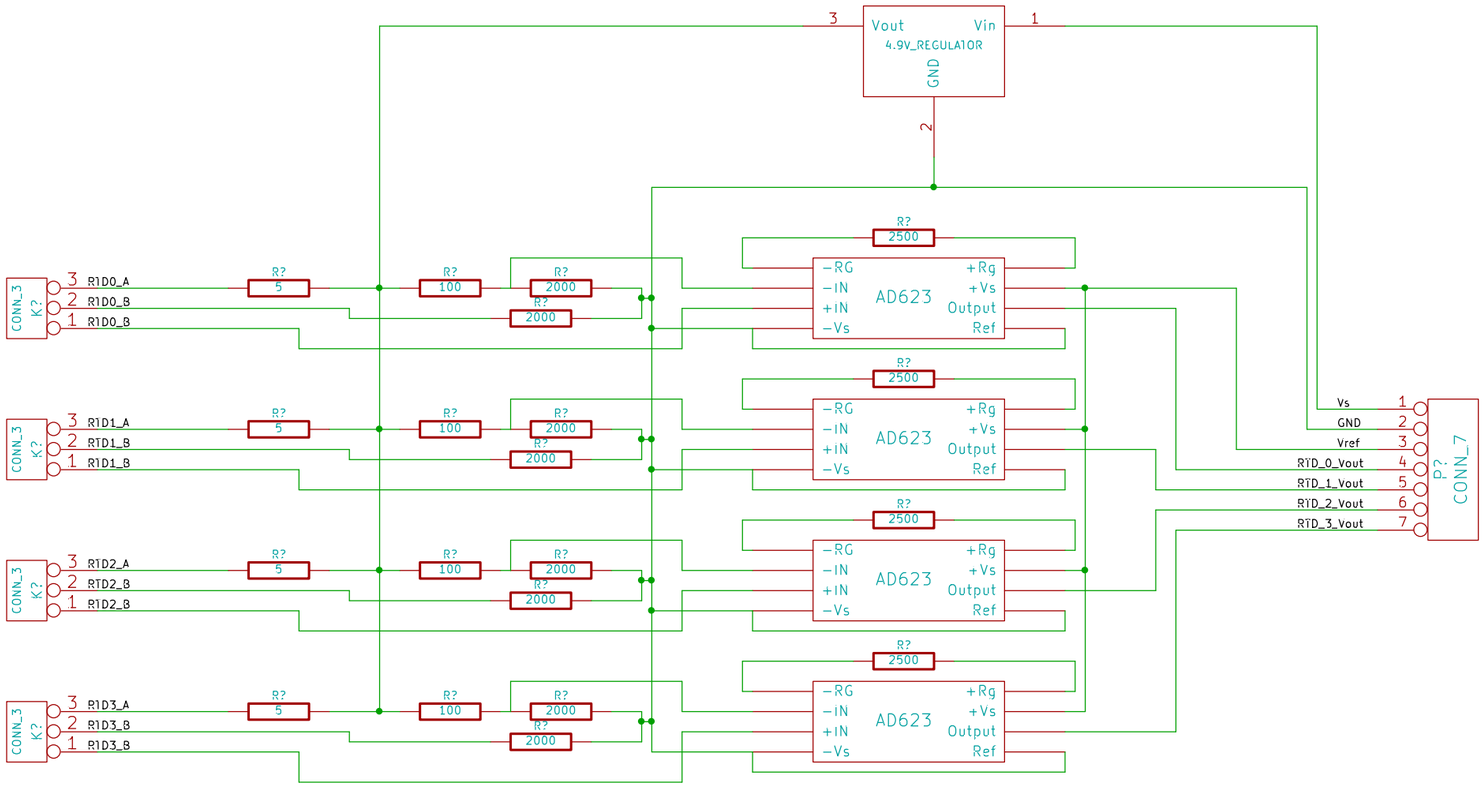

File: RTDSenseCircuit.sch		
Sheet: /RTDSenseCircuit1/		
Title:		
Size: A4	Date: 11 oct 2015	**Rev:**
KiCad E.D.A. eeschema (2013-07-07 BZR 4022)-stable		Id: 4/4