EE 044252: Digital Systems and Computer Structure
Spring 2018

Lecture 10: RISC-V Single Cycle

EE 044252: Digital Systems and Computer Structure

Topic	wk	Lectures	Tutorials	Workshop	Simulation
Arch	1	Intro. RISC-V architecture	Numbers. Codes		
Comb	2	Switching algebra & functions	Assembly programming		
	3	Combinational logic	Logic minimization	Combinational	
	4	Arithmetic. Memory	Gates		Combinational
Seq	5	Finite state machines	Logic		
	6	Sync FSM	Flip flops, FSM timing	Sequential	Sequential
	7	FSM equiv, scan, pipeline	FSM synthesis		
	8	Serial comm, RISC-V functions	Serial comm, pipeline		
µArch	9	RISC-V instruction formats	Function call		
	10	RISC-V single cycle	Single cycle RISC-V		Multi-cycle
	11	Multi-cycle RISC-V	Multi-cycle RISC-V		
	12	Interrupts, pipeline RISC-V	Microcode, interrupts		
	13	Dependencies in pipeline RISC-V	Depend. in pipeline RISC-V		

Agenda

- Single-Cycle RISC-V Datapath
- Controller
- Instruction Timing
- Performance Measures

Recap: Complete RV32I ISA

imm[31:12]				rd	0110111	LUI
imm[31:12]				rd	0010111	AUIPC
imm[20|10:1|11|19:12]				rd	1101111	JAL
imm[11:0]		rs1	000	rd	1100111	JALR
imm[12|10:5]	rs2	rs1	000	imm[4:1|11]	1100011	BEQ
imm[12|10:5]	rs2	rs1	001	imm[4:1|11]	1100011	BNE
imm[12|10:5]	rs2	rs1	100	imm[4:1|11]	1100011	BLT
imm[12|10:5]	rs2	rs1	101	imm[4:1|11]	1100011	BGE
imm[12|10:5]	rs2	rs1	110	imm[4:1|11]	1100011	BLTU
imm[12|10:5]	rs2	rs1	111	imm[4:1|11]	1100011	BGEU
imm[11:0]		rs1	000	rd	0000011	LB
imm[11:0]		rs1	001	rd	0000011	LH
imm[11:0]		rs1	010	rd	0000011	LW
imm[11:0]		rs1	100	rd	0000011	LBU
imm[11:0]		rs1	101	rd	0000011	LHU
imm[11:5]	rs2	rs1	000	imm[4:0]	0100011	SB
imm[11:5]	rs2	rs1	001	imm[4:0]	0100011	SH
imm[11:5]	rs2	rs1	010	imm[4:0]	0100011	SW
imm[11:0]		rs1	000	rd	0010011	ADDI
imm[11:0]		rs1	010	rd	0010011	SLTI
imm[11:0]		rs1	011	rd	0010011	SLTIU
imm[11:0]		rs1	100	rd	0010011	XORI
imm[11:0]		rs1	110	rd	0010011	ORI
imm[11:0]		rs1	111	rd	0010011	ANDI

0000000	shamt	rs1	001	rd	0010011	SLLI
0000000	shamt	rs1	101	rd	0010011	SRLI
0100000	shamt	rs1	101	rd	0010011	SRAI
0000000	rs2	rs1	000	rd	0110011	ADD
0100000	rs2	rs1	000	rd	0110011	SUB
0000000	rs2	rs1	001	rd	0110011	SLL
0000000	rs2	rs1	010	rd	0110011	SLT
0000000	rs2	rs1	011	rd	0110011	SLTU
0000000	rs2	rs1	100	rd	0110011	XOR
0000000	rs2	rs1	101	rd	0110011	SRL
0100000	rs2	rs1	101	rd	0110011	SRA
0000000	rs2	rs1	110	rd	0110011	OR
0000000	rs2	rs1	111	rd	0110011	AND
0000	pred	succ	00000	000	00000	0001111	FENCE
0000	0000	0000	00000	001	00000	0001111	FENCE.I
000000000000			00000	000	00000	1110011	ECALL
000000000001			00000	000	00000	1110011	EBREAK
csr			rs1	001	rd	1110011	CSRRW
csr			rs1	010	rd	1110011	CSRRS
csr			rs1	011	rd	1110011	CSRRC
csr			zimm	101	rd	1110011	CSRRWI
csr			zimm	110	rd	1110011	CSRRSI
csr			zimm	111	rd	1110011	CSRRCI

Not in 044252

State Required by RV32I ISA

Each instruction reads and updates this state during execution:

- Registers (**`x0..x31`**)
  - Register file (or *regfile*) **`Reg`** holds 32 registers x 32 bits/register: **`Reg[0].. Reg[31]`**
  - First register read specified by *rs1* field in instruction
  - Second register read specified by *rs2* field in instruction
  - Write register (destination) specified by *rd* field in instruction
  - **`x0`** is always 0 (writes to **`Reg[0]`** are ignored)
- Program Counter (**`PC`**)
  - Holds address of current instruction
- Memory (**`MEM`**)
  - Holds both instructions & data, in one 32-bit byte-addressed memory space
  - We'll use separate memories for instructions (**`IMEM`**) and data (**`DMEM`**)
    - *Later we'll replace these with instruction and data caches*
  - Instructions are read (*fetched*) from instruction memory (assume **`IMEM`** read-only)
  - Load/store instructions access data memory

One-Instruction-Per-Cycle RISC-V Machine

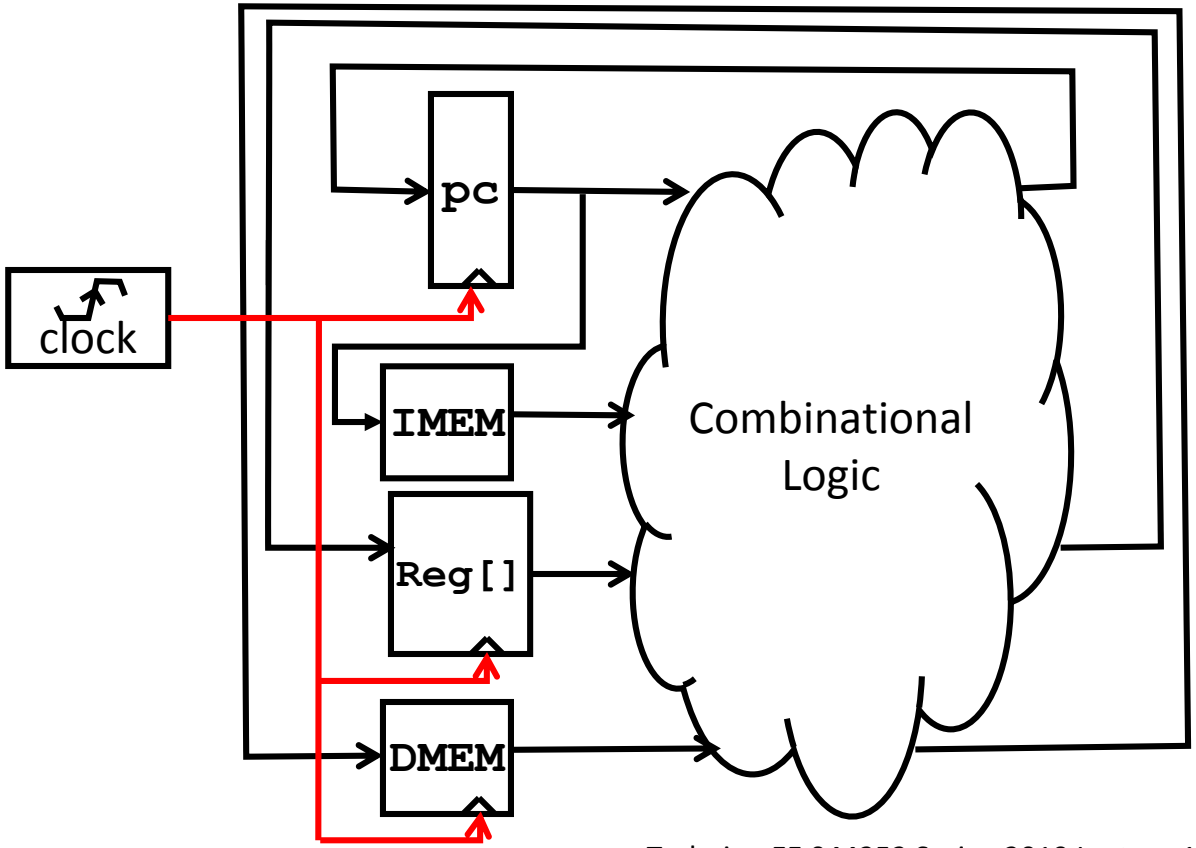

- On every tick of the clock, the computer executes one instruction
- Current state outputs drive the inputs to the combinational logic, whose outputs settles at the values of the state before the next clock edge
- At the rising clock edge, all the state elements are updated with the combinational logic outputs, and execution moves to the next clock cycle

Basic Phases of Instruction Execution

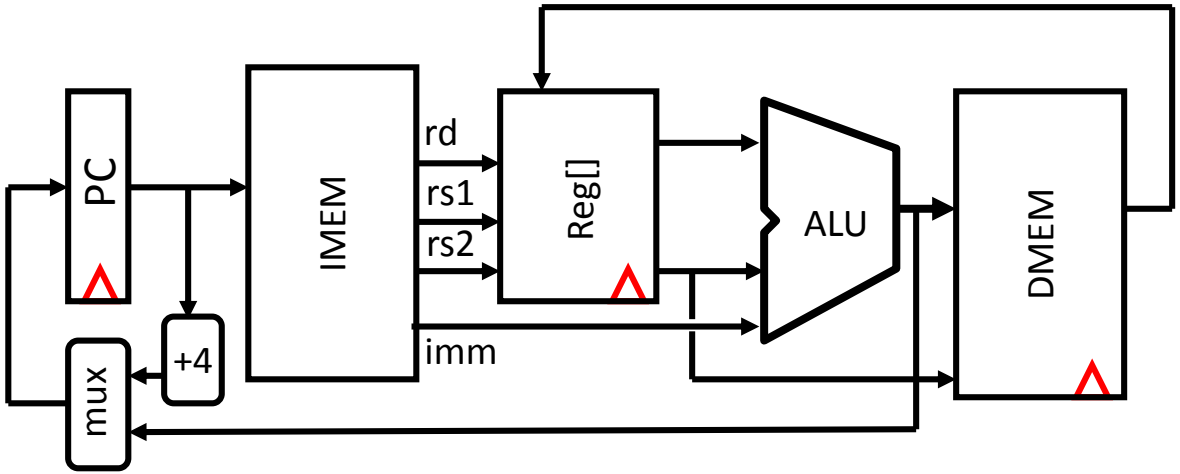

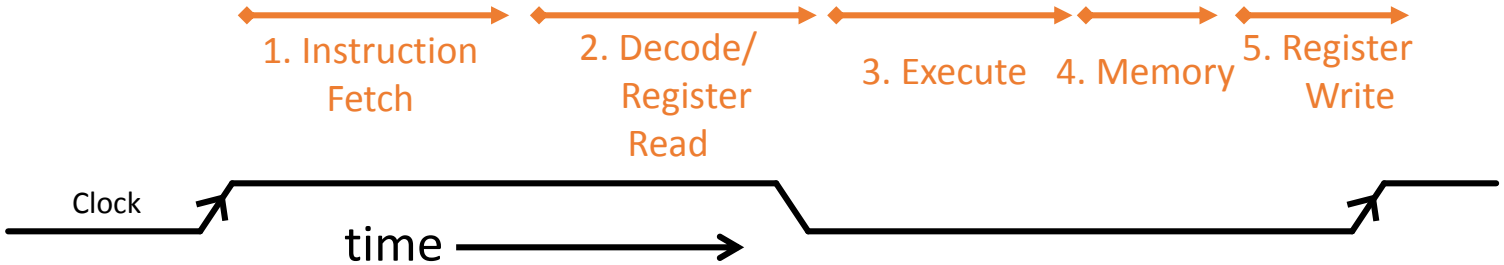

Reminder: RISC-V ALU

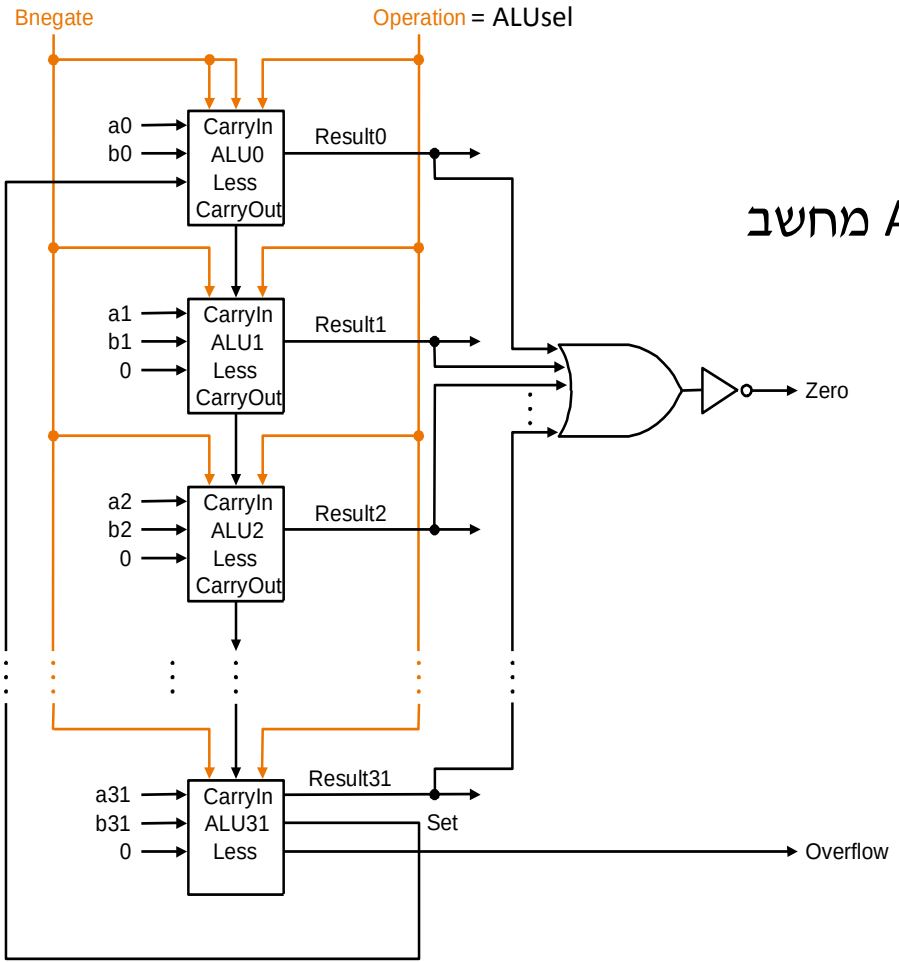

- כניסת הבקרה ALUsel קובעת מה ה-ALU מחשב
- ALU הוא מערכת צירופית

Reminder: RISC-V (RV32) Register File

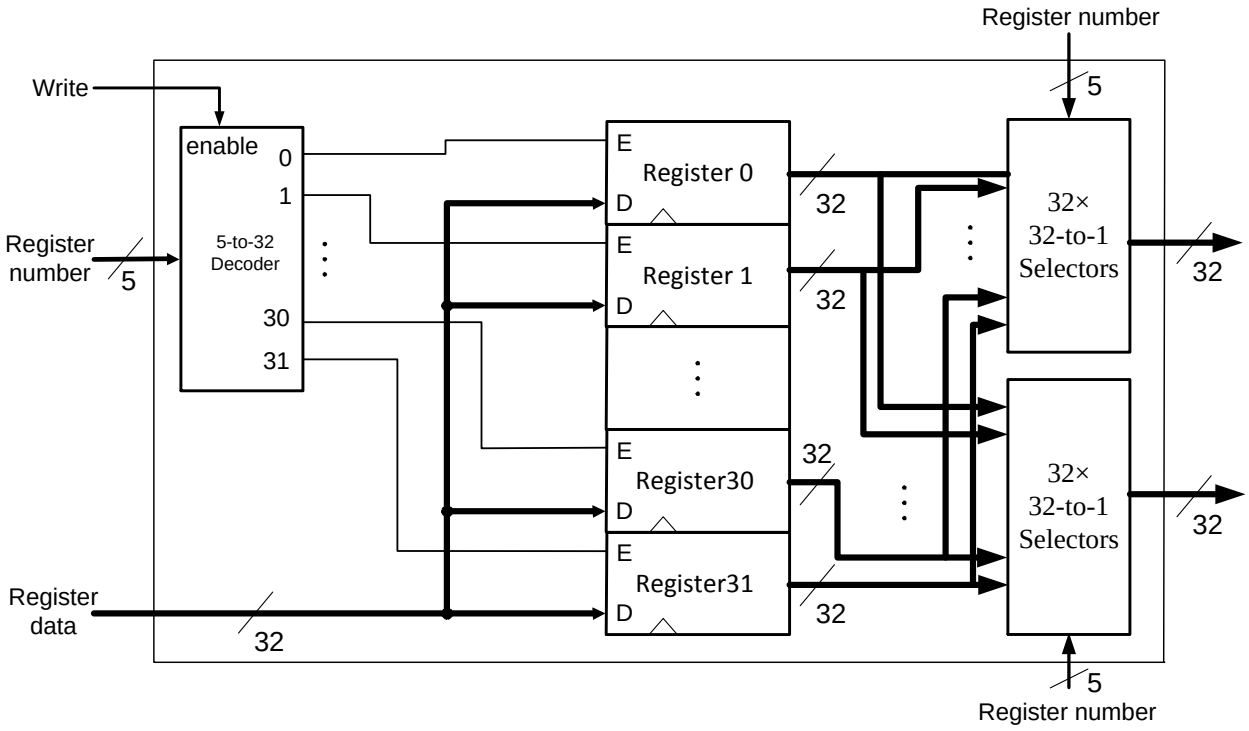

- קריאה צירופית
- כתיבה סינכרונית

Implementing the **add** instruction

0000000	rs2	rs1	000	rd	0110011	ADD

`add rd, rs1, rs2`

- Instruction makes two changes to machine's state:
  - **`Reg[rd] = Reg[rs1] + Reg[rs2]`**
  - **`PC = PC + 4`**

Datapath for **add**

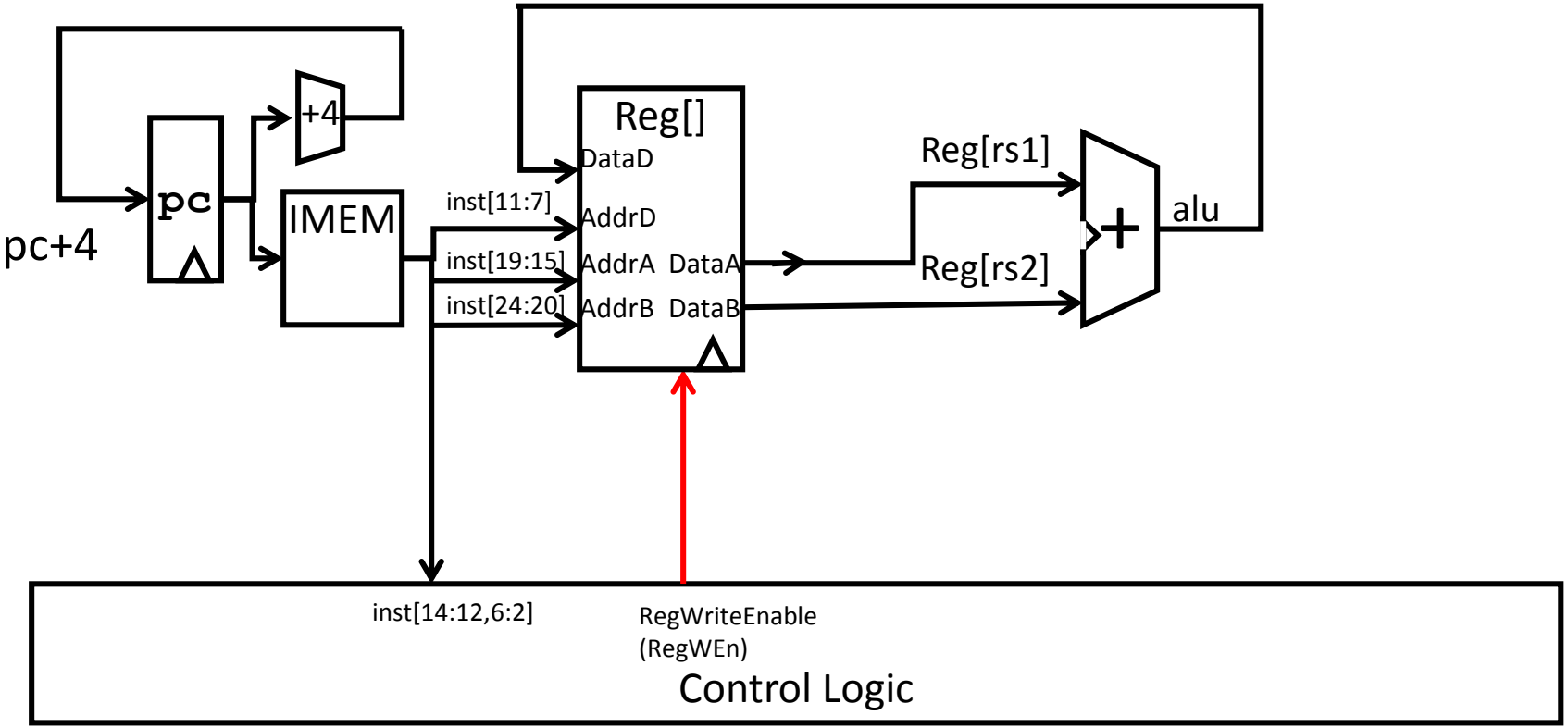

Timing Diagram for **add**

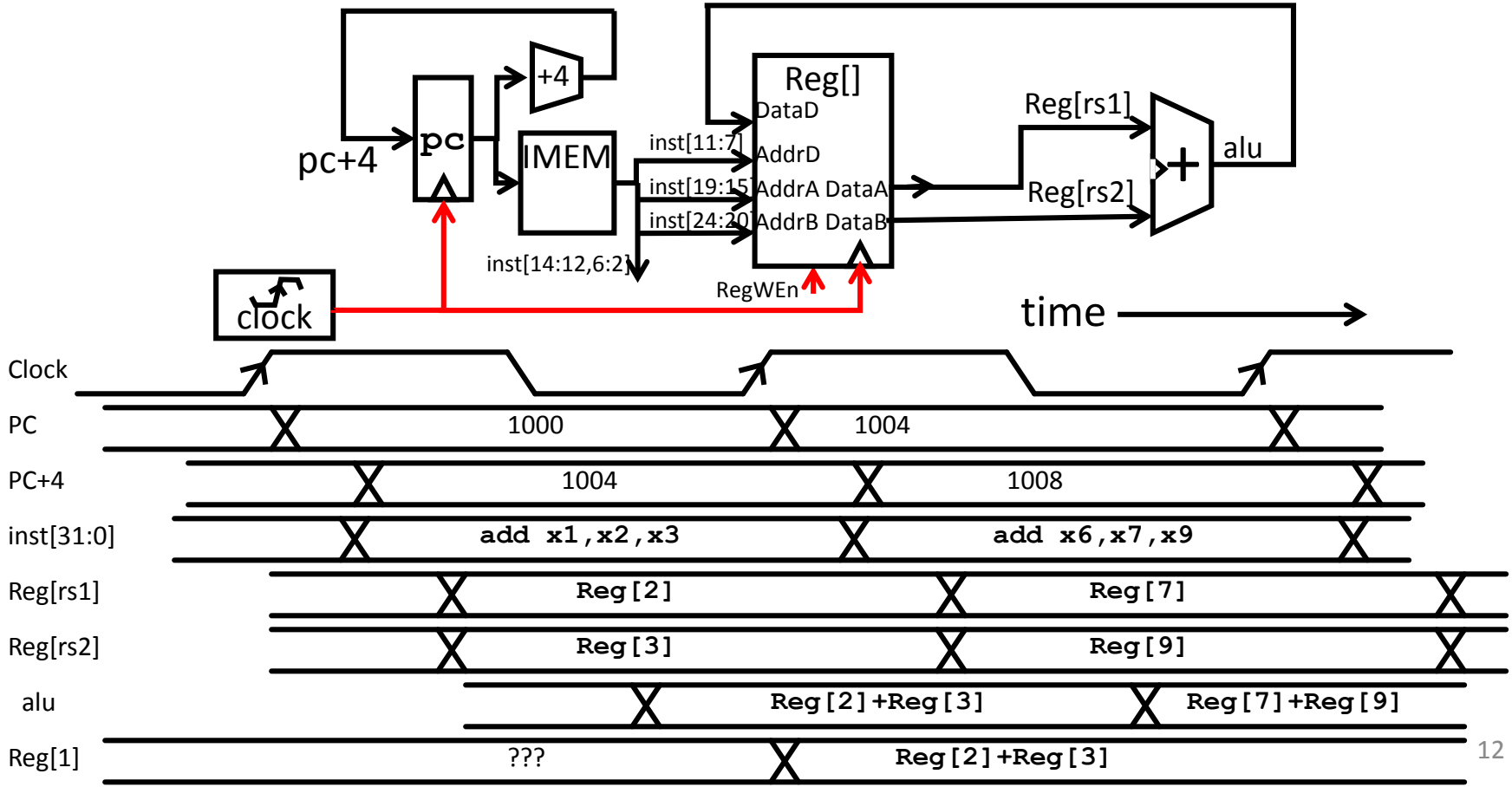

Implementing the **sub** instruction

0000000	rs2	rs1	000	rd	0110011	ADD
0100000	rs2	rs1	000	rd	0110011	SUB

`sub rd, rs1, rs2`

- Almost the same as add, except now have to subtract operands instead of adding them
- **`inst[30]`** selects between add and subtract
  - Connected to ALU-Ctrl (see next slide)

Datapath for **add/sub**

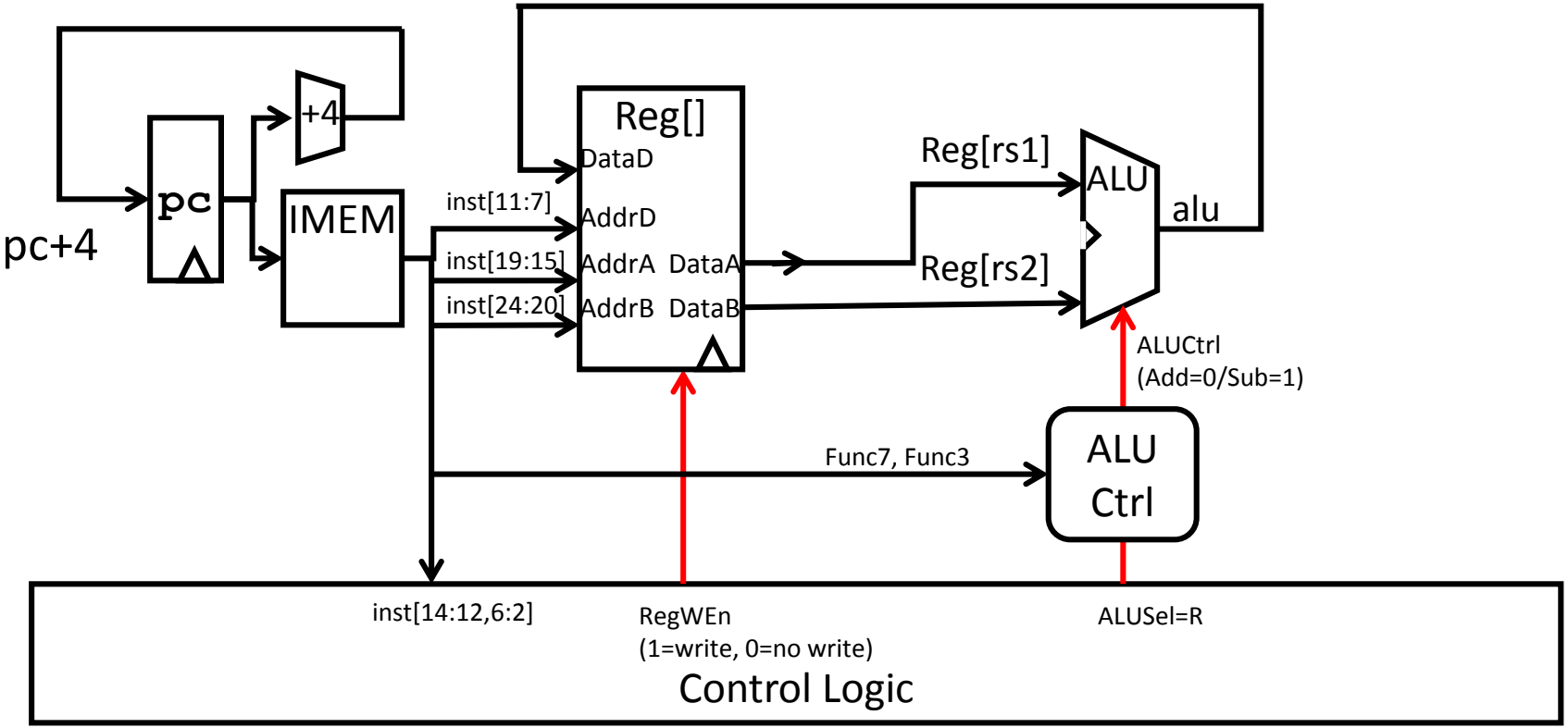

Implementing other R-Format instructions

0000000	rs2	rs1	000	rd	0110011	ADD
0100000	rs2	rs1	000	rd	0110011	SUB
0000000	rs2	rs1	001	rd	0110011	SLL
0000000	rs2	rs1	010	rd	0110011	SLT
0000000	rs2	rs1	011	rd	0110011	SLTU
0000000	rs2	rs1	100	rd	0110011	XOR
0000000	rs2	rs1	101	rd	0110011	SRL
0100000	rs2	rs1	101	rd	0110011	SRA
0000000	rs2	rs1	110	rd	0110011	OR
0000000	rs2	rs1	111	rd	0110011	AND

- All implemented by decoding funct3 and funct7 fields and selecting appropriate ALU function

Implementing the **addi** instruction

- RISC-V Assembly Instruction:

```
addi   x15,x1,-50
```

31 – 20	19 – 15	14 – 12	11 – 7	6 – 0
imm[11:0]	rs1	funct3	rd	opcode
12	5	3	5	7

111111001110	00001	000	01111	0010011
imm=-50	rs1=1	ADD	rd=15	OP-Imm

Datapath for **add/sub**

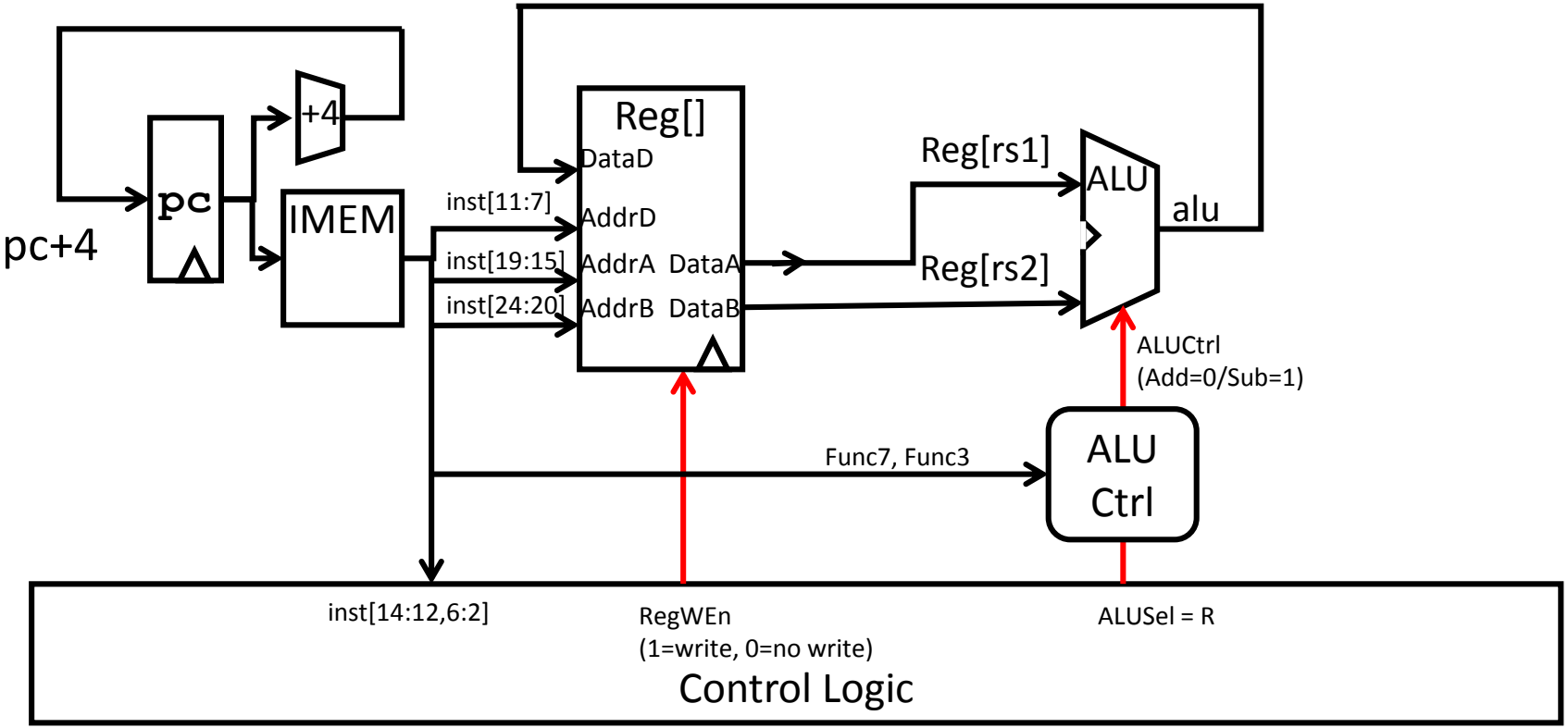

Adding **addi** to datapath

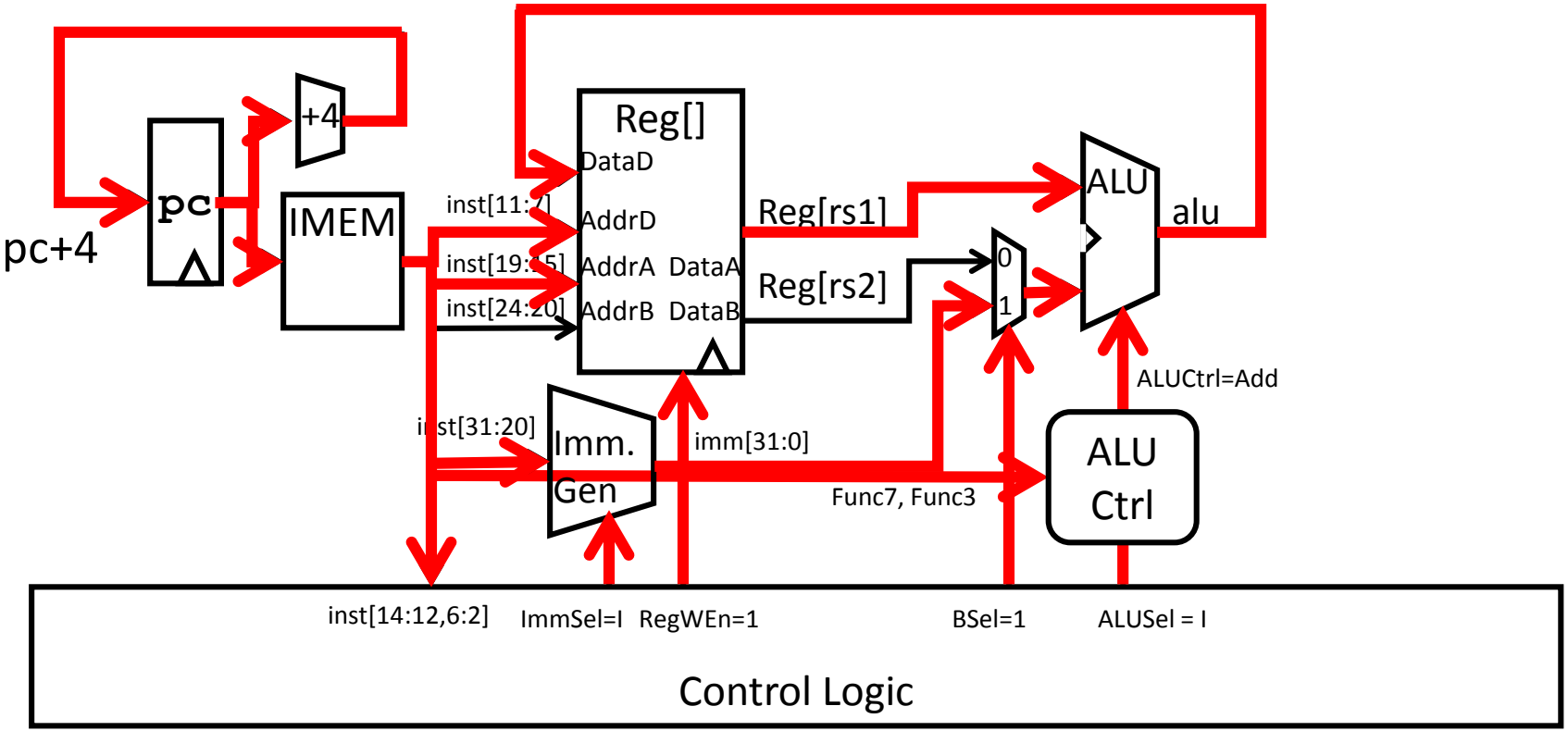

I-Format immediates

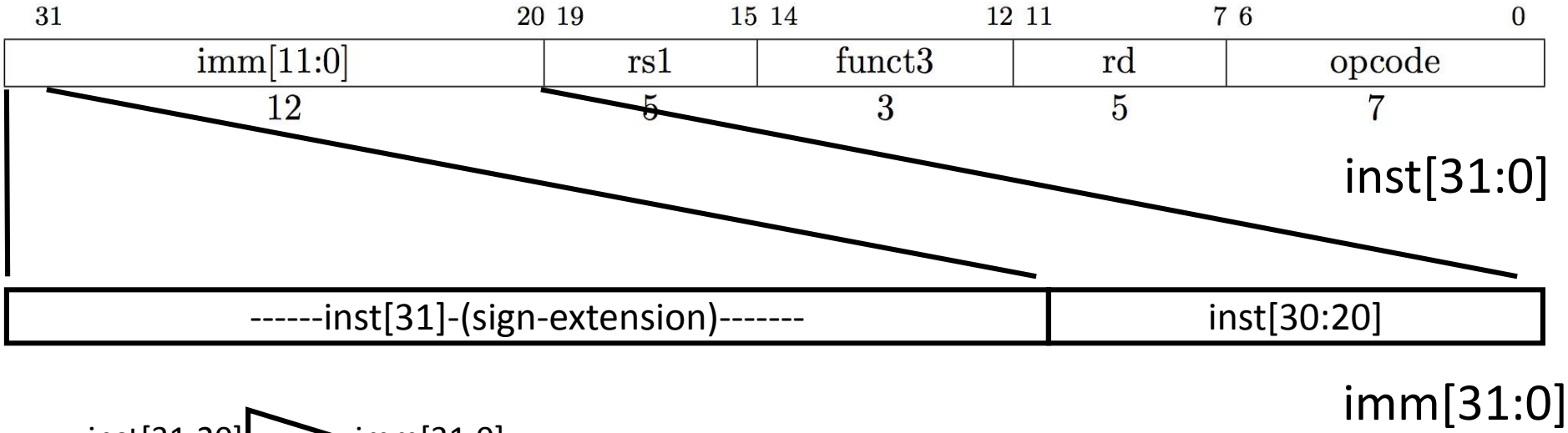

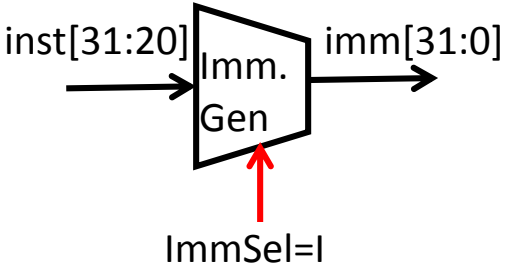

- High 12 bits of instruction (inst[31:20]) copied to low 12 bits of immediate (imm[11:0])
- Immediate is sign-extended by copying value of inst[31] to fill the upper 20 bits of the immediate value (imm[31:12])

Adding **`addi`** to datapath

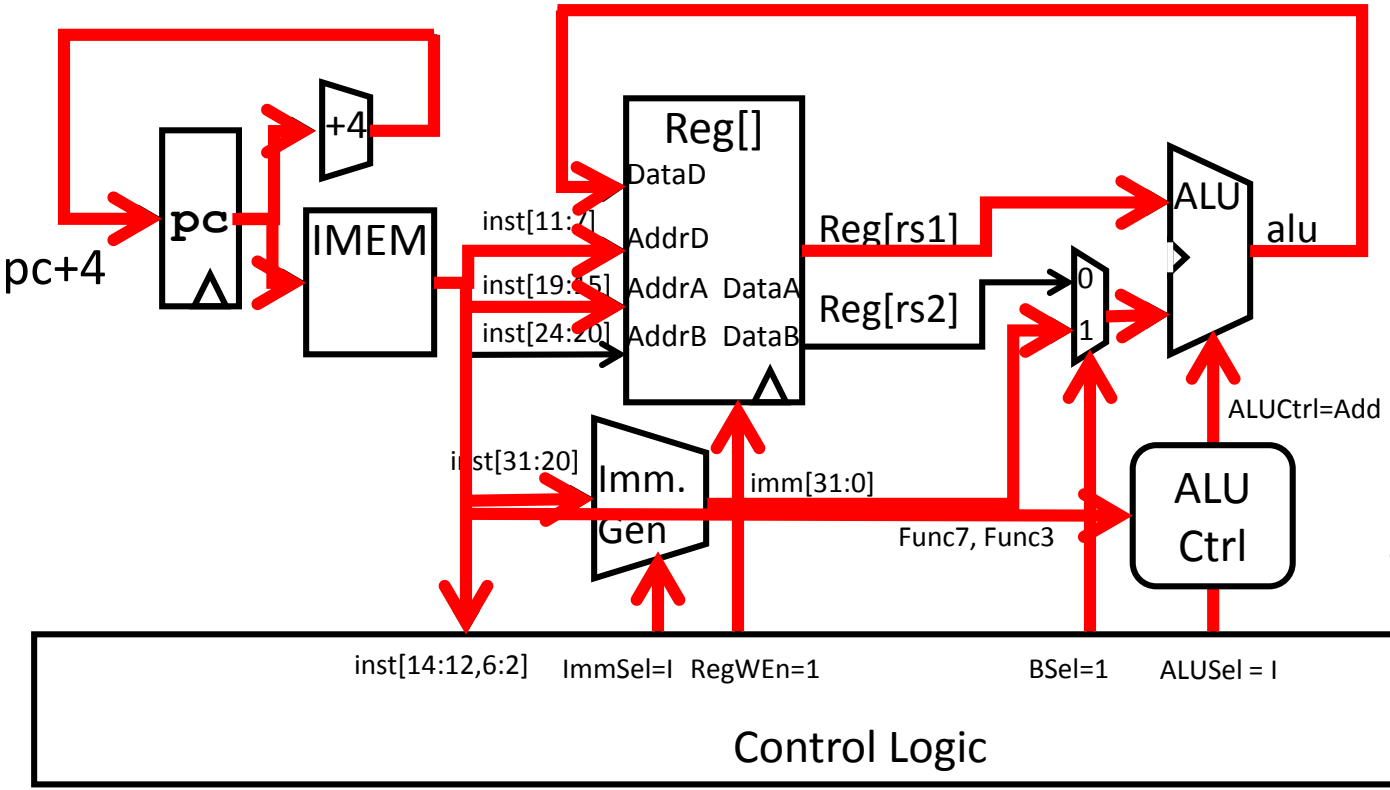

*Also works for all other I-format arithmetic instruction (**`slti,sltiu, andi,ori,xori, slli,srli,srai`**) just by changing ALUCtrl*

Implementing Load Word instruction

- RISC-V Assembly Instruction:

```
lw x14, 8(x2)
```

31 – 20	19 – 15	14 – 12	11 – 7	6 – 0
imm[11:0]	rs1	funct3	rd	opcode
12	5	3	5	7

000000001000	00010	010	01110	0000011
imm=+8	rs1=2	LW	rd=14	LOAD

Adding **addi** to datapath

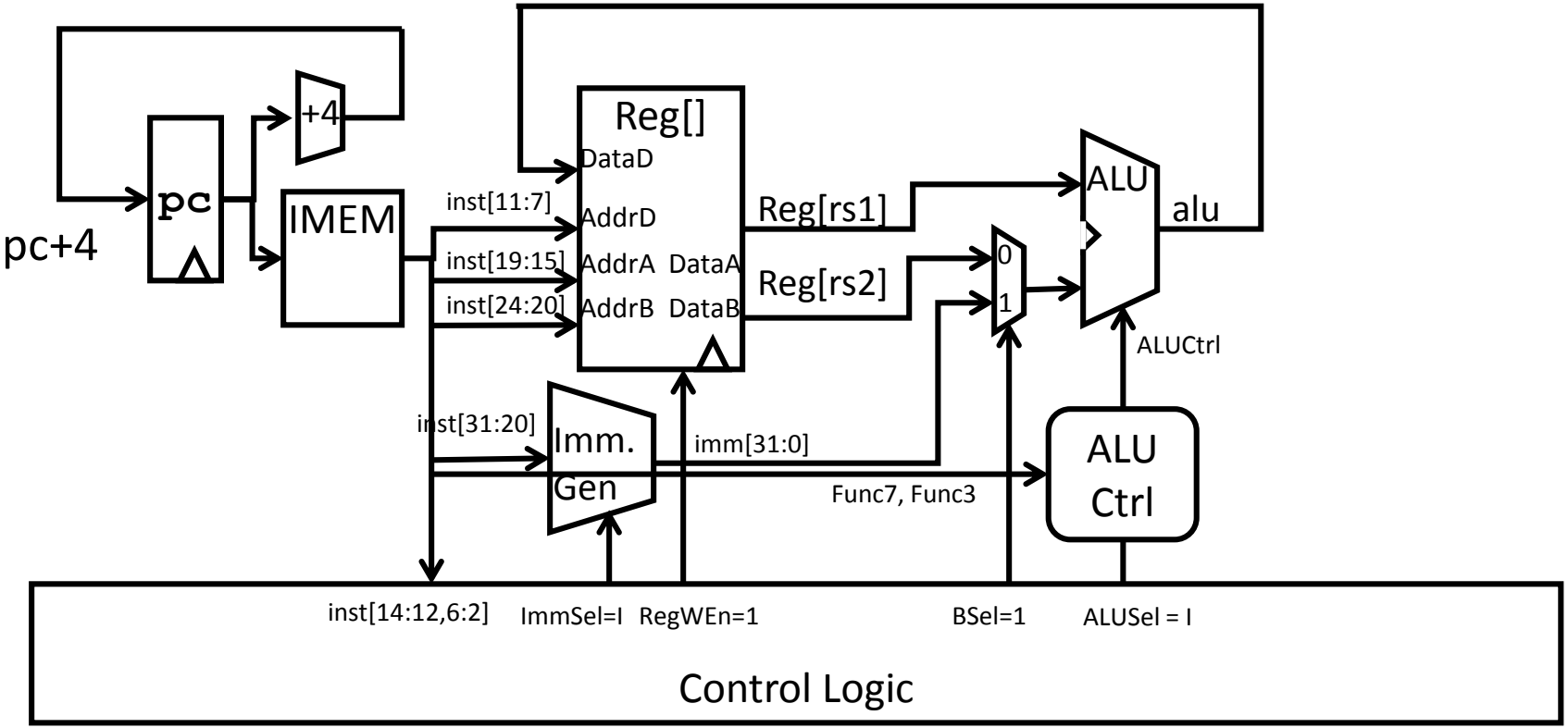

Adding **lw** to datapath

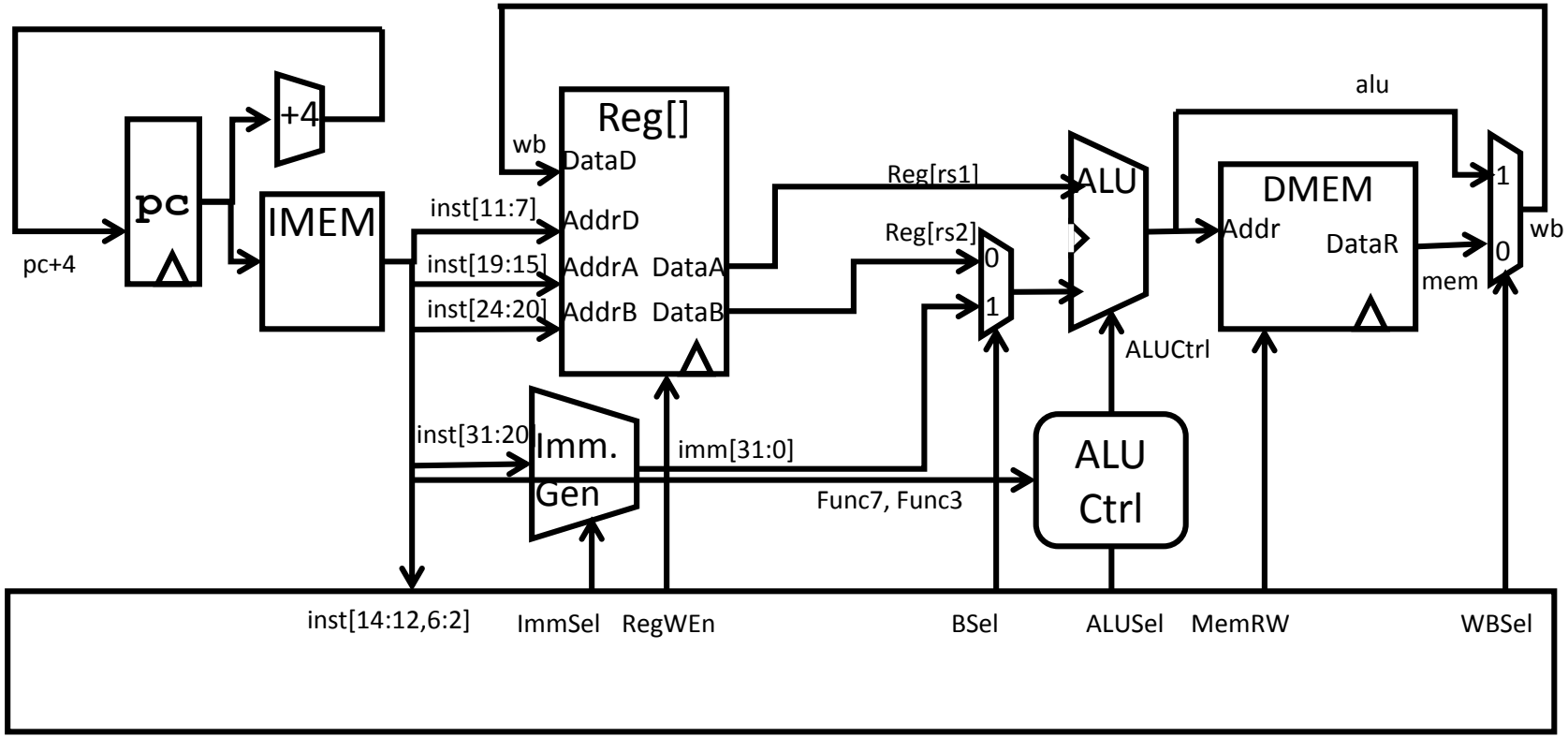

Adding **lw** to datapath

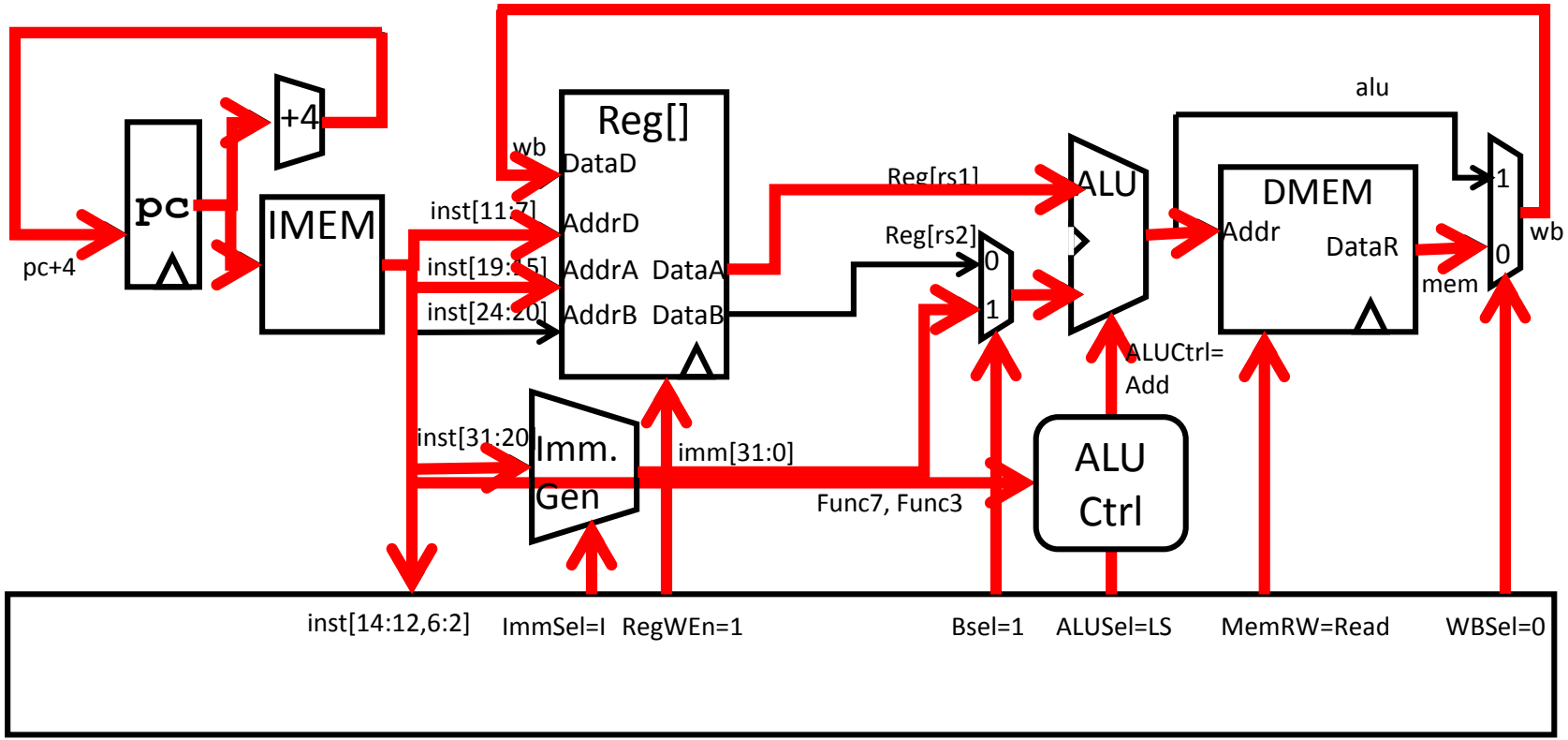

All RV32 Load Instructions

imm[11:0]	rs1	000	rd	0000011	LB
imm[11:0]	rs1	001	rd	0000011	LH
imm[11:0]	rs1	010	rd	0000011	LW
imm[11:0]	rs1	100	rd	0000011	LBU
imm[11:0]	rs1	101	rd	0000011	LHU

funct3 field encodes size and signedness of load data

- Supporting the narrower loads **requires additional circuits** to extract the correct byte/halfword from the value loaded from memory, and sign- or zero-extend the result to 32 bits before writing back to register file

Implementing Store Word instruction

- RISC-V Assembly Instruction:

```
sw x14, 8(x2)
```

31 – 25	24 – 20	19 – 15	14 – 12	11 – 7	6 – 0
imm[11:5]	rs2	rs1	funct3	imm[4:0]	opcode
7	5	5	3	5	7
offset[11:5]	src	base	width	offset[4:0]	STORE

0000000	01110	00010	010	01000	0100011
offset[11:5] =0	rs2=14	rs1=2	SW	offset[4:0] =8	STORE

0000000	01000

combined 12-bit offset = 8

Adding **lw** to datapath

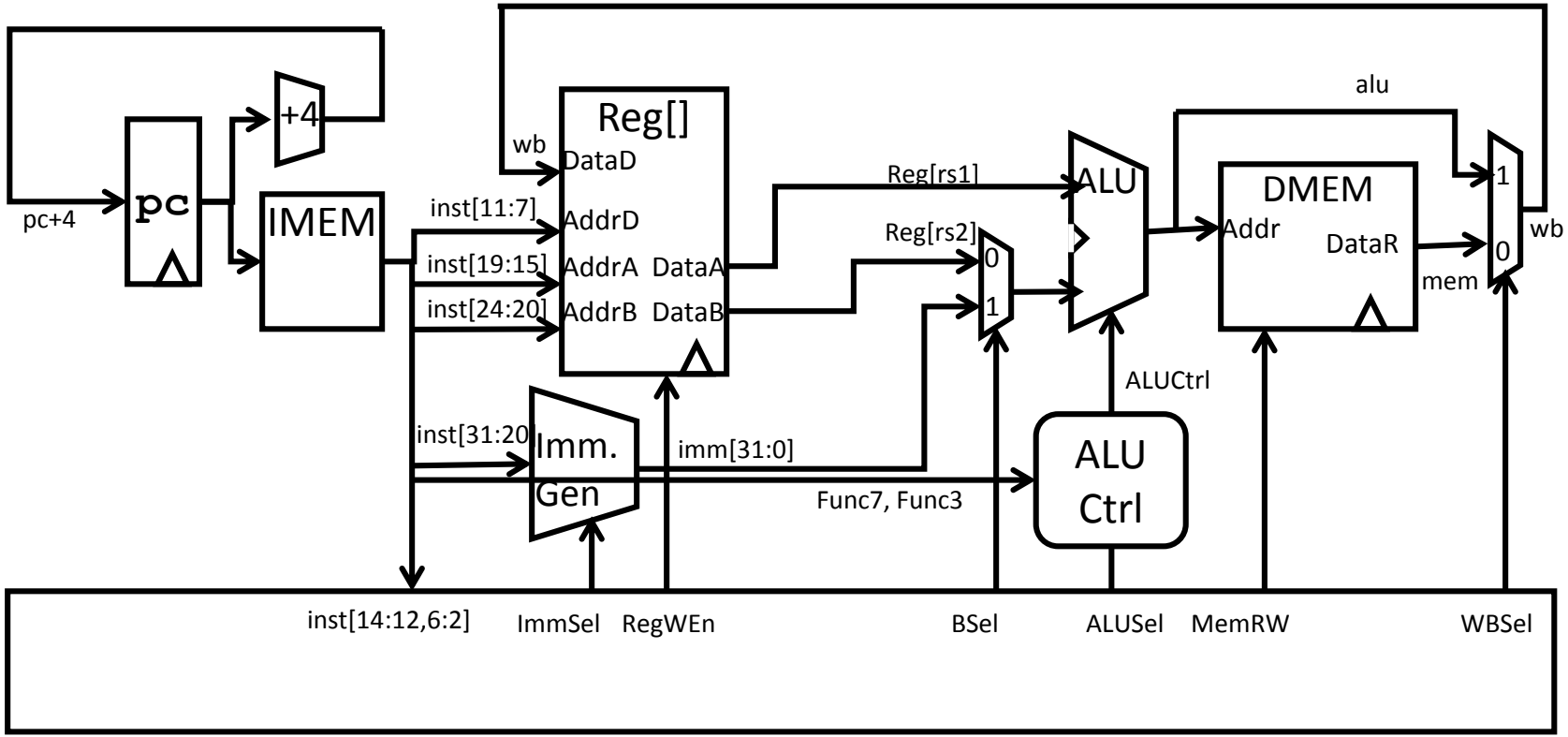

Adding **sw** to datapath

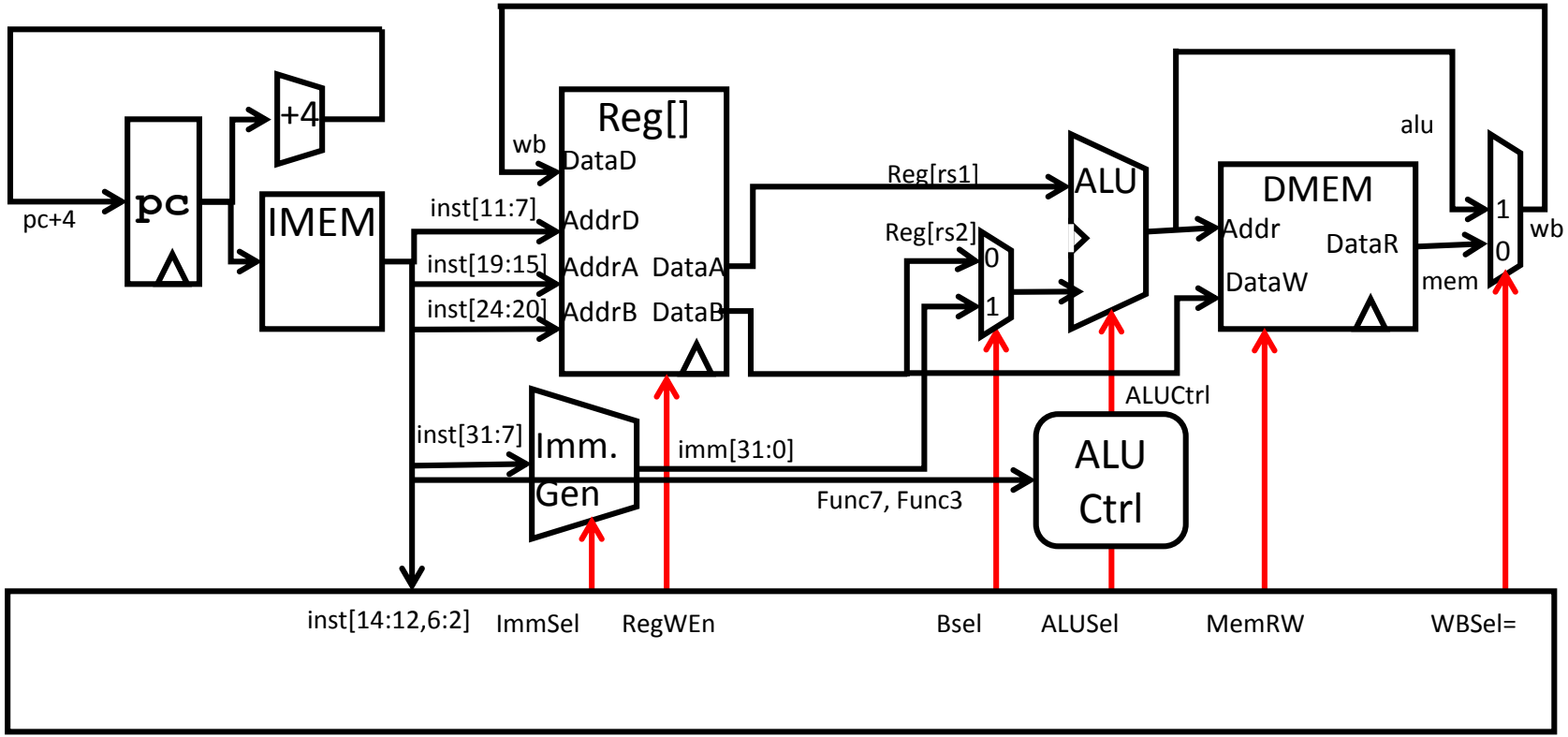

Adding **sw** to datapath

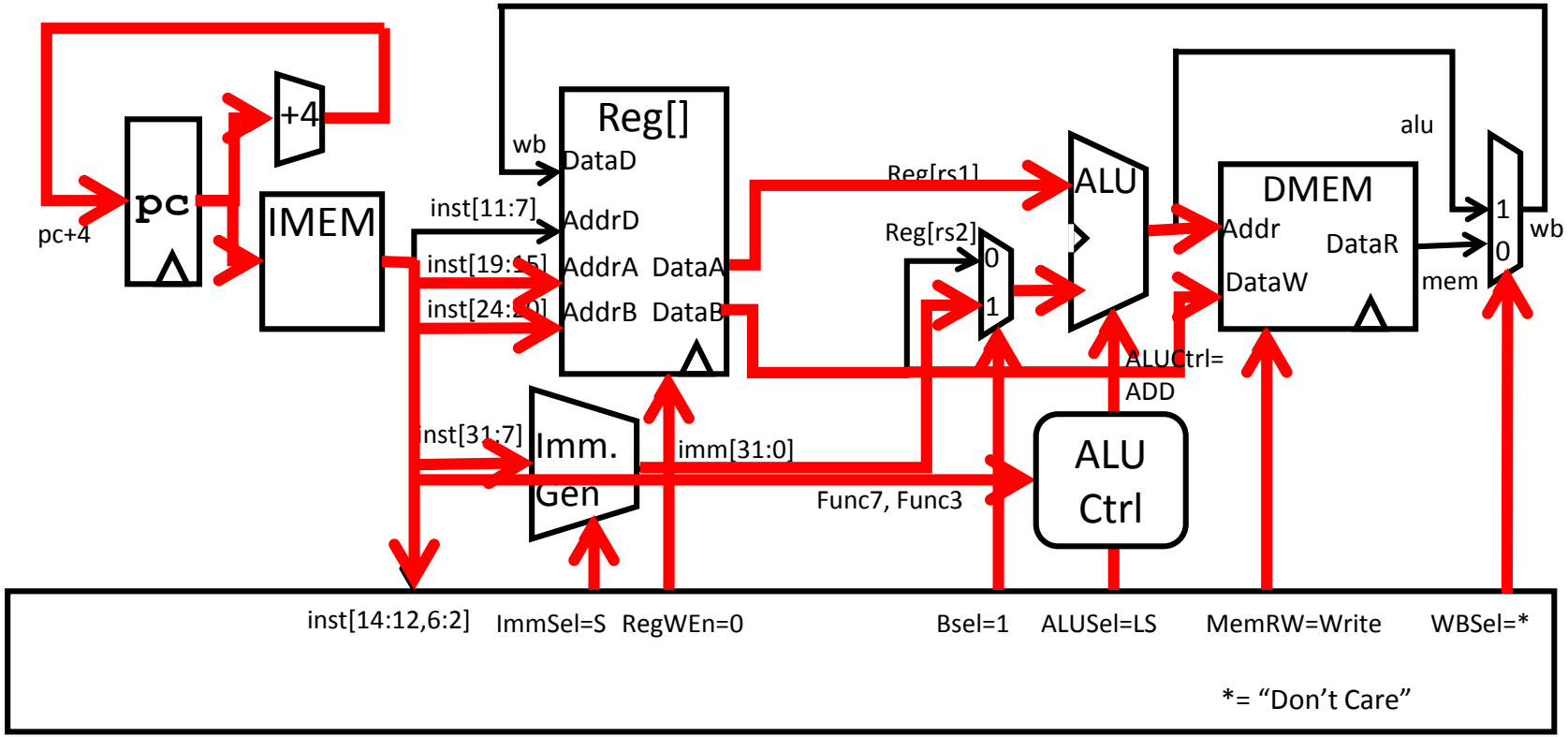

I-Format immediates

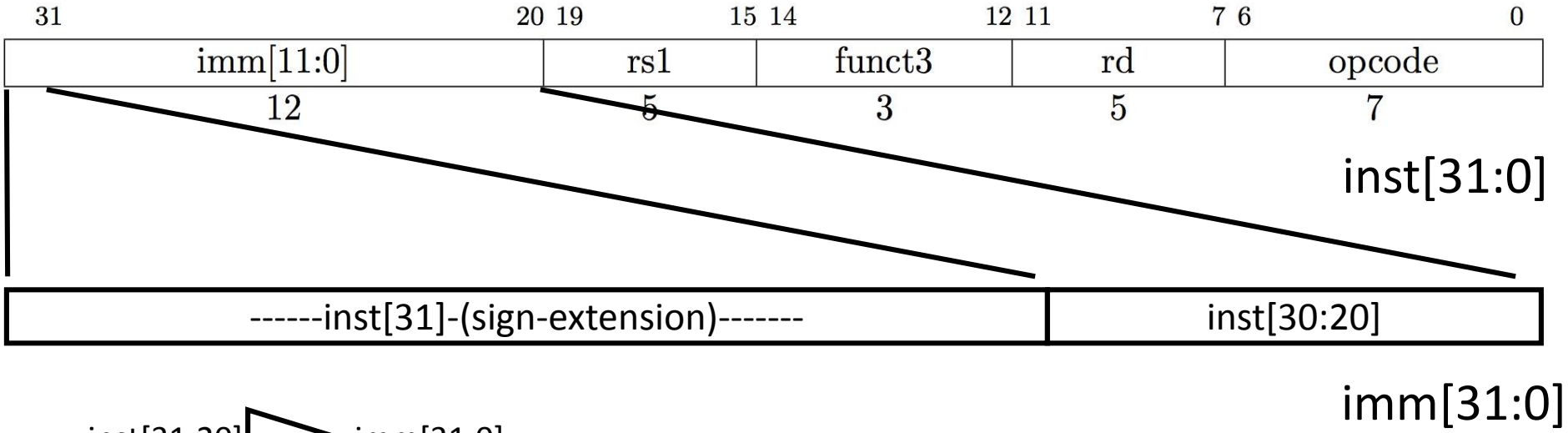

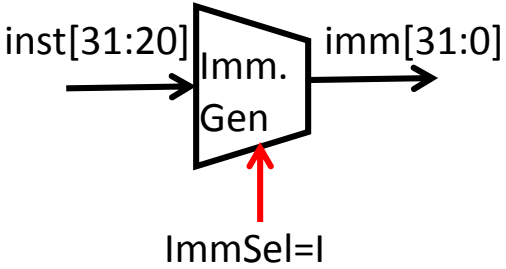

- High 12 bits of instruction (inst[31:20]) copied to low 12 bits of immediate (imm[11:0])
- Immediate is sign-extended by copying value of inst[31] to fill the upper 20 bits of the immediate value (imm[31:12])

I & S Immediate Generator

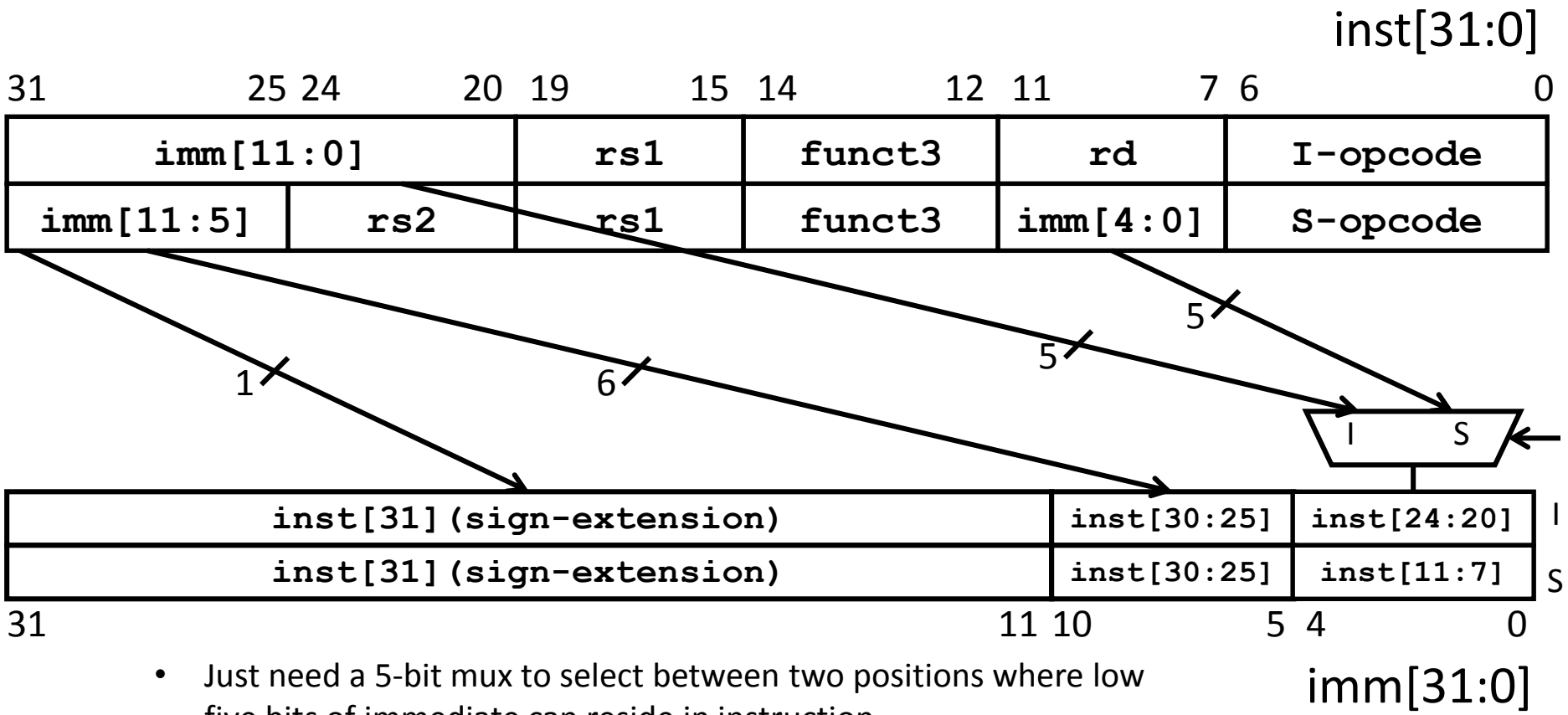

- Just need a 5-bit mux to select between two positions where low five bits of immediate can reside in instruction
- Other bits in immediate are **wired** to fixed positions in instruction

Implementing Branches

31	30 25	24 20	19 15	14 12	11 8	7	6 0
imm[12]	imm[10:5]	rs2	rs1	funct3	imm[4:1]	imm[11]	opcode
1	6	5	5	3	4	1	7

- B-format is mostly same as S-Format, with two register sources (rs1/rs2) and a 12-bit immediate
- But now immediate represents values -4096 to +4094 in 2-byte increments
- The 12 immediate bits encode *even* 13-bit signed byte offsets (lowest bit of offset is always zero, so no need to store it)

Adding **sw** to datapath

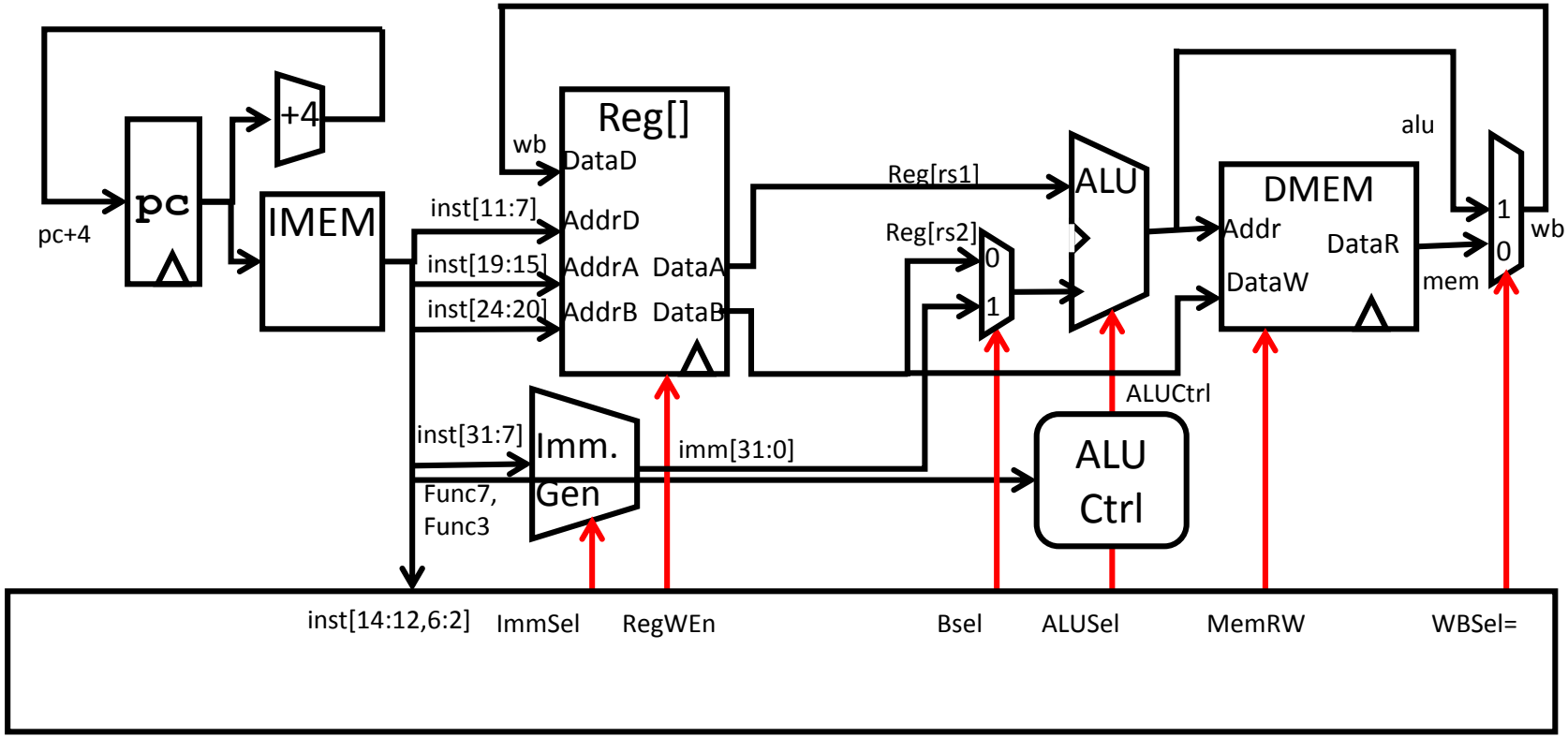

Adding branches to datapath

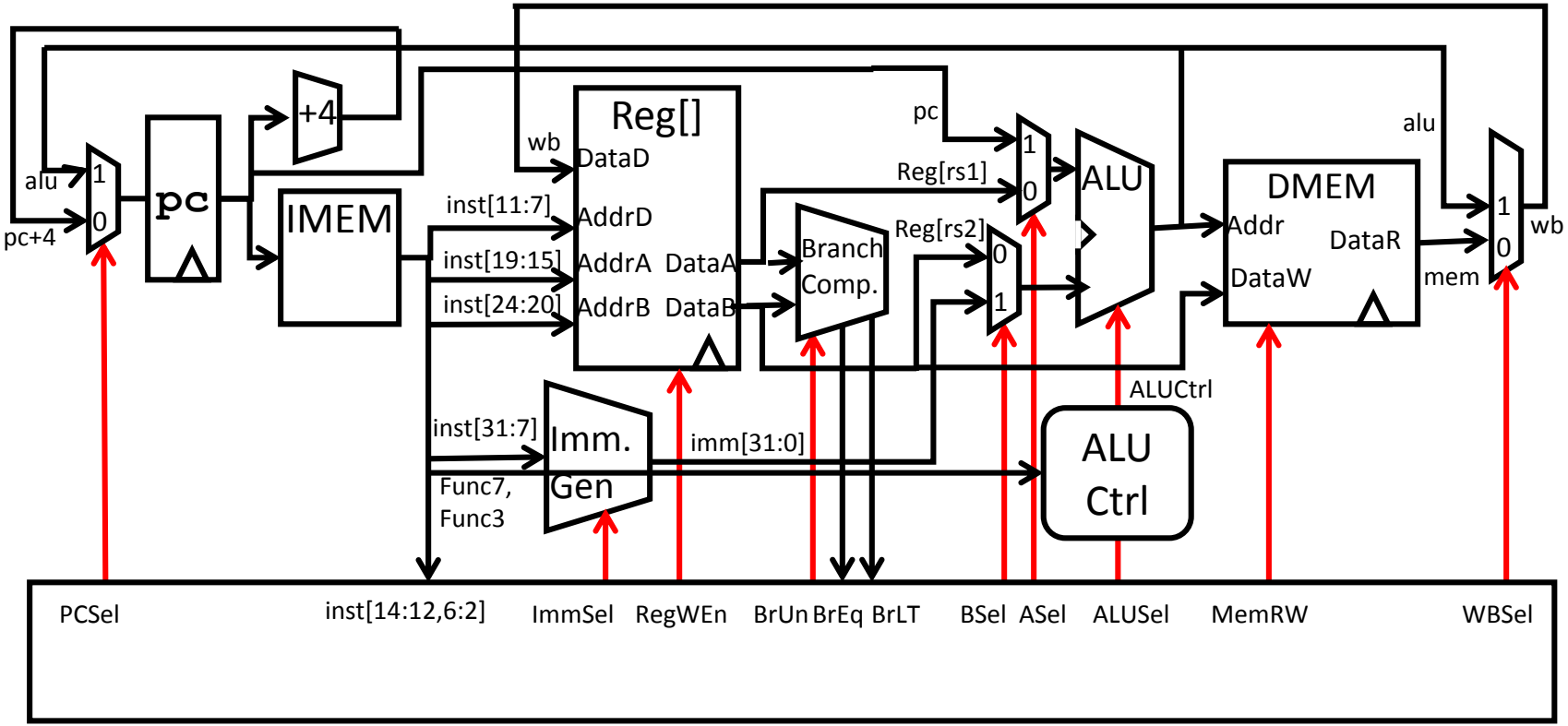

Adding branches to datapath

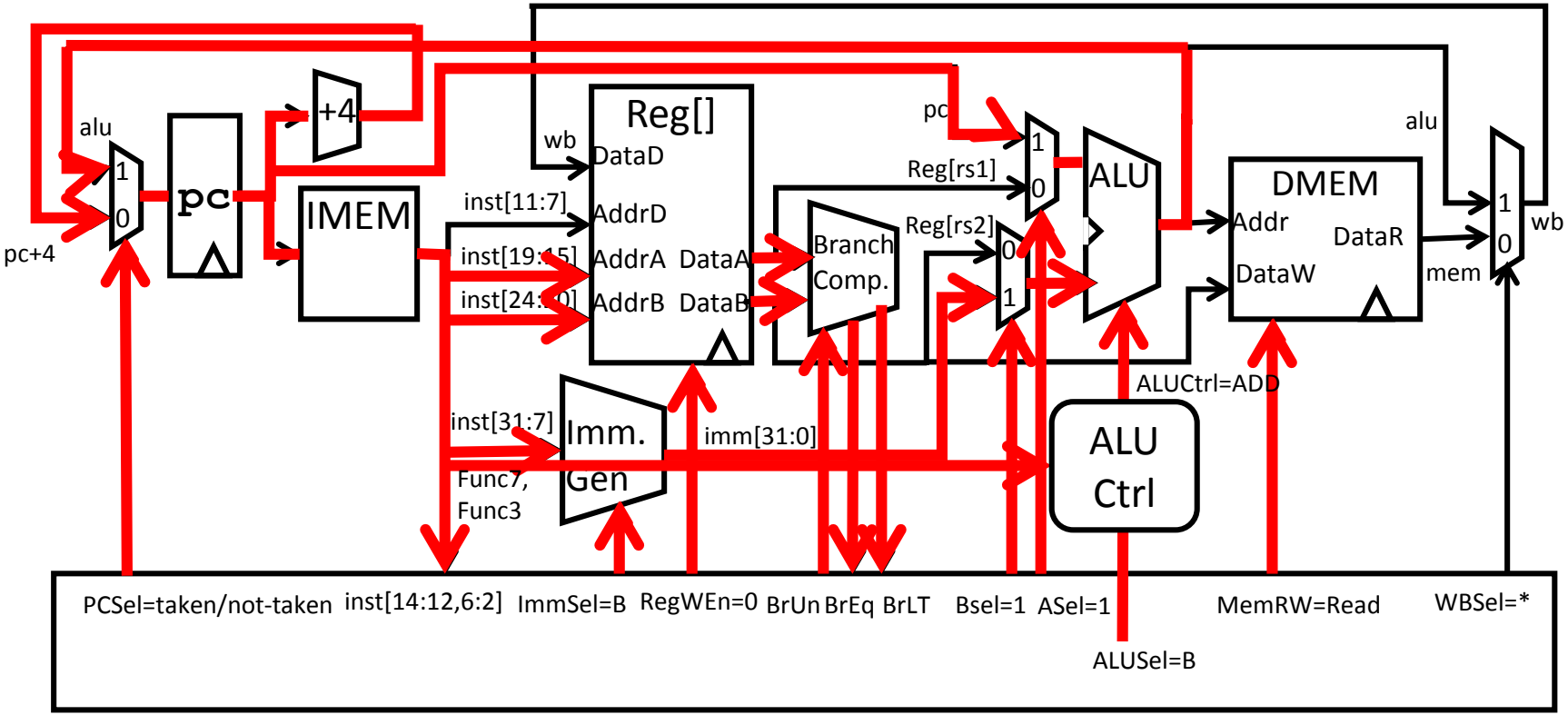

Branch Comparator

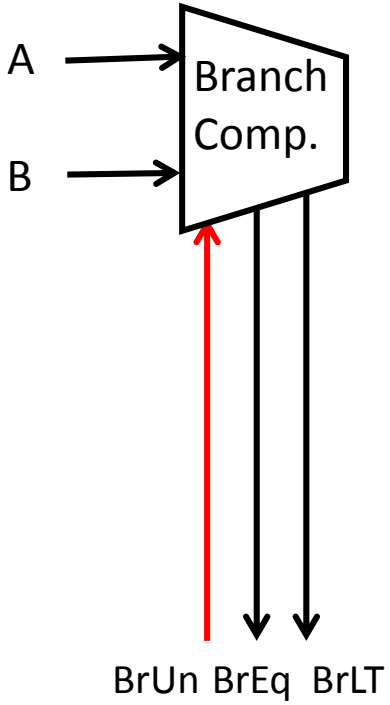

- BrEq = 1, if A=B
- BrLT = 1, if A < B
- BrUn =1 selects unsigned comparison for BrLT, 0=signed
- BGE branch: A >= B, if !(A<B)

Multiply Branch Immediates by Shift?

- 12-bit immediate encodes PC-relative offset of -4096 to +4094 bytes in multiples of 2 bytes
- Standard approach: treat immediate as in range -2048..+2047, then shift left by 1 bit to multiply by 2 for branches

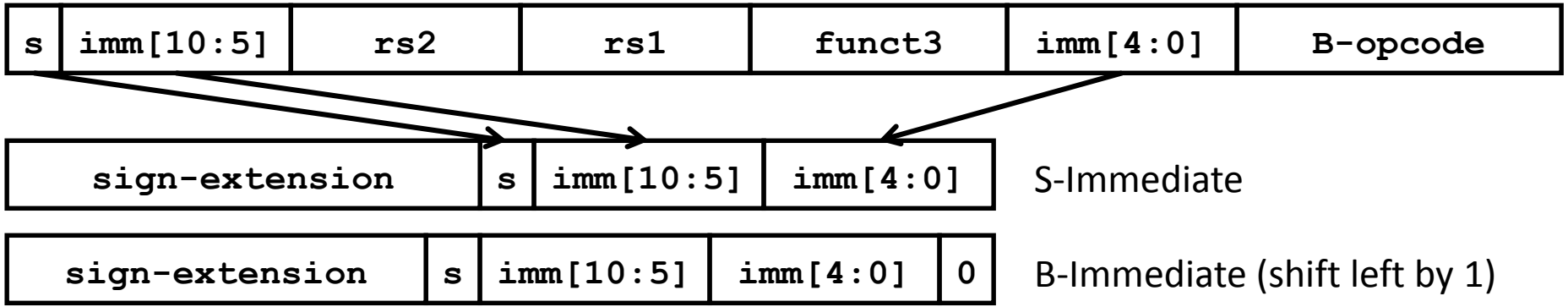

Each instruction immediate bit can appear in one of two places in output immediate value – so need one 2-way mux per bit

RISC-V Branch Immediates

- 12-bit immediate encodes PC-relative offset of -4096 to +4094 bytes in multiples of 2 bytes
- RISC-V approach: keep 11 immediate bits in **fixed** position in output value, and rotate LSB of S-format to be bit 12 of B-format

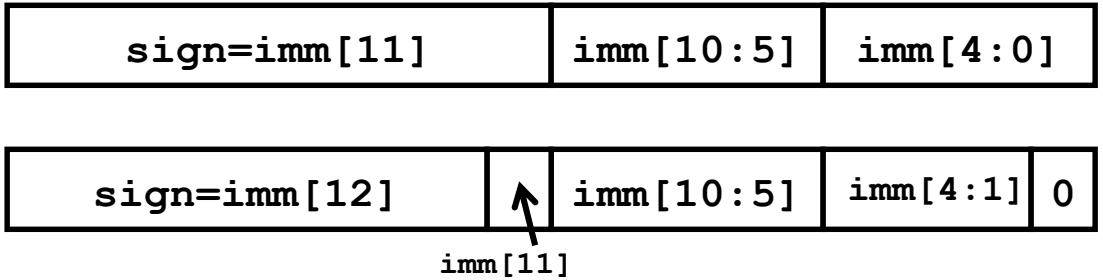

S-Immediate

B-Immediate (shift left by 1)

Only one bit changes position between S and B, so only need a single-bit 2-way mux

RISC-V Immediate Encoding

Instruction Encodings, inst[31:0]

31 30 25	24 21	20 19 15	14 12	11 8	7	6 0	
funct7	rs2	rs1	funct3	rd		opcode	R-type
imm[11:0]		rs1	funct3	rd		opcode	I-type
imm[11:5]	rs2	rs1	funct3	imm[4:0]		opcode	S-type
imm[12] imm[10:5]	rs2	rs1	funct3	imm[4:1]	imm[11]	opcode	B-type

32-bit immediates produced, imm[31:0]

31 30 20	19 12	11	10 5	4 1	0	
— inst[31] —			inst[30:25]	inst[24:21]	inst[20]	I-immediate
— inst[31] —			inst[30:25]	inst[11:8]	inst[7]	S-immediate
— inst[31] —		inst[7]	inst[30:25]	inst[11:8]	0	B-immediate

Upper bits sign-extended from inst[31] always

Only bit 7 of instruction changes role in immediate between S and B

Implementing **JALR** Instruction (I-Format)

31 – 20	19 – 15	14 – 12	11 – 7	6 – 0
imm[11:0]	rs1	funct3	rd	opcode
12	5	3	5	7
offset[11:0]	base	0	dest	JALR

- JALR rd, rs, immediate
  - Writes PC+4 to Reg[rd] (return address)
  - Sets PC = Reg[rs1] + immediate
  - Uses same immediates as arithmetic and loads
    - ***no*** multiplication by 2 bytes

Adding branches to datapath

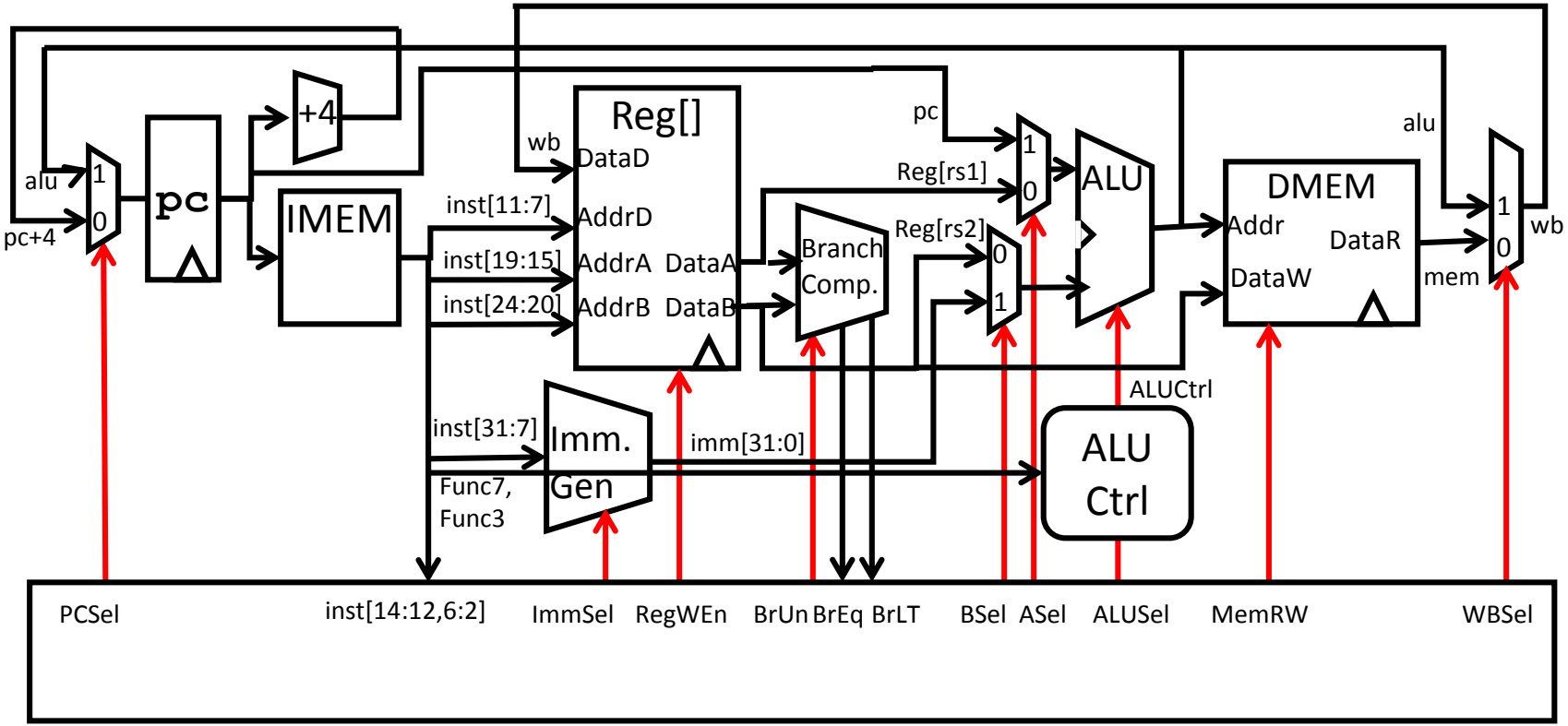

Adding **jalr** to datapath

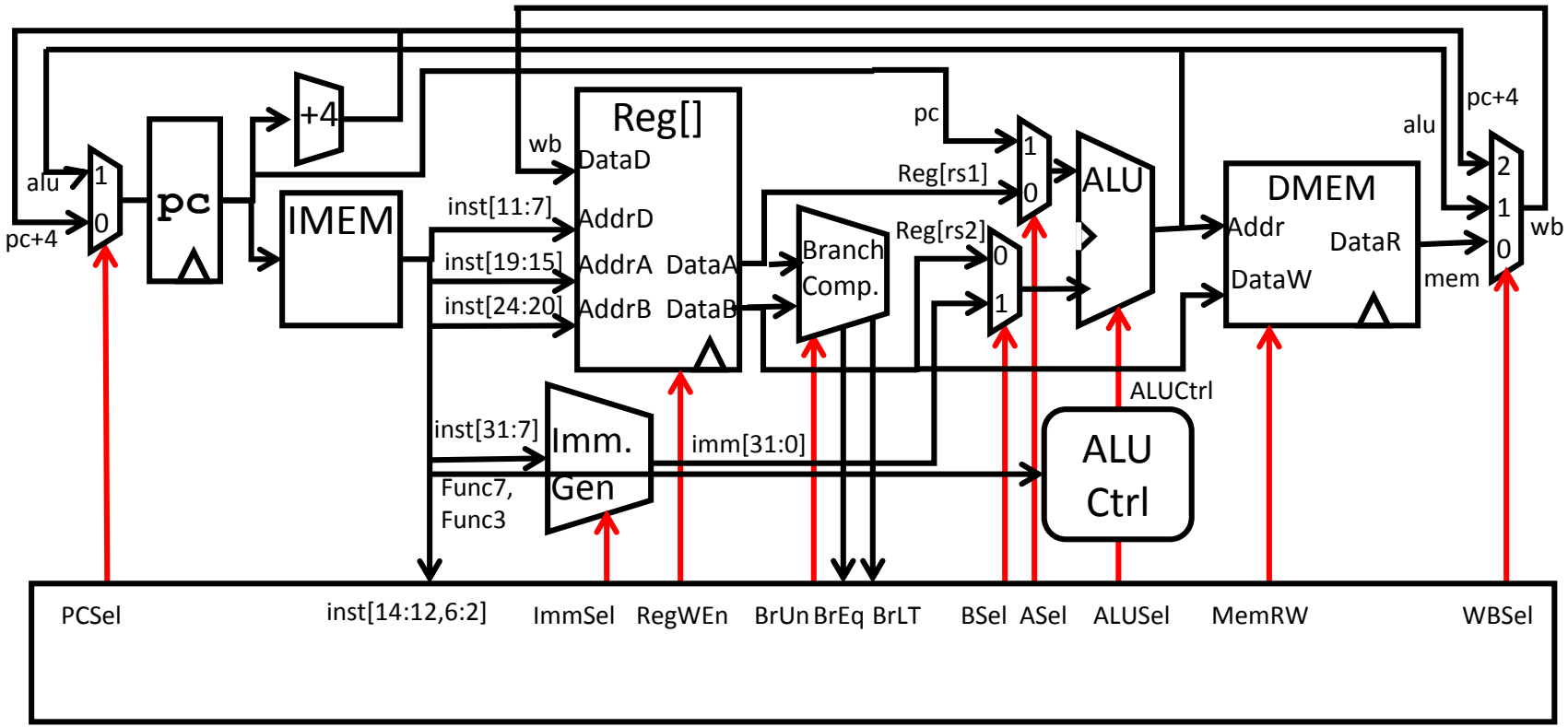

Adding **jalr** to datapath

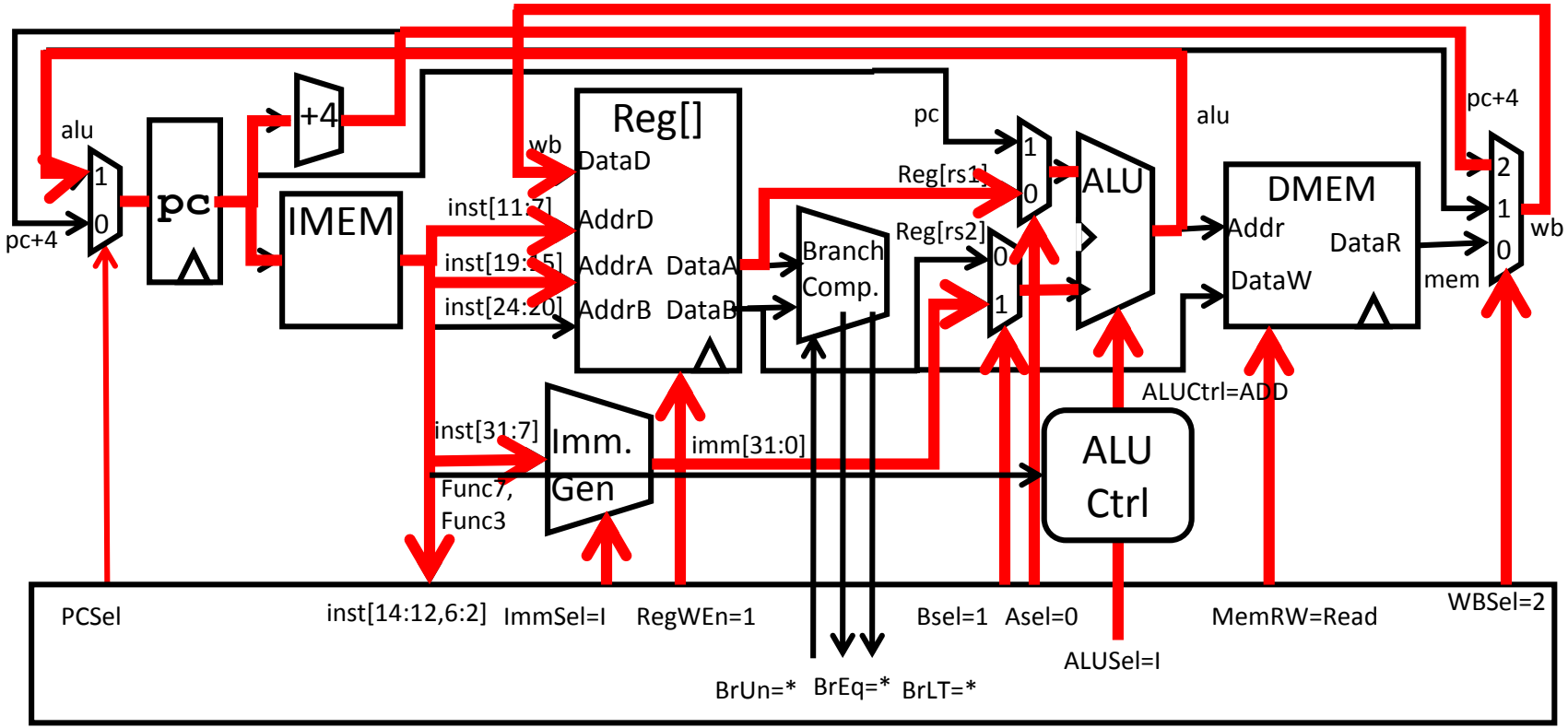

Implementing `jal` Instruction

31	30 … 21	20	19 … 12	11 … 7	6 … 0
imm[20]	imm[10:1]	imm[11]	imm[19:12]	rd	opcode
1	10	1	8	5	7
	offset[20:1]			dest	JAL

- JAL saves PC+4 in Reg[rd] (the return address)
- Set PC = PC + offset (PC-relative jump)
- Target somewhere within $\pm 2^{19}$ locations, 2 bytes apart
  - $\pm 2^{18}$ 32-bit instructions
- Immediate encoding optimized similarly to branch instruction to reduce hardware cost

Adding `jal` to datapath

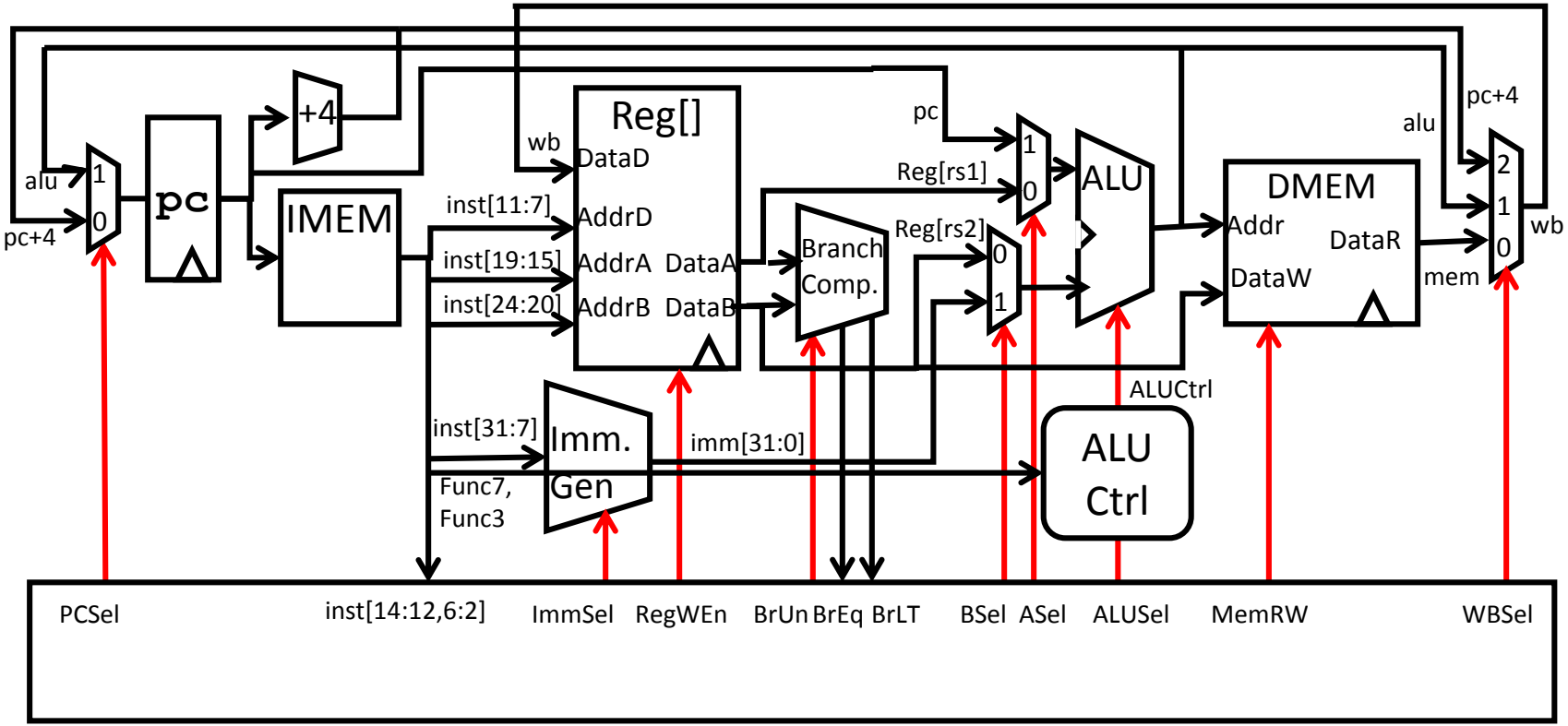

Adding `jal` to datapath

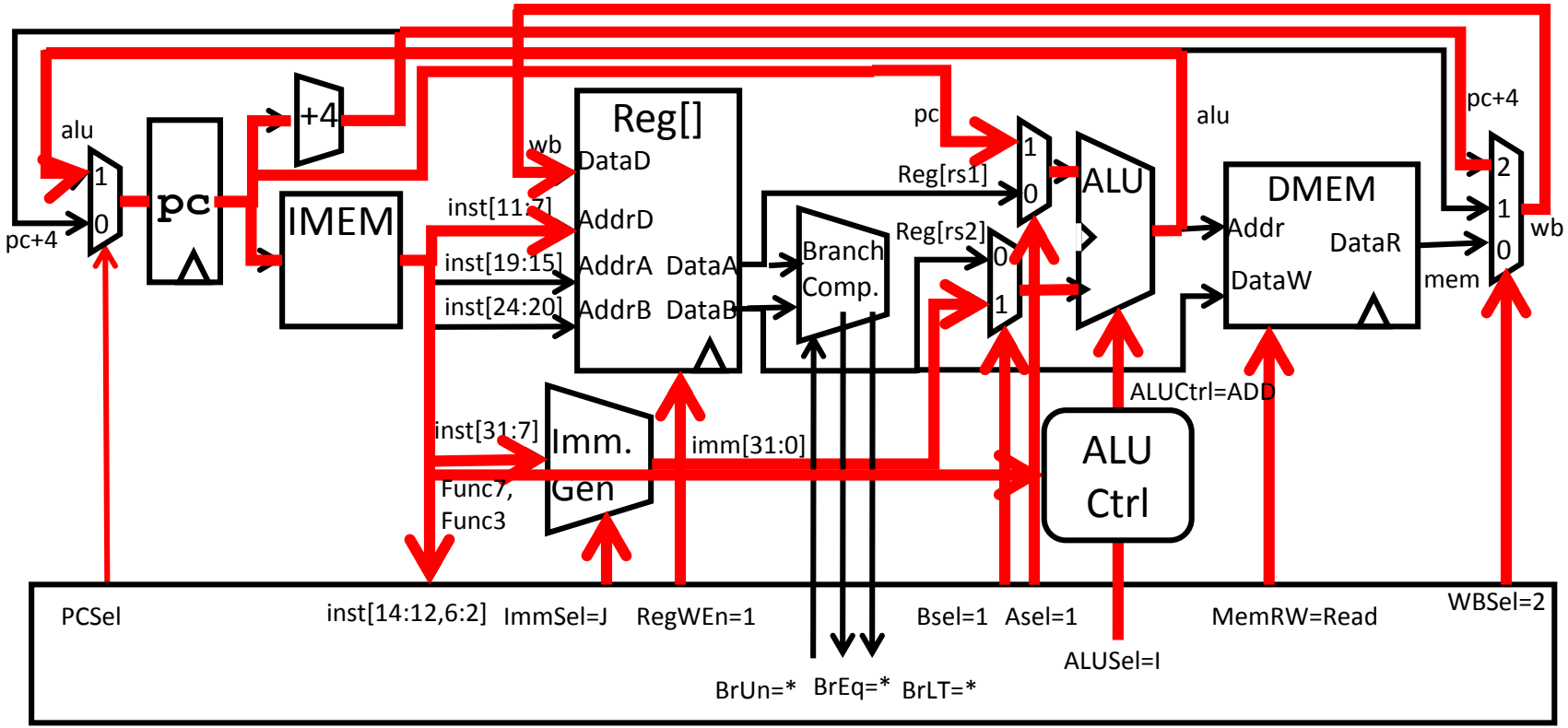

“Upper Immediate” instructions

31 … 12	11 … 7	6 … 0
imm[31:12]	rd	opcode
20	5	7
U-immediate[31:12]	dest	LUI
U-immediate[31:12]	dest	AUIPC

- Has 20-bit immediate in upper 20 bits of 32-bit instruction word
- One destination register, rd
- Used for two instructions
  - LUI – Load Upper Immediate (add to zero)
  - AUIPC – Add Upper Immediate to PC

Implementing `lui`

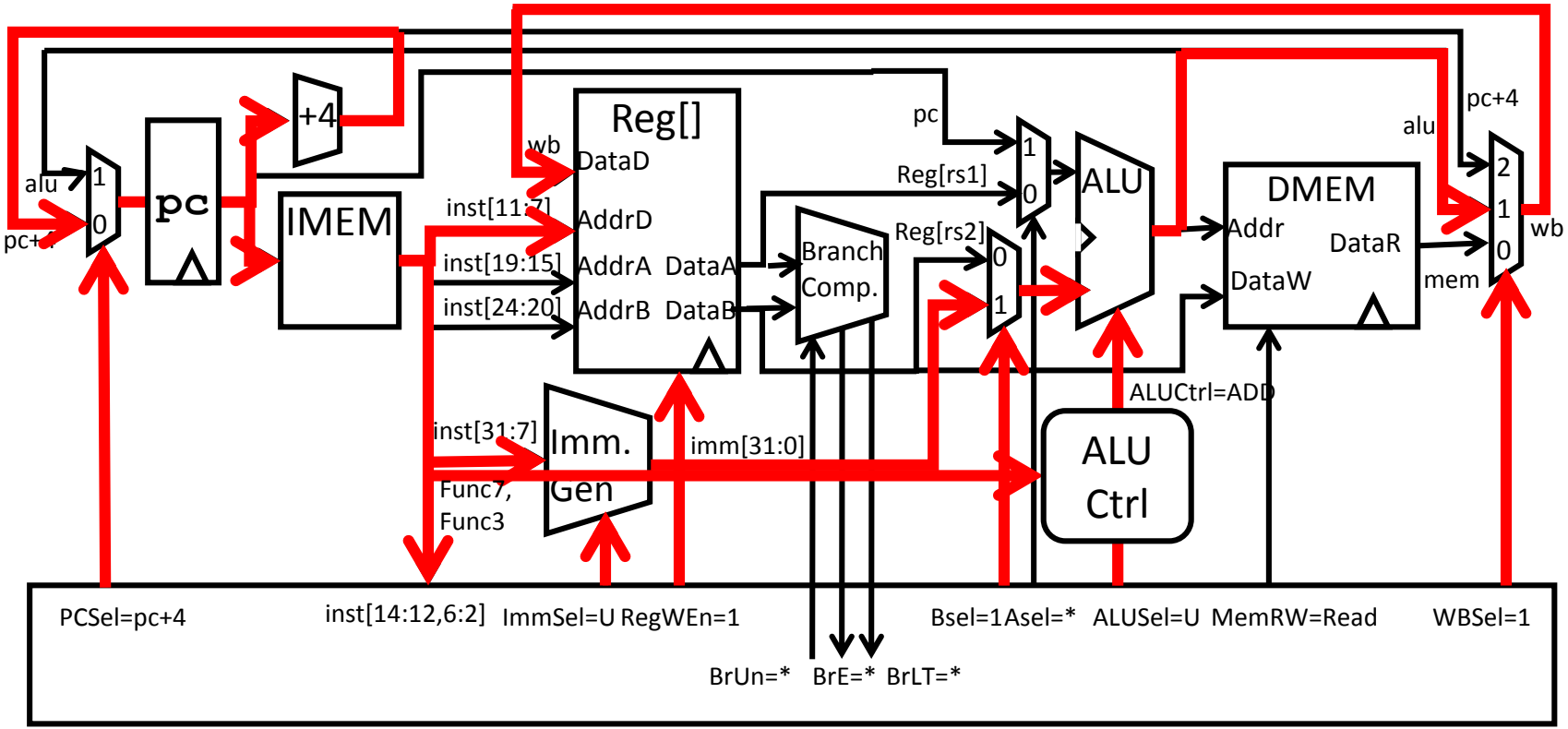

Implementing **auipc**

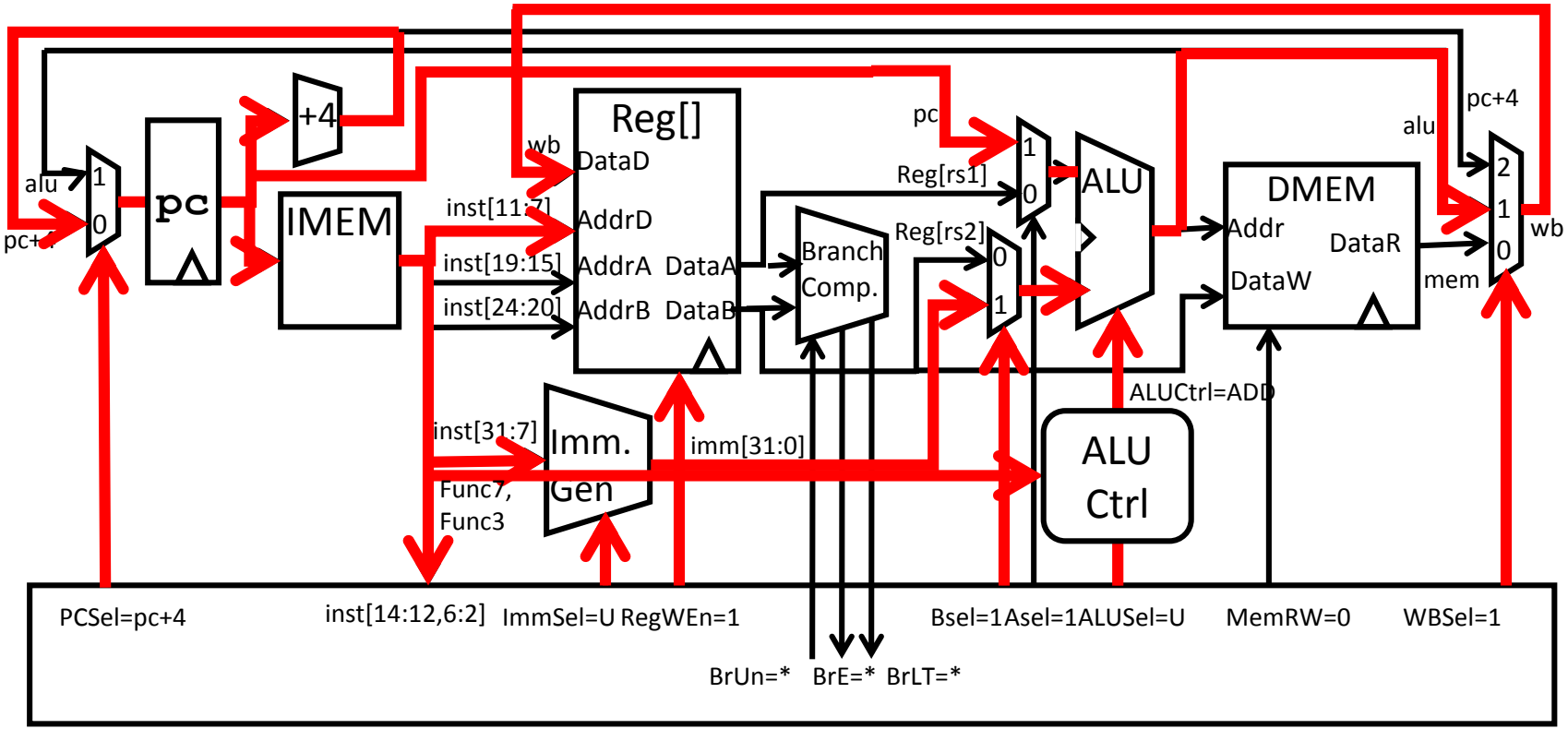

Recap: Complete RV32I ISA

imm[31:12]				rd	0110111	LUI
imm[31:12]				rd	0010111	AUIPC
imm[20|10:1|11|19:12]				rd	1101111	JAL
imm[11:0]		rs1	000	rd	1100111	JALR
imm[12|10:5]	rs2	rs1	000	imm[4:1|11]	1100011	BEQ
imm[12|10:5]	rs2	rs1	001	imm[4:1|11]	1100011	BNE
imm[12|10:5]	rs2	rs1	100	imm[4:1|11]	1100011	BLT
imm[12|10:5]	rs2	rs1	101	imm[4:1|11]	1100011	BGE
imm[12|10:5]	rs2	rs1	110	imm[4:1|11]	1100011	BLTU
imm[12|10:5]	rs2	rs1	111	imm[4:1|11]	1100011	BGEU
imm[11:0]		rs1	000	rd	0000011	LB
imm[11:0]		rs1	001	rd	0000011	LH
imm[11:0]		rs1	010	rd	0000011	LW
imm[11:0]		rs1	100	rd	0000011	LBU
imm[11:0]		rs1	101	rd	0000011	LHU
imm[11:5]	rs2	rs1	000	imm[4:0]	0100011	SB
imm[11:5]	rs2	rs1	001	imm[4:0]	0100011	SH
imm[11:5]	rs2	rs1	010	imm[4:0]	0100011	SW
imm[11:0]		rs1	000	rd	0010011	ADDI
imm[11:0]		rs1	010	rd	0010011	SLTI
imm[11:0]		rs1	011	rd	0010011	SLTIU
imm[11:0]		rs1	100	rd	0010011	XORI
imm[11:0]		rs1	110	rd	0010011	ORI
imm[11:0]		rs1	111	rd	0010011	ANDI

0000000	shamt	rs1	001	rd	0010011	SLLI
0000000	shamt	rs1	101	rd	0010011	SRLI
0100000	shamt	rs1	101	rd	0010011	SRAI
0000000	rs2	rs1	000	rd	0110011	ADD
0100000	rs2	rs1	000	rd	0110011	SUB
0000000	rs2	rs1	001	rd	0110011	SLL
0000000	rs2	rs1	010	rd	0110011	SLT
0000000	rs2	rs1	011	rd	0110011	SLTU
0000000	rs2	rs1	100	rd	0110011	XOR
0000000	rs2	rs1	101	rd	0110011	SRL
0100000	rs2	rs1	101	rd	0110011	SRA
0000000	rs2	rs1	110	rd	0110011	OR
0000000	rs2	rs1	111	rd	0110011	AND
0000 pred	succ	00000	000	00000	0001111	FENCE
0000 0000	0000	00000	001	00000	0001111	FENCE.I
000000000000		00000	000	00000	1110011	ECALL
000000000001		00000	000	00000	1110011	EBREAK
csr		rs1	001	rd	1110011	CSRRW
csr		rs1	010	rd	1110011	CSRRS
csr		rs1	011	rd	1110011	CSRRC
csr		zimm	101	rd	1110011	CSRRWI
csr		zimm	110	rd	1110011	CSRRSI
csr		zimm	111	rd	1110011	CSRRCI

Not in 044252

RV32I has 47 instructions total

37 instructions covered in 044252

Single-Cycle RISC-V RV32I Datapath

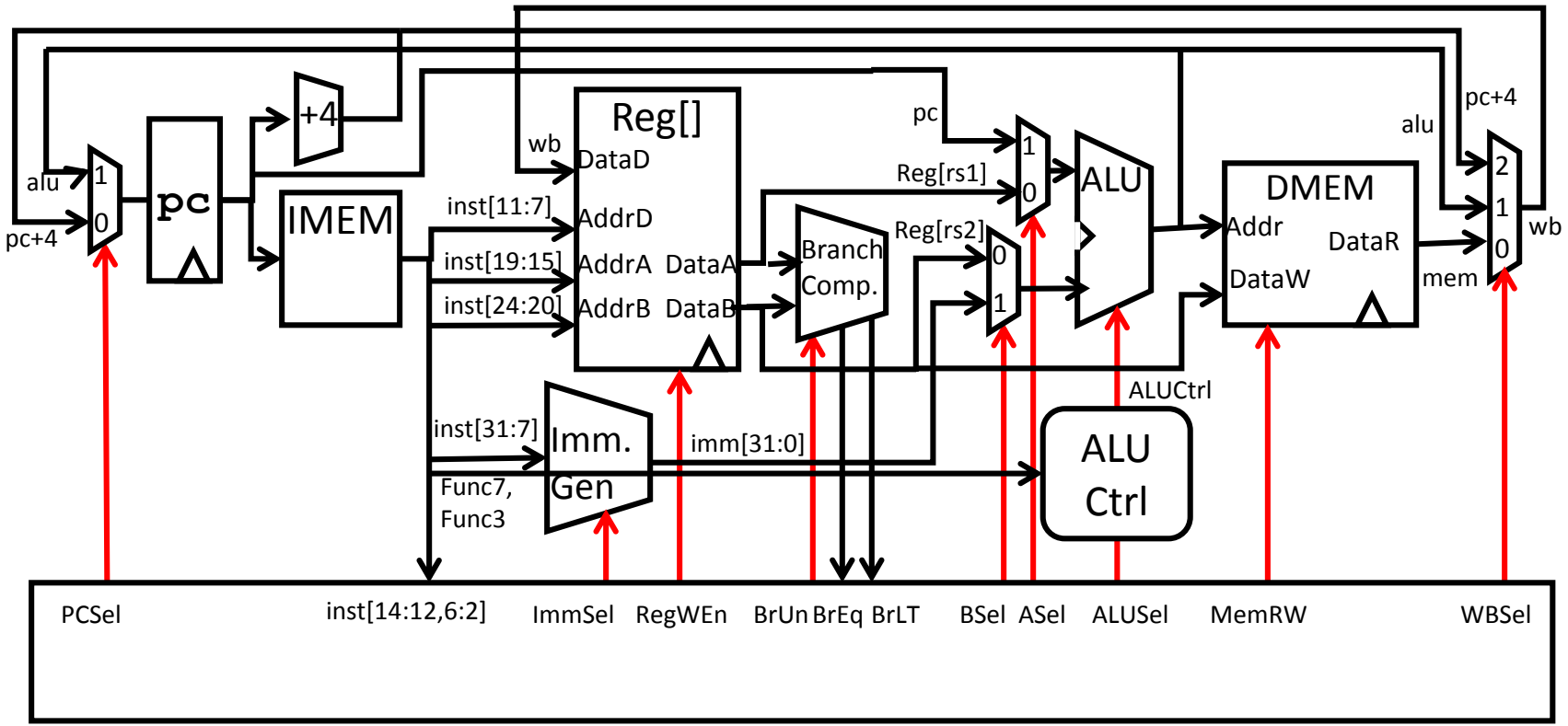

Agenda

- Single-Cycle RISC-V Datapath
- **Controller**
- Instruction Timing
- Performance Measures

Processor

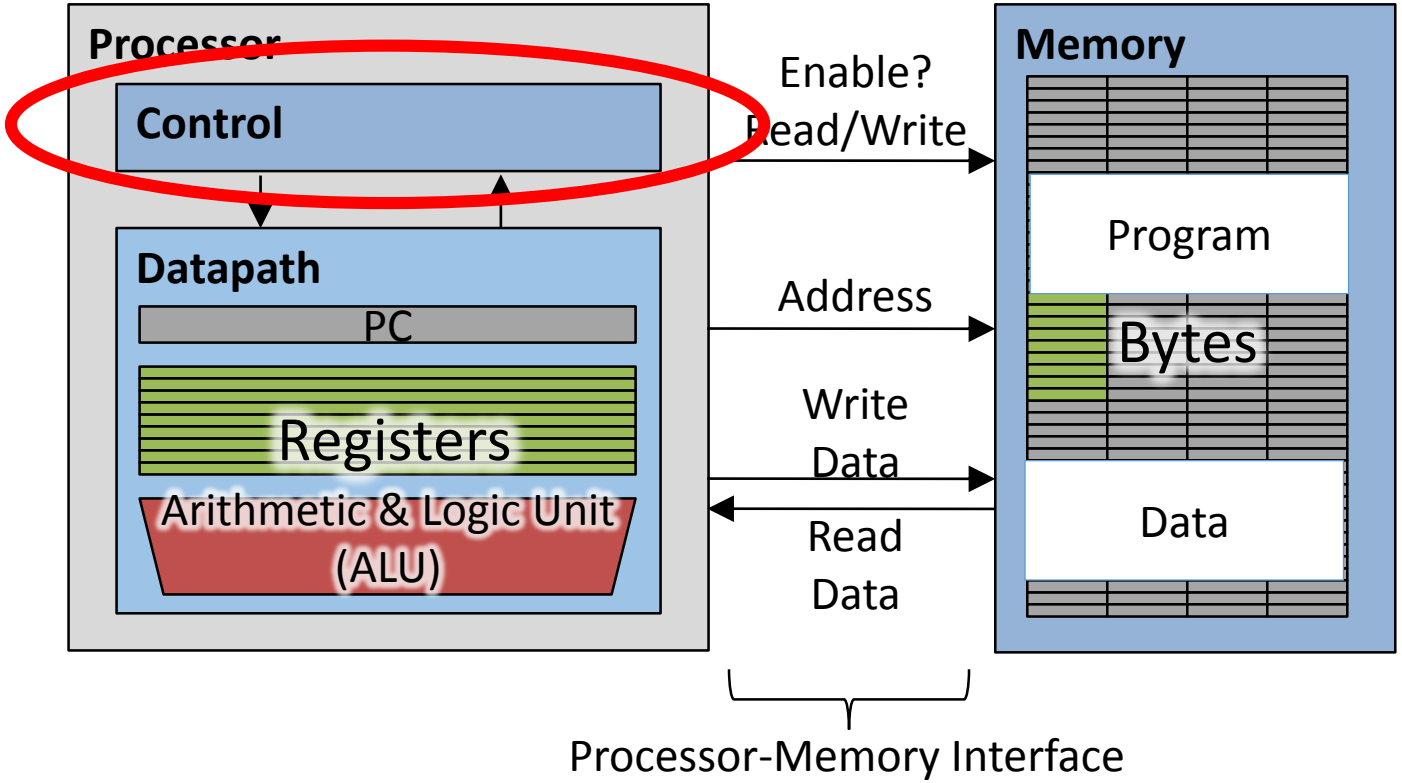
Processor
Control
Datapath
PC
Registers
Arithmetic & Logic Unit
(ALU)
Enable?
Read/Write
Address
Write
Data
Read
Data
Memory
Program
Bytes
Data
Processor-Memory Interface

Single-Cycle RISC-V RV32I Datapath

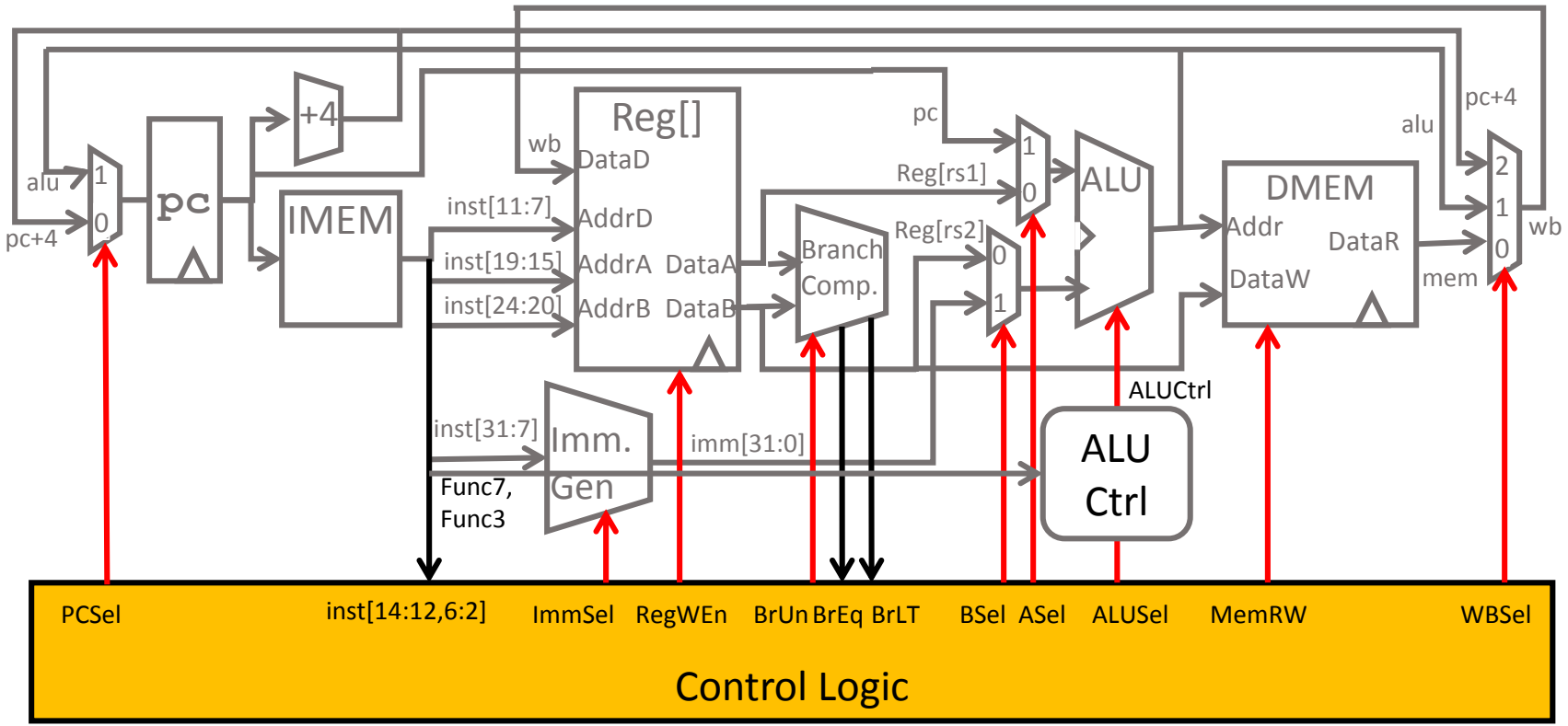

Control Logic Truth Table (incomplete)

Inst[14:12,6:2]	BrEq	BrLT	PCSel	ImmSel	BrUn	ASel	BSel	ALUSel	MemRW	RegWEn	WBSel
R-type	*	*	+4	*	*	Reg	Reg	*R*	Read	1	ALU
I-type	*	*	+4	I	*	Reg	Imm	I	Read	1	ALU
lw	*	*	+4	I	*	Reg	Imm	LS	Read	1	Mem
sw	*	*	+4	S	*	Reg	Imm	LS	Write	0	*
beq	0	*	+4	B	*	PC	Imm	B	Read	0	*
beq	1	*	ALU	B	*	PC	Imm	B	Read	0	*
bne	0	*	ALU	B	*	PC	Imm	B	Read	0	*
bne	1	*	+4	B	*	PC	Imm	B	Read	0	*
blt	*	1	ALU	B	0	PC	Imm	B	Read	0	*
bltu	*	1	ALU	B	1	PC	Imm	B	Read	0	*
jalr	*	*	ALU	I	*	Reg	Imm	I	Read	1	PC+4
jal	*	*	ALU	J	*	PC	Imm	J	Read	1	PC+4
auipc	*	*	+4	U	*	PC	Imm	U	Read	1	ALU

Control Realization Options

- ROM
  - "Read-Only Memory"
  - Regular structure
  - Can be easily reprogrammed
    - fix errors
    - add instructions
  - Popular when designing control logic manually
- Combinational Logic
  - Today, chip designers use logic synthesis tools to convert truth tables to networks of gates

RV32I, a nine-bit ISA!

inst[30] inst[14:12] inst[6:2]

imm[31:12]				rd	0110111	LUI
imm[31:12]				rd	0010111	AUIPC
imm[20|10:1|11|19:12]				rd	1101111	JAL
imm[11:0]		rs1	000	rd	1100111	JALR
imm[12|10:5]	rs2	rs1	000	imm[4:1|11]	1100011	BEQ
imm[12|10:5]	rs2	rs1	001	imm[4:1|11]	1100011	BNE
imm[12|10:5]	rs2	rs1	100	imm[4:1|11]	1100011	BLT
imm[12|10:5]	rs2	rs1	101	imm[4:1|11]	1100011	BGE
imm[12|10:5]	rs2	rs1	110	imm[4:1|11]	1100011	BLTU
imm[12|10:5]	rs2	rs1	111	imm[4:1|11]	1100011	BGEU
imm[11:0]		rs1	000	rd	0000011	LB
imm[11:0]		rs1	001	rd	0000011	LH
imm[11:0]		rs1	010	rd	0000011	LW
imm[11:0]		rs1	100	rd	0000011	LBU
imm[11:0]		rs1	101	rd	0000011	LHU
imm[11:5]	rs2	rs1	000	imm[4:0]	0100011	SB
imm[11:5]	rs2	rs1	001	imm[4:0]	0100011	SH
imm[11:5]	rs2	rs1	010	imm[4:0]	0100011	SW
imm[11:0]		rs1	000	rd	0010011	ADDI
imm[11:0]		rs1	010	rd	0010011	SLTI
imm[11:0]		rs1	011	rd	0010011	SLTIU
imm[11:0]		rs1	100	rd	0010011	XORI
imm[11:0]		rs1	110	rd	0010011	ORI
imm[11:0]		rs1	111	rd	0010011	ANDI

0000000	shamt	rs1	001	rd	0010011	SLLI
0000000	shamt	rs1	101	rd	0010011	SRLI
0100000	shamt	rs1	101	rd	0010011	SRAI
0000000	rs2	rs1	000	rd	0110011	ADD
0100000	rs2	rs1	000	rd	0110011	SUB
0000000	rs2	rs1	001	rd	0110011	SLL
0000000	rs2	rs1	010	rd	0110011	SLT
0000000	rs2	rs1	011	rd	0110011	SLTU
0000000	rs2	rs1	100	rd	0110011	XOR
0000000	rs2	rs1	101	rd	0110011	SRL
0100000	rs2	rs1	101	rd	0110011	SRA
0000000	rs2	rs1	110	rd	0110011	OR
0000000	rs2	rs1	111	rd	0110011	AND
0000	pred	succ	00000	000	00000	0001111	FENCE
0000	0000	0000	00000	001	00000	0001111	FENCE.I
000000000000			00000	000	00000	1110011	ECALL
000000000001			00000	000	00000	1110011	EBREAK
csr			rs1	001	rd	1110011	CSRRW
csr			rs1	010	rd	1110011	CSRRS
csr			rs1	011	rd	1110011	CSRRC
csr			zimm	101	rd	1110011	CSRRWI
csr			zimm	110	rd	1110011	CSRRSI
csr			zimm	111	rd	1110011	CSRRCI

Not in CS61C

Instruction type encoded using only 9 bits

inst[30],inst[14:12] – connected to ALU-Ctrl,

inst[14:12],inst[6:2] – connected to Control Logic

ROM-based Control

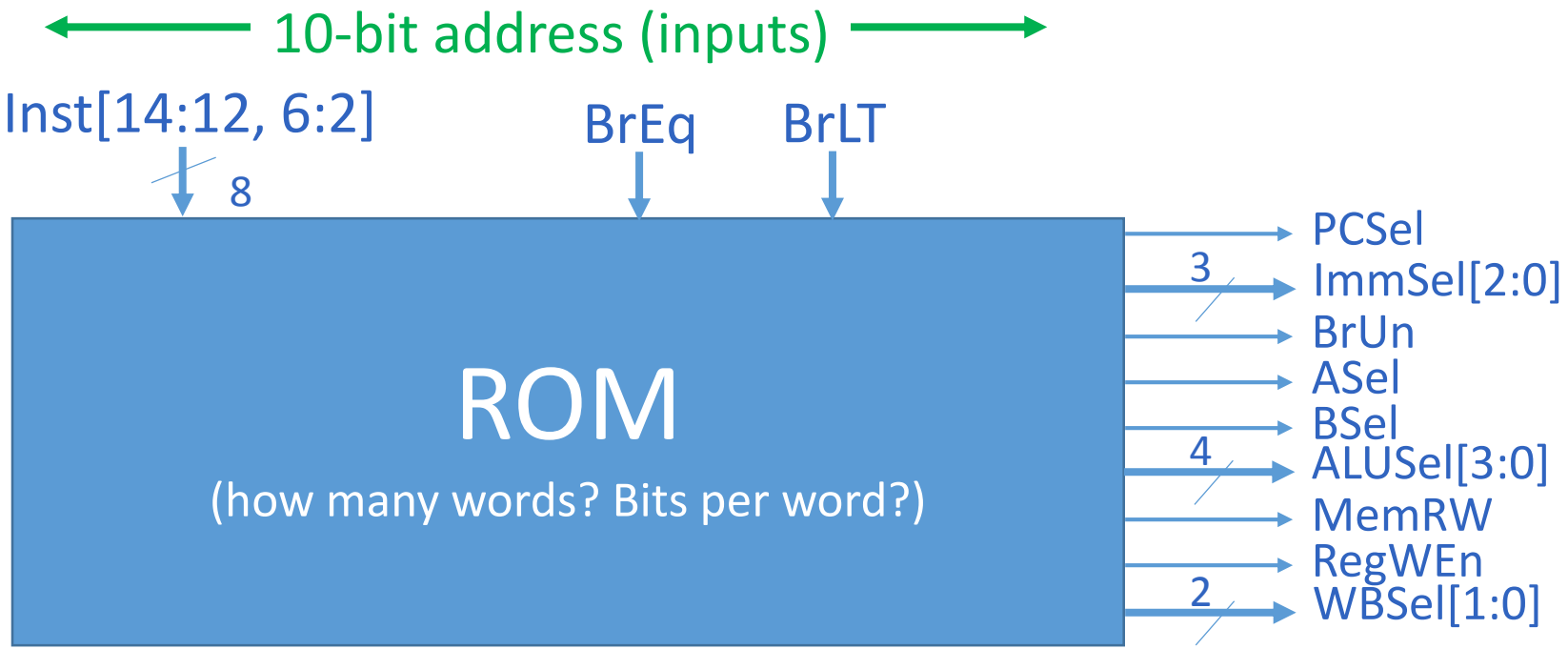

ROM Controller Implementation

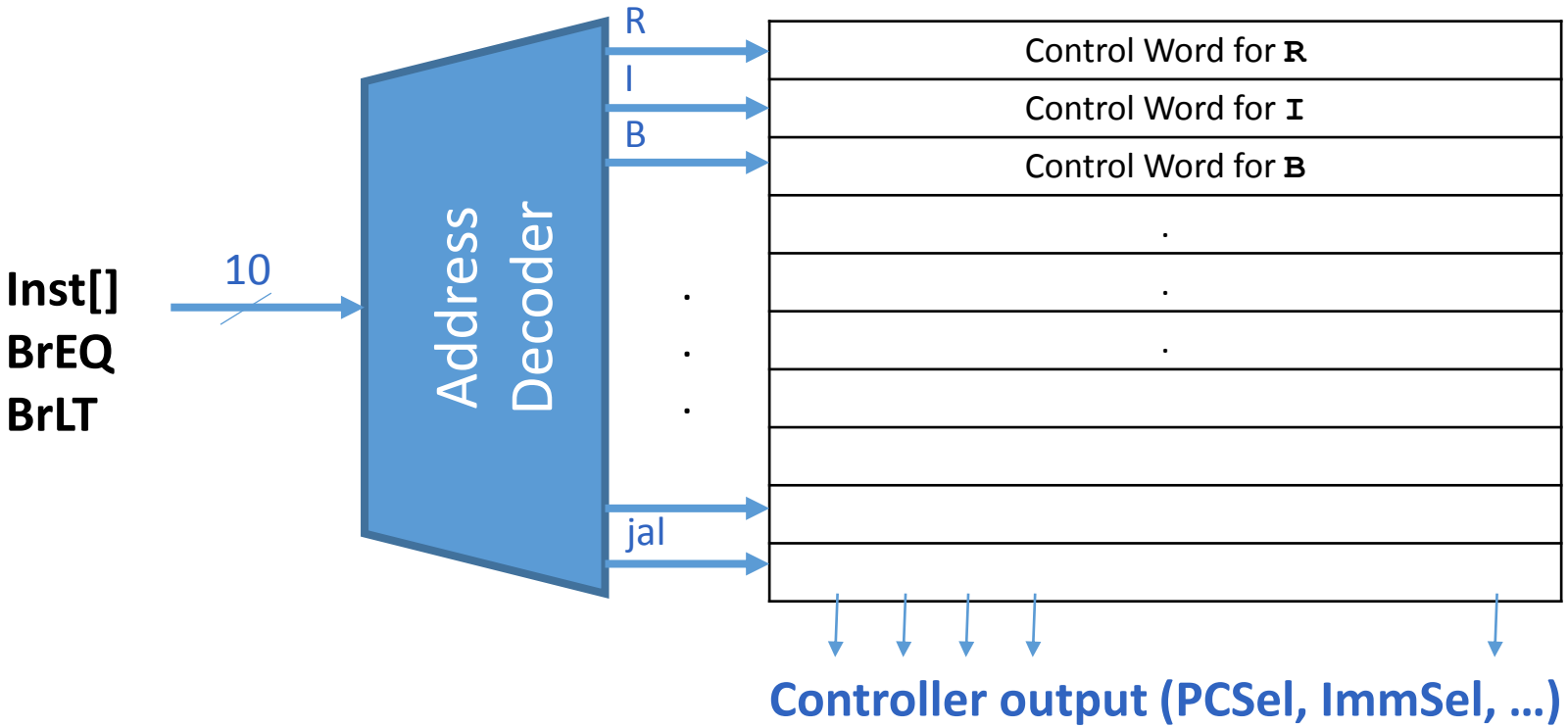

Agenda

- Single-Cycle RISC-V Datapath
- Controller
- **Instruction Timing**
- Performance Measures

Instruction Timing

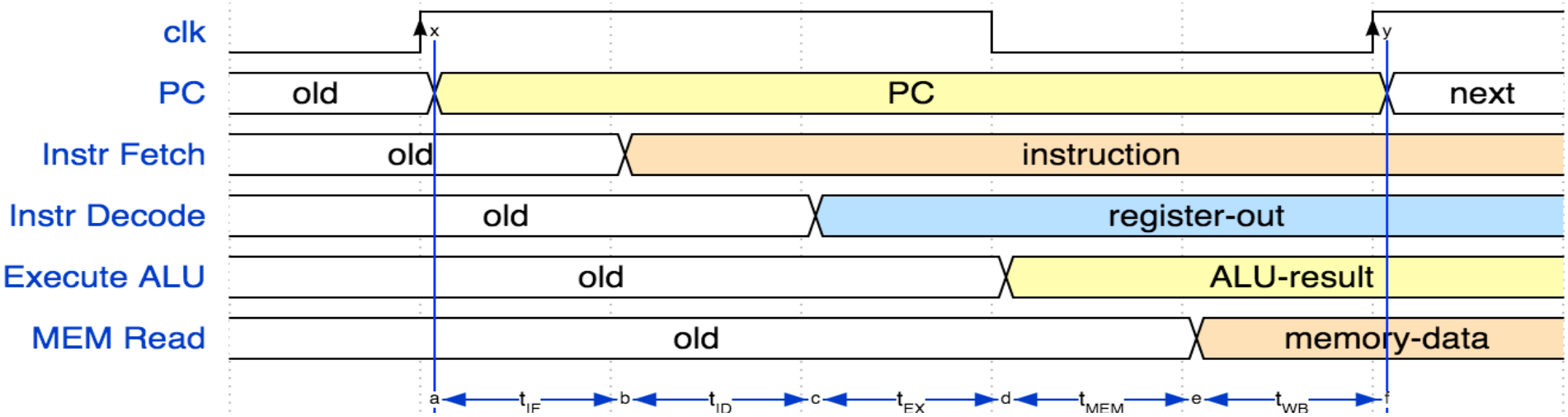

IF	ID	EX	MEM	WB	Total
I-MEM	Reg Read	ALU	D-MEM	Reg W	
200 ps	100 ps	200 ps	200 ps	100 ps	800 ps

Instruction Timing

Instr	IF = 200ps	ID = 100ps	ALU = 200ps	MEM=200ps	WB = 100ps	Total
add	X	X	X		X	600ps
beq	X	X	X			500ps
jal	X	X	X		X	600ps
lw	X	X	X	X	X	800ps
sw	X	X	X	X		700ps

- Maximum clock frequency
  - f_{max} = 1/800ps = 1.25 GHz
- Most blocks idle most of the time
  - E.g. $f_{max,ALU}$ = 1/200ps = 5 GHz!
  - How can we keep ALU busy all the time?
  - 5 billion adds/sec, rather than just 1.25 billion?
  - Idea: Factories use three employee shifts - equipment is always busy!

Agenda

- Single-Cycle RISC-V Datapath
- Controller
- Instruction Timing
- **Performance Measures**

Performance Measures

- "Our" RISC-V executes instructions at 1.25 GHz
  - 1 instruction every 800 ps

- Can we improve its performance?
  - What do we mean with this statement?
  - Not so obvious:
    - Quicker response time, so one job finishes faster?
    - More jobs per unit time (e.g. web server returning pages)?
    - Longer battery life?

Transportation Analogy

	Sports Car	Bus
Passenger Capacity	2	50
Travel Speed	200 mph	50 mph
Gas Mileage	5 mpg	2 mpg

50 Mile trip:

	Sports Car	Bus
Travel Time	15 min	60 min
Time for 100 passengers	750 min	120 min
Gallons per passenger	5 gallons	0.5 gallons

Computer Analogy

Transportation	Computer
Trip Time	Program execution time: e.g. time to update display
Time for 100 passengers	Throughput: e.g. number of server requests handled per hour
Gallons per passenger	Energy per task*: e.g. how many movies you can watch per battery charge or energy bill for datacenter

* Note: power is not a good measure, since low-power CPU might run for a long time to complete one task consuming more energy than faster computer running at higher power for a shorter time

“Iron Law” of Processor Performance

$$\frac{\text{Time}}{\text{Program}} = \frac{\text{Instructions}}{\text{Program}} * \frac{\text{Cycles}}{\text{Instruction}} * \frac{\text{Time}}{\text{Cycle}}$$

Instructions per Program

$$\frac{\text{Time}}{\text{Program}} = \frac{\text{Instructions}}{\text{Program}} * \frac{\text{Cycles}}{\text{Instruction}} * \frac{\text{Time}}{\text{Cycle}}$$

Determined by

- Task
- Algorithm, e.g. $O(N^2)$ vs $O(N)$
- Programming language
- Compiler
- Instruction Set Architecture (ISA)

(Average) Clock cycles per Instruction

$$\frac{\text{Time}}{\text{Program}} = \frac{\text{Instructions}}{\text{Program}} * \frac{\text{Cycles}}{\text{Instruction}} * \frac{\text{Time}}{\text{Cycle}}$$

Determined by

- ISA
- Processor implementation (or *microarchitecture*)
- E.g. for “our” single-cycle RISC-V design, CPI = 1
- Complex instructions (e.g. **`strcpy`**), CPI >> 1
- Superscalar processors, CPI < 1 (next lecture)

Time per Cycle (1/Frequency)

$$\frac{\text{Time}}{\text{Program}} = \frac{\text{Instructions}}{\text{Program}} * \frac{\text{Cycles}}{\text{Instruction}} * \frac{\text{Time}}{\text{Cycle}}$$

Determined by

- Processor microarchitecture (determines critical path through logic gates)
- Technology (e.g. 14nm versus 28nm)
- Power budget (lower voltages reduce transistor speed)

Speed Tradeoff Example

$$\frac{\text{Time}}{\text{Program}} = \frac{\text{Instructions}}{\text{Program}} * \frac{\text{Cycles}}{\text{Instruction}} * \frac{\text{Time}}{\text{Cycle}}$$

- For some task (e.g. image compression) …

	Processor A	Processor B
# Instructions	1 Million	1.5 Million
Average CPI	2.5	1
Clock rate *f*	2.5 GHz	2 GHz
Execution time	1 ms	0.75 ms

Processor B is faster for this task, despite executing more instructions and having a lower clock rate!

Energy per Task

$$\frac{\text{Energy}}{\text{Program}} = \frac{\text{Instructions}}{\text{Program}} * \frac{\text{Energy}}{\text{Instruction}}$$

$$\frac{\text{Energy}}{\text{Program}} \alpha \frac{\text{Instructions}}{\text{Program}} * C \; V^2$$

"Capacitance" depends on technology,
processor features
e.g. # of cores

Supply voltage, e.g. 1V

Want to reduce capacitance and voltage to reduce energy/task

Energy Tradeoff Example

- "Next-generation" processor
  - C (Moore's Law): -15 %
  - Supply voltage, V_{sup}: -15 %
  - Energy consumption: $85\%^3 = 61\%$ (39% lower energy)

- Significantly improved energy efficiency thanks to
  - Moore's Law AND
  - Reduced supply voltage

Energy "Iron Law"

Performance = Power * Energy Efficiency

(Tasks/Second) (Joules/Second) (Tasks/Joule)

- Energy efficiency (e.g., instructions/Joule) is key metric in all computing devices
- For power-constrained systems (e.g., 20MW datacenter), need better energy efficiency to get more performance at same power
- For energy-constrained systems (e.g., 1W phone), need better energy efficiency to prolong battery life

Conclusion

- Universal datapath
  - Capable of executing all RISC-V instructions in one cycle each
  - Not all units (hardware) used by all instructions
- 5 Phases of execution
  - IF, ID, EX, MEM, WB
  - Not all instructions are active in all phases
- Controller specifies how to execute instructions
  - what new instructions can be added with just most control?