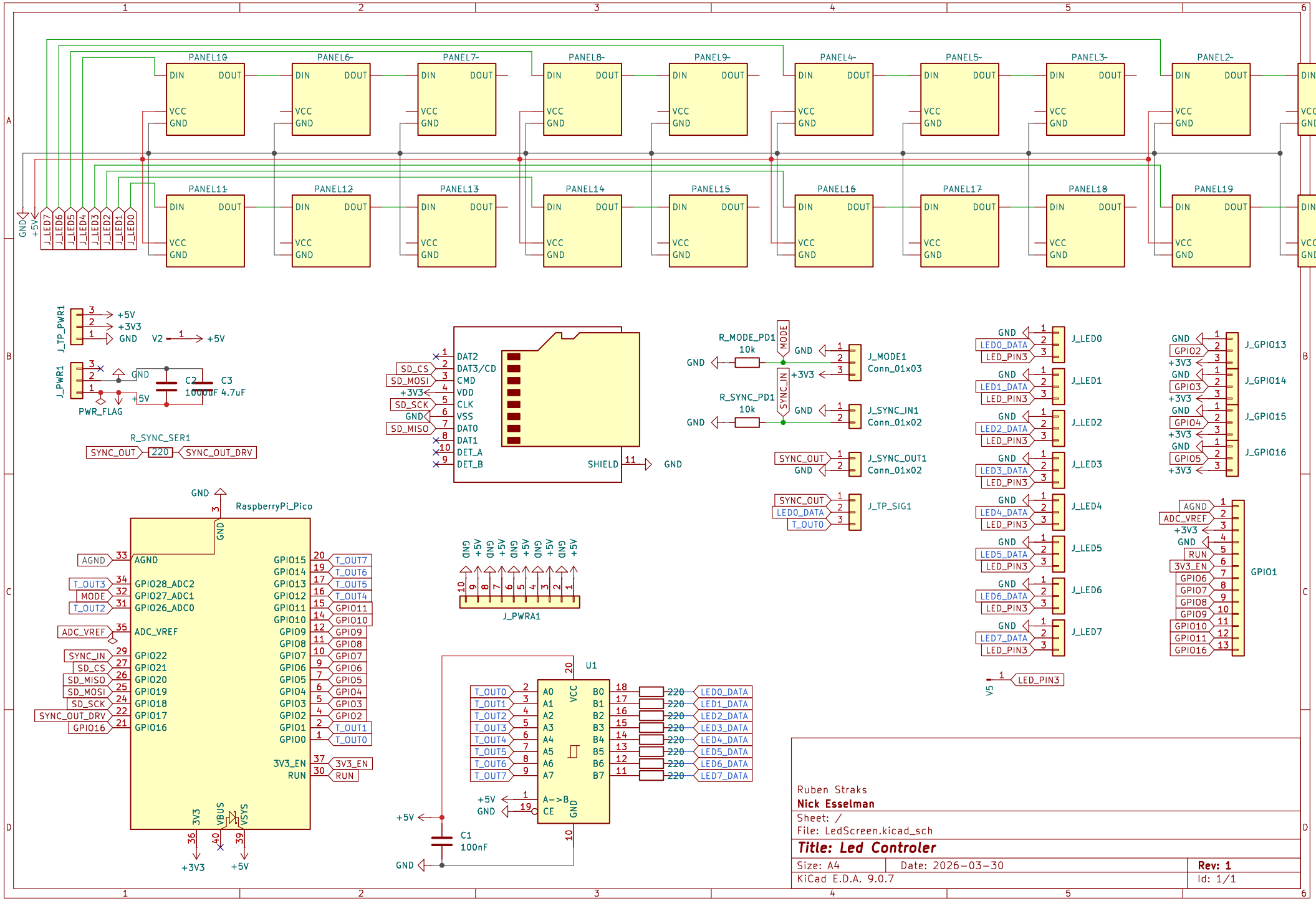

Ruben Straks
Nick Esselman

Sheet: /
File: LedScreen.kicad_sch

Title: Led Controler

Size: A4	Date: 2026-03-30	**Rev: 1**
KiCad E.D.A. 9.0.7		Id: 1/1