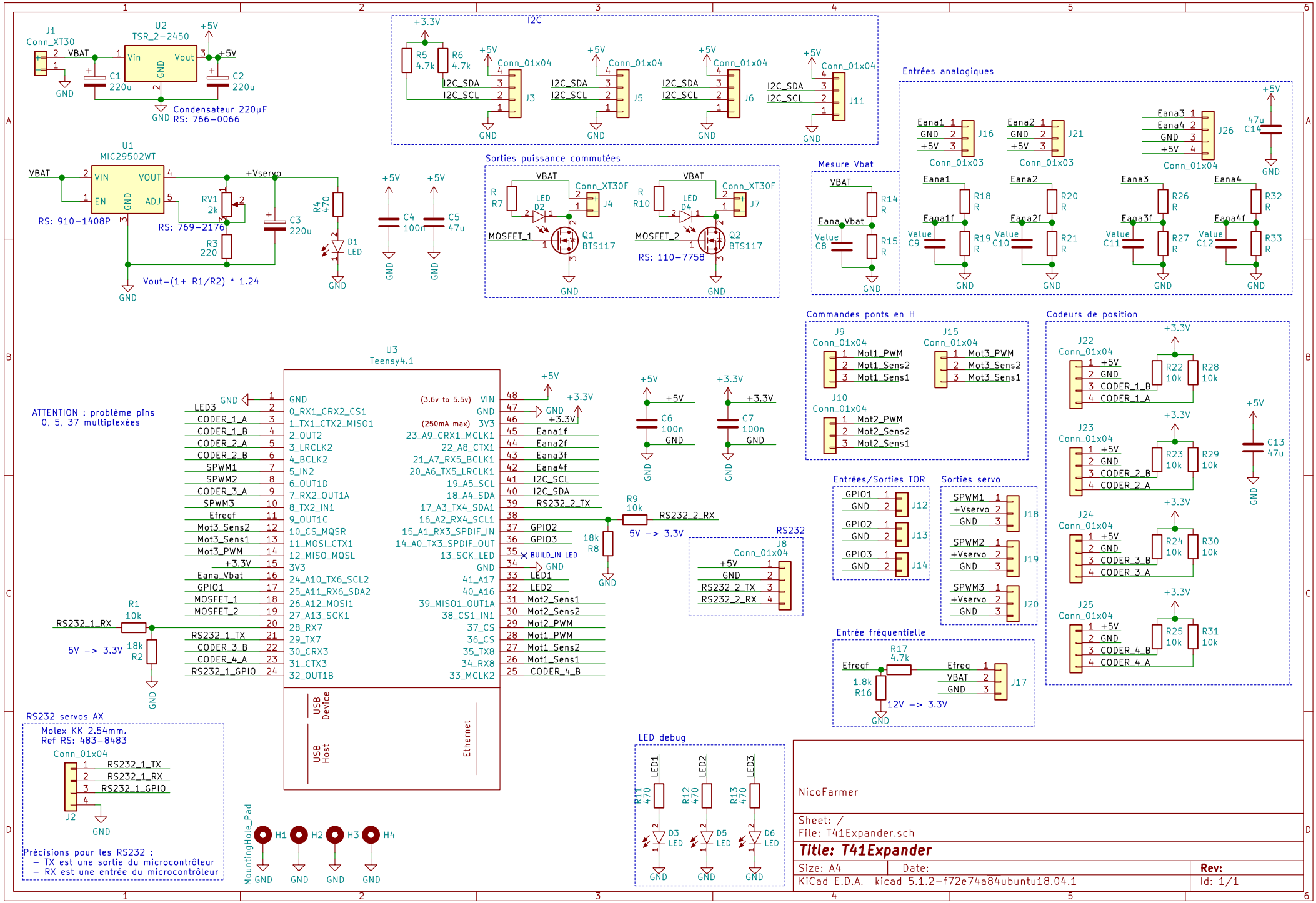
J1
Conn_XT30
VBAT
GND
U2
TSR_2-2450
Vin
Vout
GND
+5V
C1
220u
C2
220u
Condensateur 220µF
RS: 766-0066
U1
MIC29502WT
VIN
VOUT
EN
GND
ADJ
RS: 910-1408P
RS: 769-2176
RV1
2k
R3
220
R4
470
C3
220u
D1
LED
Vout=(1+ R1/R2) * 1.24
C4
100n
C5
47u
I2C
+3.3V
R5
4.7k
R6
4.7k
Conn_01x04
I2C_SDA
I2C_SCL
J3
J5
J6
J11
Sorties puissance commutées
VBAT
R
R7
R10
LED
D2
D4
Conn_XT30F
J4
J7
MOSFET_1
MOSFET_2
Q1
BTS117
Q2
BTS117
RS: 110-7758
Mesure Vbat
R14
R
R15
R
Eana_Vbat
Value
C8
Entrées analogiques
Eana1
Eana2
Eana3
Eana4
J16
J21
J26
Conn_01x03
Conn_01x04
R18
R20
R26
R32
Eana1f
Eana2f
Eana3f
Eana4f
R19
R21
R27
R33
C9
C10
C11
C12
47u
C14
U3
Teensy4.1
ATTENTION : problème pins
0, 5, 37 multiplexées
LED3
CODER_1_A
CODER_1_B
CODER_2_A
CODER_2_B
SPWM1
SPWM2
CODER_3_A
SPWM3
Efreqf
Mot3_Sens2
Mot3_Sens1
Mot3_PWM
+3.3V
Eana_Vbat
GPIO1
MOSFET_1
MOSFET_2
RS232_1_RX
RS232_1_TX
CODER_3_B
CODER_4_A
RS232_1_GPIO
0_RX1_CRX2_CS1
1_TX1_CTX2_MISO1
2_OUT2
3_LRCLK2
4_BCLK2
5_IN2
6_OUT1D
7_RX2_OUT1A
8_TX2_IN1
9_OUT1C
10_CS_MQSR
11_MOSI_CTX1
12_MISO_MQSL
3V3
24_A10_TX6_SCL2
25_A11_RX6_SDA2
26_A12_MOSI1
27_A13_SCK1
28_RX7
29_TX7
30_CRX3
31_CTX3
32_OUT1B
(3.6v to 5.5v) VIN
GND
(250mA max) 3V3
23_A9_CRX1_MCLK1
22_A8_CTX1
21_A7_RX5_BCLK1
20_A6_TX5_LRCLK1
19_A5_SCL
18_A4_SDA
17_A3_TX4_SDA1
16_A2_RX4_SCL1
15_A1_RX3_SPDIF_IN
14_A0_TX3_SPDIF_OUT
13_SCK_LED
GND
41_A17
40_A16
39_MISO1_OUT1A
38_CS1_IN1
37_CS
36_CS
35_TX8
34_RX8
33_MCLK2
Eana1f
Eana2f
Eana3f
Eana4f
I2C_SCL
I2C_SDA
RS232_2_TX
GPIO2
GPIO3
BUILD_IN LED
LED1
LED2
Mot2_Sens1
Mot2_Sens2
Mot2_PWM
Mot1_PWM
Mot1_Sens2
Mot1_Sens1
CODER_4_B
USB Device
USB Host
Ethernet
C6
100n
C7
100n
R9
10k
RS232_2_RX
5V -> 3.3V
18k
R8
R1
10k
RS232_1_RX
5V -> 3.3V
18k
R2
RS232
J8
Conn_01x04
+5V
GND
RS232_2_TX
RS232_2_RX
Commandes ponts en H
J9
J15
J10
Mot1_PWM
Mot1_Sens2
Mot1_Sens1
Mot3_PWM
Mot3_Sens2
Mot3_Sens1
Mot2_PWM
Mot2_Sens2
Mot2_Sens1
Codeurs de position
J22
J23
J24
J25
CODER_1_B
CODER_1_A
CODER_2_B
CODER_2_A
CODER_3_B
CODER_3_A
CODER_4_B
CODER_4_A
R22
R28
R23
R29
R24
R30
R25
R31
C13
47u
Entrées/Sorties TOR
GPIO1
GPIO2
GPIO3
J12
J13
J14
Sorties servo
SPWM1
SPWM2
SPWM3
+Vservo
J18
J19
J20
Entrée fréquentielle
R17
4.7k
Efreqf
1.8k
R16
12V -> 3.3V
Efreq
VBAT
J17
RS232 servos AX
Molex KK 2.54mm.
Ref RS: 483-8483
J2
Précisions pour les RS232 :
– TX est une sortie du microcontrôleur
– RX est une entrée du microcontrôleur
MountingHole_Pad
H1
H2
H3
H4
LED debug
R11
470
R12
470
R13
470
LED1
LED2
LED3
D3
D5
D6
NicoFarmer
Sheet: /
File: T41Expander.sch
Title: T41Expander
Size: A4
Date:
Rev:
KiCad E.D.A. kicad 5.1.2-f72e74a84ubuntu18.04.1
Id: 1/1