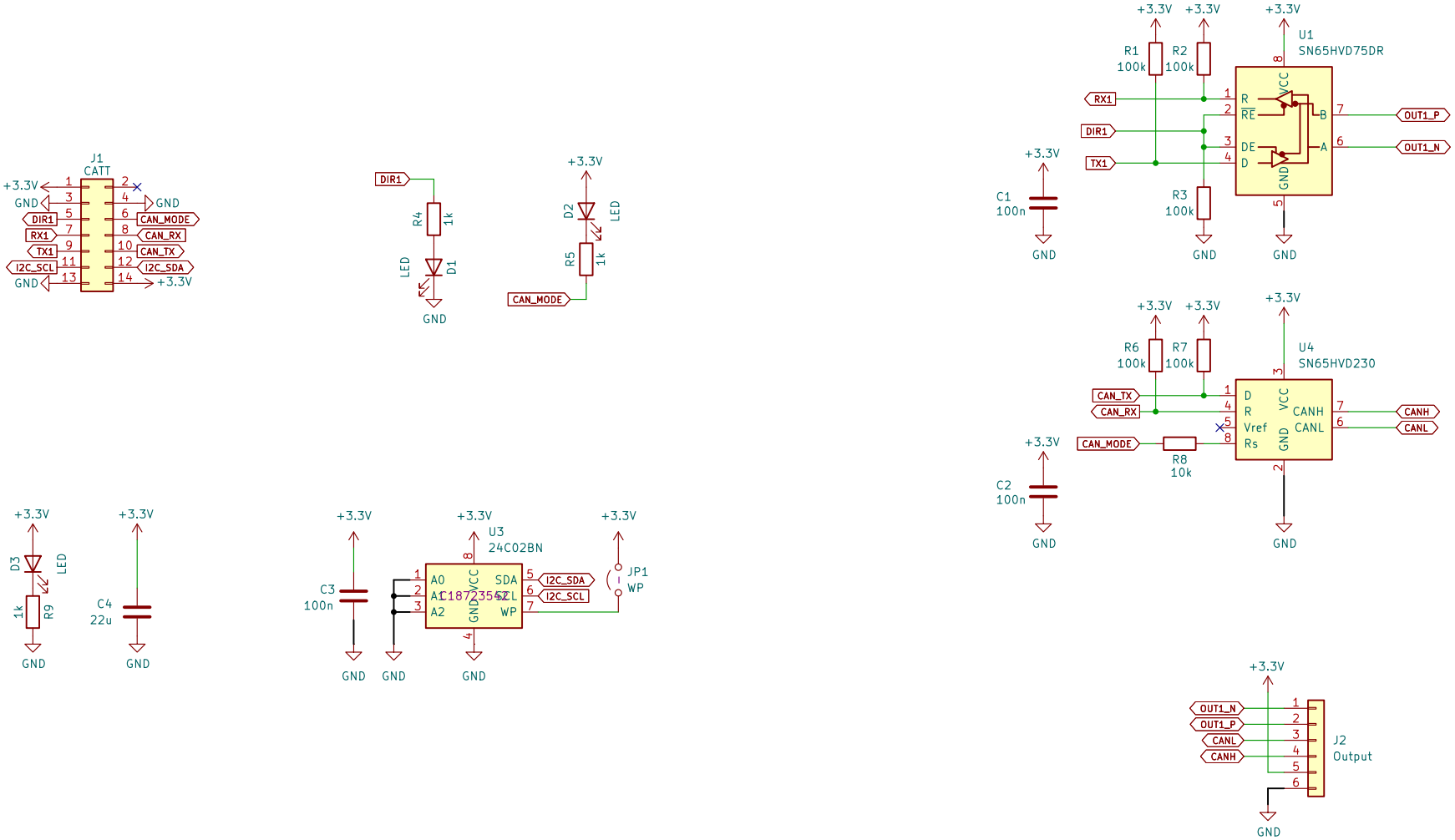

RS-485 and CAN adapter for the CATT connector

Nicolai Electronics

Sheet: /

File: catt_can.kicad_sch

Title: CATT to RS-485 and CAN

Size: A4	Date: 2025-05-18	**Rev: 0.1**
KiCad E.D.A. 9.0.0		Id: 1/1