If desired, isolate (or semi-isolate) all GND nets on this page (GNDA) from the main GND. If done, the GND terminal of C82 should also go to GNDA.

All positions of SW2 should be in the ON/up state.

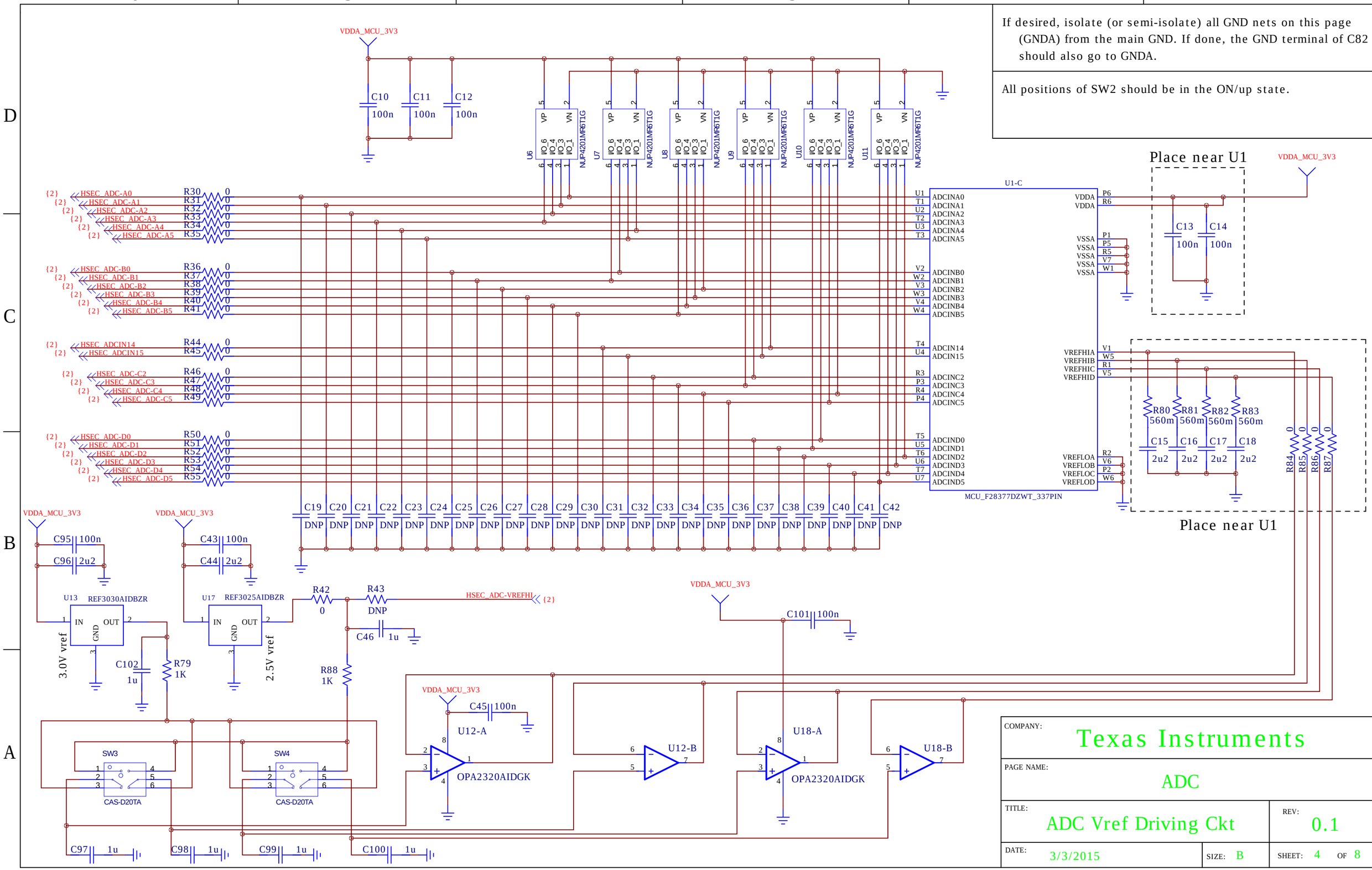

COMPANY: Texas Instruments

PAGE NAME: ADC

TITLE: ADC Vref Driving Ckt

REV: 0.1

DATE: 3/3/2015

SIZE: B

SHEET: 4 OF 8