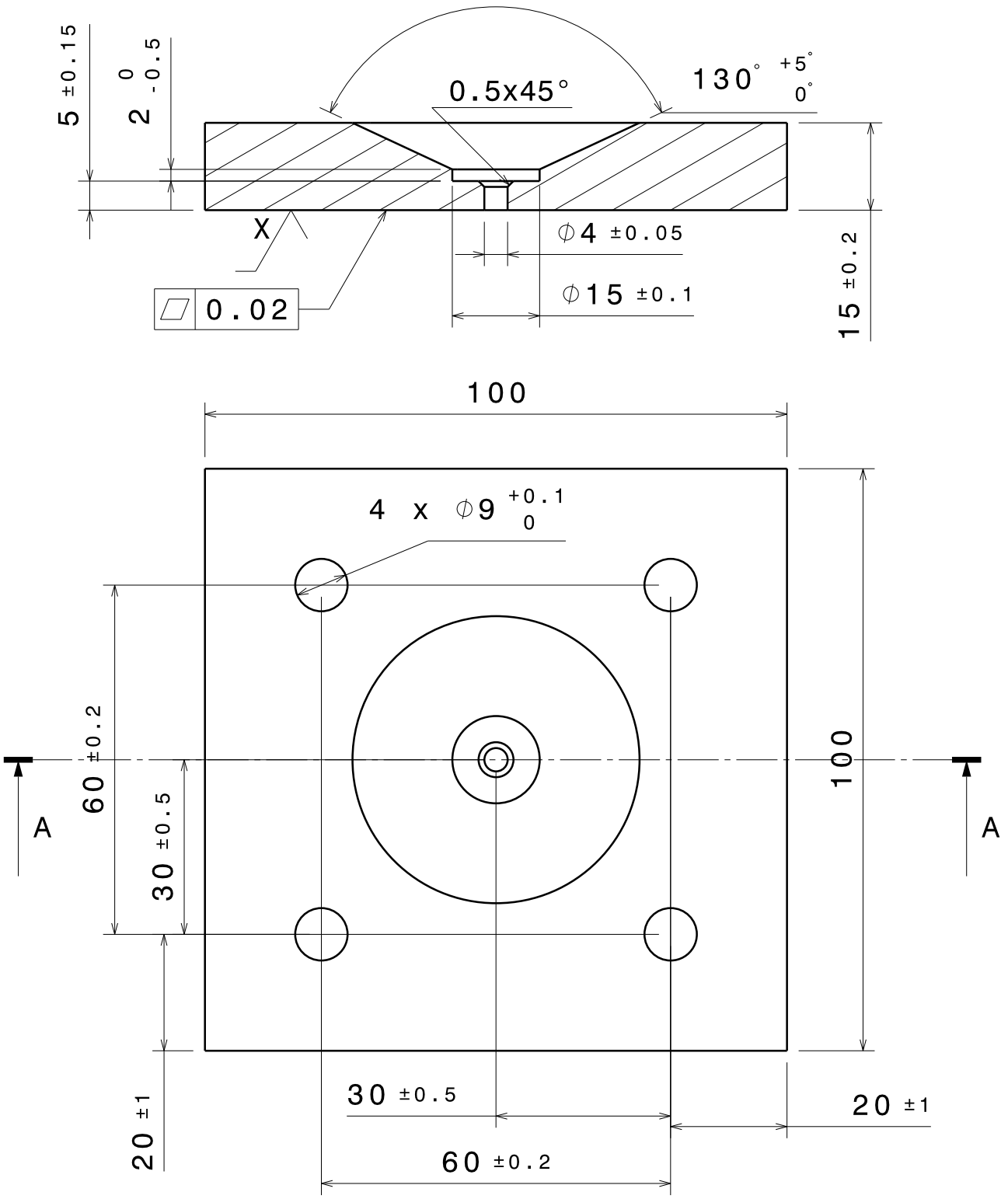

DESIGNED BY: Nicolas Leclerc DATE: 11/06/2018	Upper Die	I	_
CHECKED BY: XXX DATE: XXX		H	_
		G	_
		F	_
SIZE A4	Georgia Tech - Mined RG	E	_
		D	_
SCALE 1:1 / WEIGHT (kg) 0,44	DRAWING NUMBER --- / SHEET 1/1	C	_
		B	_
		A	_

This drawing is our property; it can't be reproduced or communicated without our written agreement.