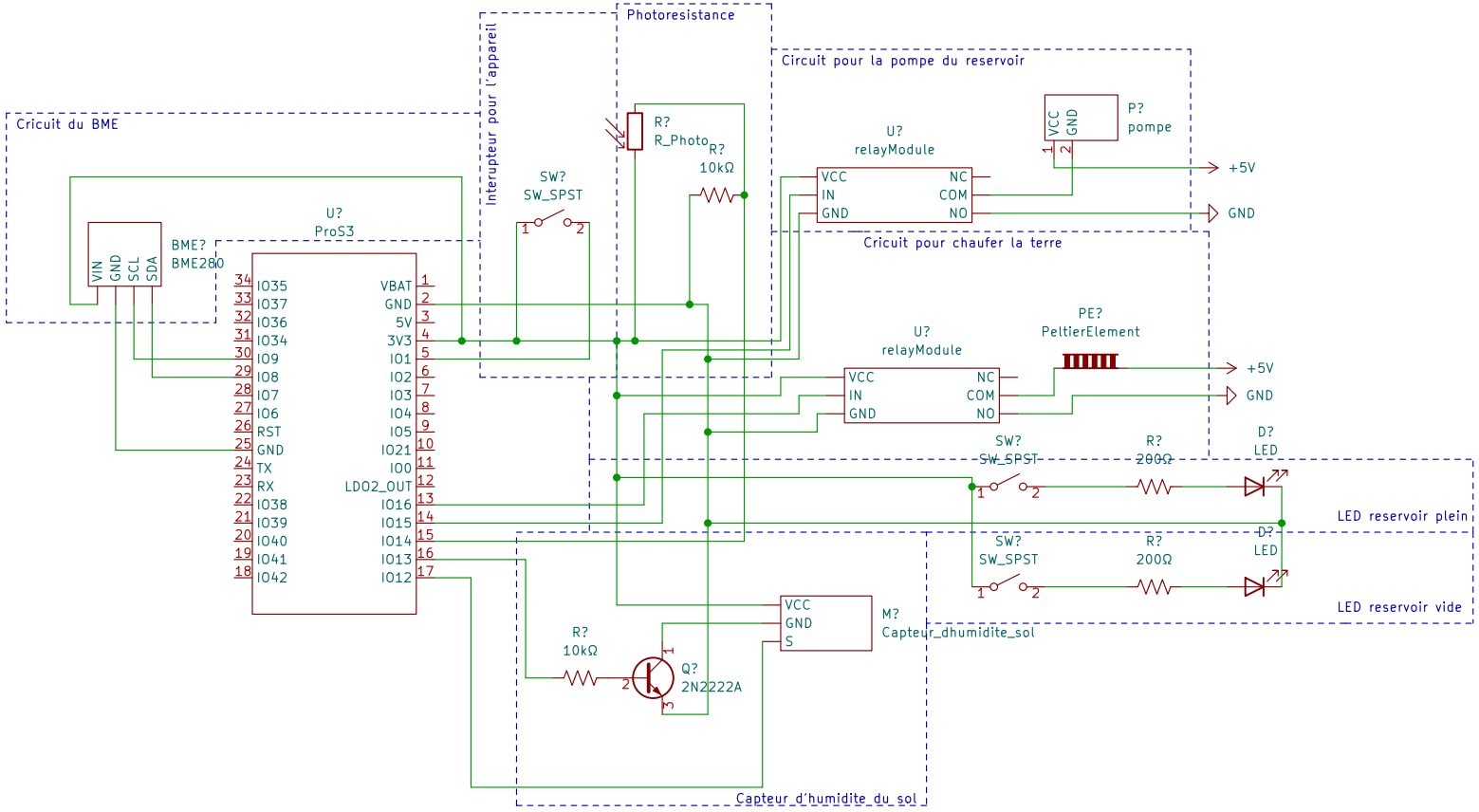

Goutte à Goutte

Sheet: /

File: shema_de_cricuit_Hydraplante.kicad_sch

Title: Hydraplante

Size: A4	Date: 2024-02-17	**Rev: v0.1**
KiCad E.D.A. kicad 6.0.2+dfsg-1		Id: 1/1