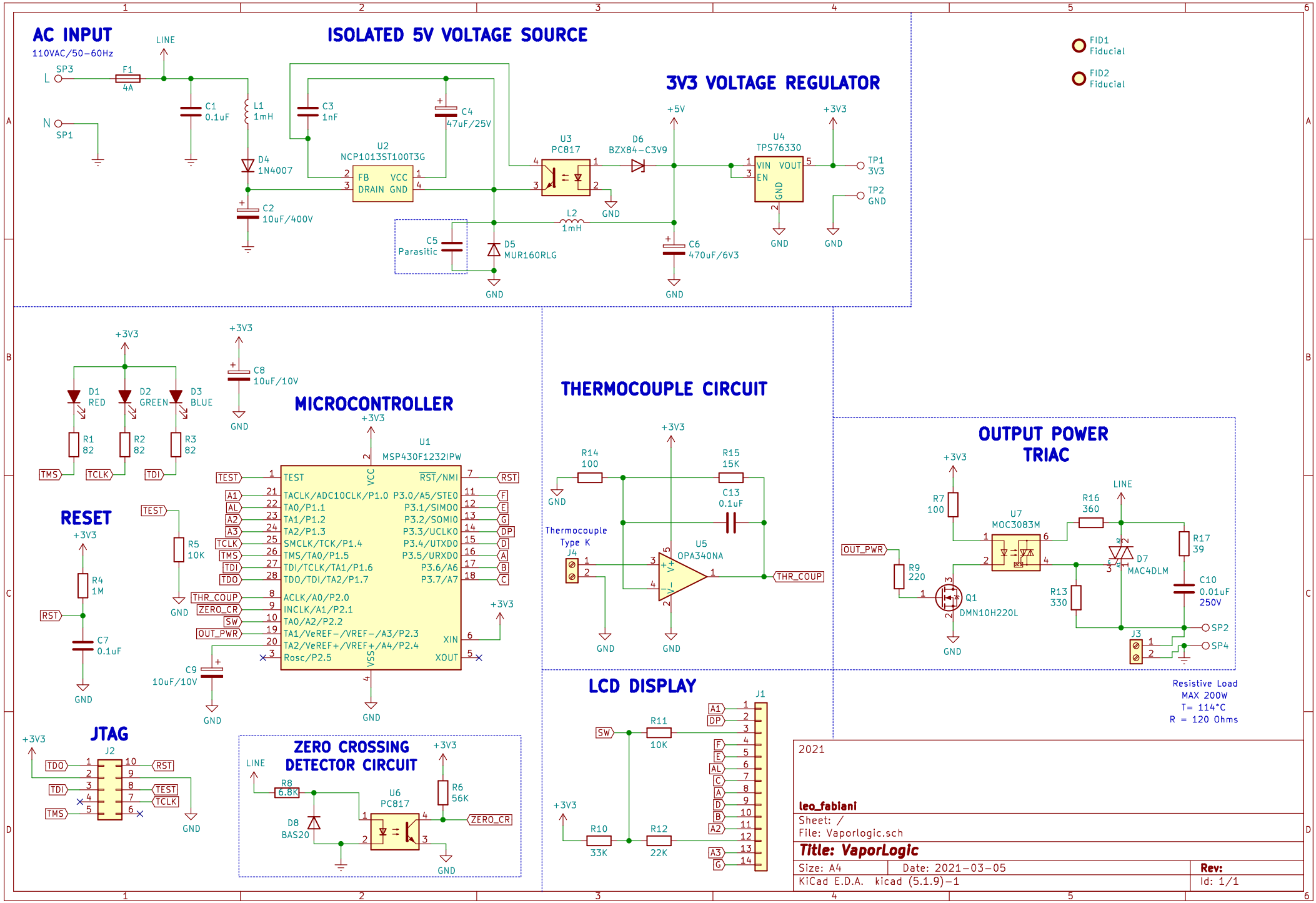
AC INPUT
110VAC/50-60Hz
ISOLATED 5V VOLTAGE SOURCE
3V3 VOLTAGE REGULATOR
MICROCONTROLLER
THERMOCOUPLE CIRCUIT
OUTPUT POWER TRIAC
RESET
JTAG
ZERO CROSSING DETECTOR CIRCUIT
LCD DISPLAY
U1 MSP430F1232IPW
U2 NCP1013ST100T3G
U3 PC817
U4 TPS76330
U5 OPA340NA
U6 PC817
U7 MOC3083M
Q1 DMN10H220L
D5 MUR160RLG
D6 BZX84-C3V9
D7 MAC4DLM
D8 BAS20
Thermocouple Type K
Resistive Load
MAX 200W
T= 114°C
R = 120 Ohms
FID1 Fiducial
FID2 Fiducial
2021
leo_fabiani
Sheet: /
File: Vaporlogic.sch
Title: VaporLogic
Size: A4
Date: 2021-03-05
Rev:
KiCad E.D.A. kicad (5.1.9)-1
Id: 1/1