Hence the total resistance of the transformer referred to the primary winding is given by,

$$R_{1T} = R_1 + (R_2 / K^2) \quad ...(6.10.3)$$

6.10.2 Resistance Transferred to the Secondary Side :

- Consider the expression for the total copper loss P_{cu} given by,

$$P_{cu} = I_1^2 R_1 + I_2^2 R_2 = I_2^2 \left[\frac{I_1^2}{I_2^2} \times R_1 + R_2 \right]$$

- But $(I_1 / I_2) = (N_2 / N_1) = K$, $\quad \therefore \quad P_{cu} = I_2^2 [K^2 R_1 + R_2]$ ...(6.10.4)
- Here $K^2 R_1$ represents the primary resistance transferred from primary to secondary. It is denoted by R_1'.

$$\therefore \quad R_1' = K^2 R_1 \quad ...(6.10.5)$$

Hence the total resistance of the transformer referred to the secondary side is given by,

$$R_{2T} = [K^2 R_1 + R_2] \quad ...(6.10.6)$$

This is shown in Fig. 6.10.2.

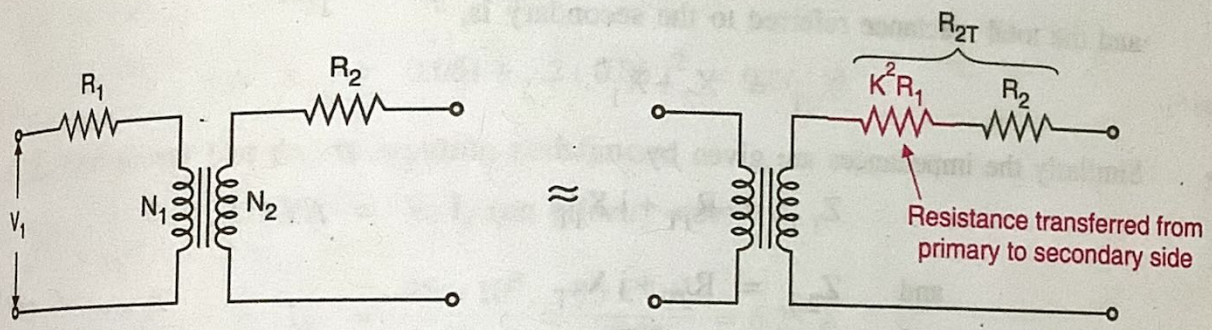

(a) Transformer with individual primary and secondary resistances

(b) Transfer of resistance from primary to secondary

Fig. 6.10.2

Note that whenever the resistance is transferred from the secondary to primary, the secondary winding is represented to be of zero resistance. Same is the case with the primary winding when the transfer takes place from primary to secondary.

6.10.3 Transfer of Reactance from Secondary to Primary :

- The reactance transferred from secondary to primary is denoted by X_2' and it is given by,

$$X_2' = X_2 / K^2 \quad ...(6.10.7)$$

- The equivalent circuit referred to primary is shown in Fig. 6.10.3(a).

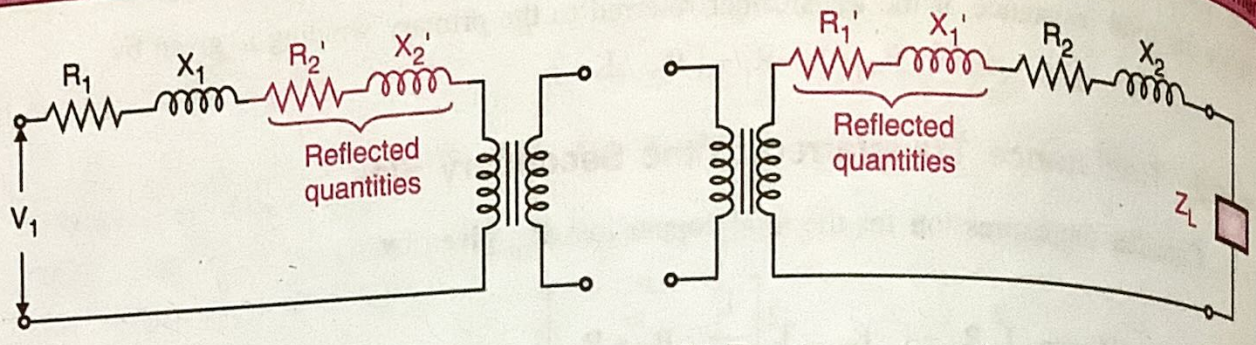

(a) Reactances transferred from secondary to primary

(b) Reactances transferred from primary to secondary

Fig. 6.10.3

6.10.4 Transfer of Reactance from Primary to Secondary :

- The reactance transferred from primary to secondary is denoted by X_1' and it is given by,

$$X_1' = X_1 K^2 \quad \text{...(6.10.8)}$$

- The equivalent circuit referred to secondary is shown in Fig. 6.10.3(b).
- The total reactance referred to primary side is given by,

$$X_{1T} = X_1 + X_2' \quad \text{...(6.10.9)}$$

and the total reactance referred to the secondary is,

$$X_{2T} = X_2 + X_1' \quad \text{...(6.10.10)}$$

- Similarly the impedances are given by,

$$Z_{1T} = R_{1T} + j X_{1T}$$

$$\text{and} \quad Z_{2T} = R_{2T} + j X_{2T} \quad \text{...(6.10.11)}$$

Ex. 6.10.1 : A 25 kVA, 4000 V/200 V; 50 Hz transformer has $R_1 = 3.45\ \Omega$, $R_2 = 0.009\ \Omega$, $X_1 = 5.2\ \Omega$ and $X_2 = 0.051\ \Omega$. Calculate equivalent resistance and equivalent reactance referred to (i) primary (ii) secondary. Also calculate net power lost due to winding resistance.

Soln. :

Given : $kVA = 25$, $\frac{E_1}{E_2} = \frac{4000\ V}{200\ V}$, $f = 50\ Hz$, $R_1 = 3.45\ \Omega$,

$R_2 = 0.009\ \Omega$, $X_1 = 5.2\ \Omega$, $X_2 = 0.051\ \Omega$

To find : (a) Equivalent resistance and equivalent reactance of

i) Primary

ii) Secondary

(b) Net power lost due to winding resistance.

Step 1 : Find K :

$$K = \frac{N_2}{N_1} = \frac{V_2}{V_1} = \frac{200}{4000}$$

$$\therefore \quad K = 0.05$$

Step 2 : Find equivalent resistance and reactance of primary side :

$$R_{1T} = R_1 + \frac{R_2}{K^2}$$

$$\therefore \quad R_{1T} = 3.45 + \frac{0.009}{(0.05)^2} = 7.05\ \Omega$$ ...Ans.

$$X_{1T} = X_1 + \frac{X_2}{K^2} = 5.2 + \frac{0.051}{(0.05)^2} = 25.6\ \Omega$$ ....Ans.

Step 3 : Find equivalent resistance and reactance of secondary side :

$$R_{2T} = R_2 + R_1 K^2$$

$$\therefore \quad R_{2T} = 0.009 + (3.45)(0.05)^2 = 0.0176\ \Omega$$ ...Ans.

$$X_{2T} = X_2 + X_1 K^2$$

$$\therefore \quad X_{2T} = 0.051 + 5.2(0.05)^2 = 0.064\ \Omega$$ ...Ans.

Step 4 : To find power lost due to winding resistance :

$$25\ \text{kVA} = V_1 I_1 \text{ (on primary side)}$$

$$\therefore \quad I_1 = \frac{25 \times 10^3}{V_1} = \frac{25 \times 10^3}{4000} = 6.25\ \text{A}$$

This current passes through $R_{1T} = 7.05\ \Omega$ resistance.

$$\therefore \quad \text{Power lost} = I_1^2 R_{1T} = (6.25)^2 \times 7.05 = 275.4\ \text{W}$$ ...Ans.

6.11 Leakage Reactance and its Effect :

➤➤➤ [Asked in Exam : May 05 !!!]

- The explanation till now has assumed that the flux produced by the primary gets linked entirely with the secondary winding.
- But practically it does not happen. A part of the primary produced flux completes its path through air and will get linked with the primary winding itself as shown in Fig. 6.11.1.
- Similarly a part of the secondary produced flux also couples to the secondary winding through air as shown in Fig. 6.11.1. Such a flux is called as the **leakage flux**.
- The leakage fluxes associated with the two windings are denoted by ϕ_{L1} and ϕ_{L2} respectively.

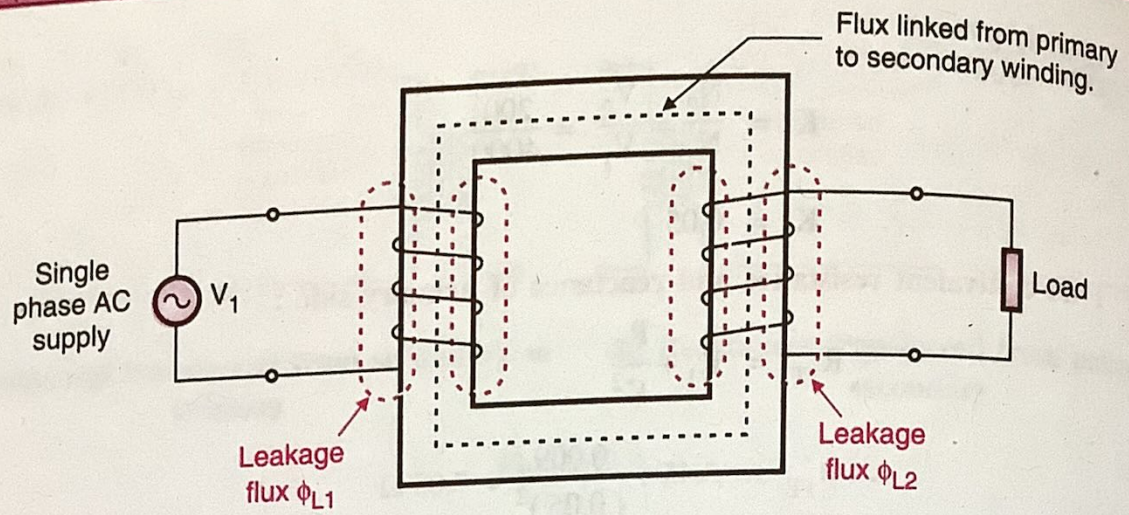

Fig. 6.11.1 : Leakage flux

- In Fig. 6.11.1, ϕ_{L1} is the leakage flux produced by the primary current I_1 and it is in phase with I_1 . Similarly ϕ_{L2} is the leakage flux produced by secondary current I_2 and they are in phase with each other.
- Due to the leakage flux ϕ_{L1} a self induced emf is induced in the primary winding. It is denoted by e_{L1}. And the emf induced in the secondary winding due to leakage flux ϕ_{L2} is given by e_{L2}.
- The primary voltage V_1 will have to overcome the induced emf e_{L1} to produce E_1 and the induced secondary voltage E_2 will have to overcome the induced voltage e_{L2} due to leakage flux in order to produce V_2.
- Thus the self induced emfs e_{L1} and e_{L2} due to the leakage fluxes are considered as the voltage drops across the fictitious reactances placed in series with the primary and secondary windings. These reactances are called as the leakage reactances and they are as shown in Fig. 6.11.2.

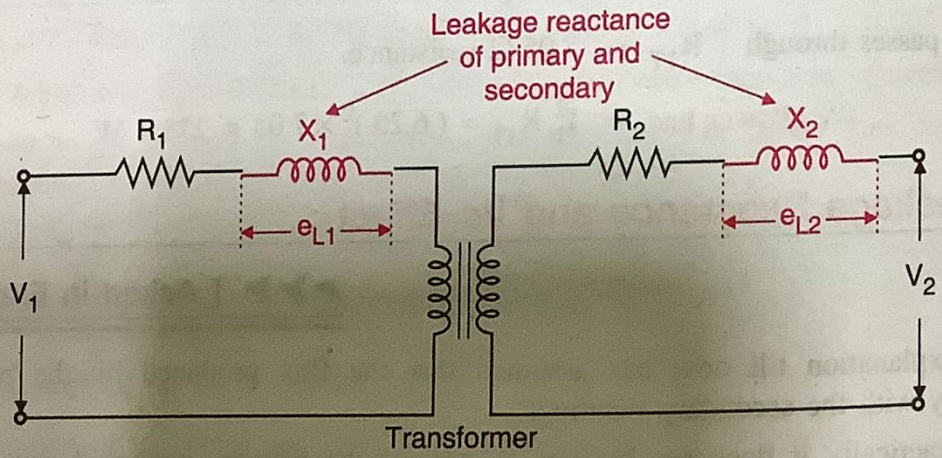

Fig. 6.11.2 : Leakage reactances

$\therefore$ X_1 = Leakage reactance of the primary

X_2 = Leakage reactance of the secondary.

The primary impedance $Z_1 = R_1 + j X_1$

and secondary impedance $Z_2 = R_2 + j X_2$ ... (6.11.1)

- The transfer of impedances takes place on the same lines as that of the resistors. The transfer of impedances can take place from primary to secondary or vice versa.

6.12 Equivalent Circuit of Transformer :

➤➤➤ [Asked in Exam : May 03 !!!]

- The equivalent circuit of a transformer is as shown in Fig. 6.12.1. It consists of fixed and variable resistances, fixed and variable reactances for primary and secondary sides of the transformer as well as the no load components.

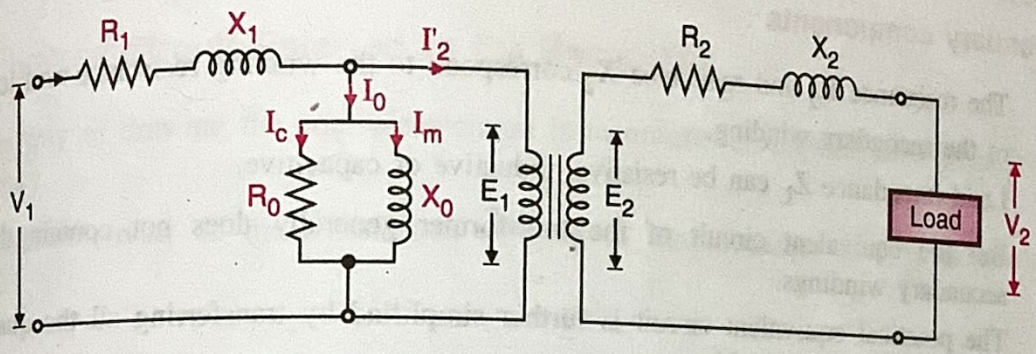

Fig. 6.12.1 : Equivalent circuit of transformer

- The equivalent circuit of Fig. 6.12.1 can be divided into three parts as follows :
  1. No load equivalent circuit.
  2. Equivalent circuit of primary.
  3. Equivalent circuit of secondary.

No load equivalent circuit :

- The no load equivalent circuit of the transformer consists of the components R_0 and X_0.
- The no load primary current I_0 has two components namely I_m and I_c.

$$I_m = \text{Magnetizing component} = I_0 \sin \phi_0$$

$$\text{and} \quad I_c = \text{Active component} = I_0 \cos \phi_0$$

- The magnetizing current I_m produces the flux and it is assumed to be flowing through the no load reactance X_0.
- The active component I_c supplies for the no load losses and it is assumed to be flowing through the no load resistance R_0.
- The components R_0 and X_0 are connected in parallel with each other so that the total current through them is equal to the no load primary current I_0.
- The parallel combination of R_0 and X_0 is also called as exciting circuit.
- From the equivalent circuit we can write that,

$$R_0 = V_1 / I_c \quad \text{and} \quad X_0 = V_1 / I_m \qquad ...(6.12.1)$$

Primary components :

- The resistance R_1 and reactance X_1 correspond to the winding resistance (dc resistance) and leakage reactance of the primary winding.
- The total current I_1 on the primary side is equal to the sum of I_0 and I_2' where I_2' is the load component.
- $I_2' = I_2 / K$ is the additional primary current which flows due to the load connected on the secondary side of the transformer.
- This total current I_1 is given by,

$$\overline{I_1} = \overline{I_0} + \overline{I_2'} \quad \text{...(6.12.2)}$$

Secondary components :

- The resistance R_2 and reactance X_2 correspond to the winding resistance and leakage reactance of the secondary winding.
- Load impedance Z_L can be resistive, inductive or capacitive.
- But the equivalent circuit of the transformer generally does not contain the primary and secondary windings.
- The practical equivalent circuit is further simplified by transferring all the quantities to either primary or secondary side.
- This is done in order to make the transformer calculations easy.
- We can drawn the equivalent circuits in the following two ways,
  1. Equivalent circuit referred to primary side.
  2. Equivalent circuit referred to secondary side.

  Let us discuss them one by one.

6.12.1 Equivalent Circuit Referred to Primary Side :

- All the components on the secondary side of the transformer are transferred to the primary side as shown in Fig. 6.12.2.
- This circuit shows the equivalent circuit referred to the primary side.

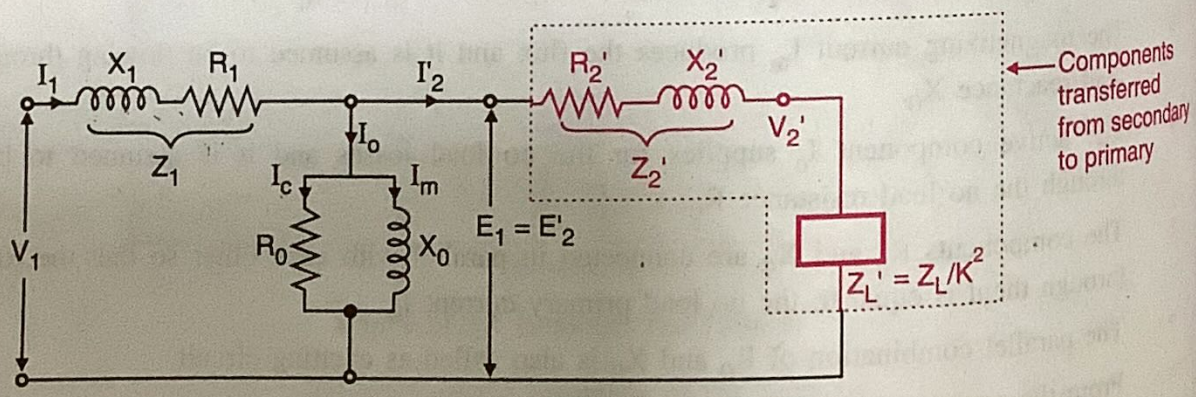

Fig. 6.12.2 : Equivalent circuit of the transformer referred to the primary

- R_2', X_2' and Z_L' are the values of R_2, X_2 and Z_L respectively when transferred to the primary side. The values of these components are obtained as follows :

$$R_2' = \frac{R_2}{K^2},\ X_2' = \frac{X_2}{K^2} \quad \text{and} \quad Z_L' = \frac{Z_L}{K^2} \qquad ...(6.12.3)$$

where $K = N_2 / N_1$

- The voltage E_2 and current I_2 also are transferred to the primary side as E_2' and I_2' respectively. The expressions for E_2' and I_2' are as follows :

$$E_2' = \frac{E_2}{K} \quad \text{and} \quad I_2' = KI_2 \qquad ...(6.12.4)$$

6.12.2 Equivalent Circuit Referred to the Secondary :

- The other way of drawing the equivalent circuit is to transfer all the quantities from primary to secondary.
- The equivalent circuit of the transformer referred to the secondary side is as shown in Fig. 6.12.3.

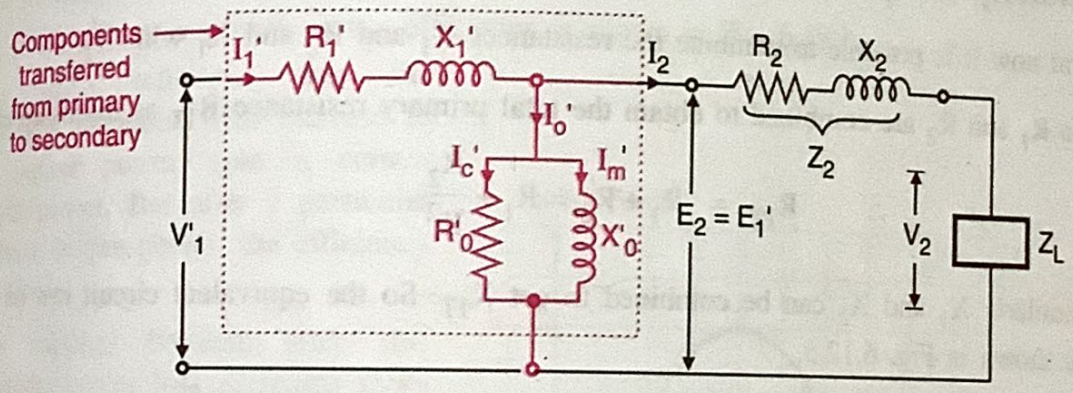

Fig. 6.12.3 : Equivalent circuit of transformer referred to the secondary

- The components R_1', X_1', R_0' and X_0' are the components which are transferred from primary to secondary side.
- The transfer expressions for these components are as follows :

$$R_1' = K^2 R_1,\ X_1' = K^2 X_1,\ Z_1' = K^2 Z_1 \qquad ...(6.12.5)$$

$$R_0' = K^2 R_0,\ X_0' = K^2 X_0' \qquad ...(6.12.6)$$

- The primary voltages and currents such as I_1, V_1, I_0, E_1 also get transferred to the secondary side as I_1', V_1', I_0' and E_1' respectively, and their expressions are as follows.

$$I_1' = \frac{I_1}{K},\ E_1' = KE_1,\ I_0' = \frac{I_0}{K} \qquad ...(6.12.7)$$

where $K = N_2 / N_1$

6.12.3 Approximate Equivalent Circuit :

- The approximate equivalent circuit can be obtained by shifting the exciting circuit (containing R_0 and X_0) to the left of R_1 and X_1 as shown in Fig. 6.12.4.

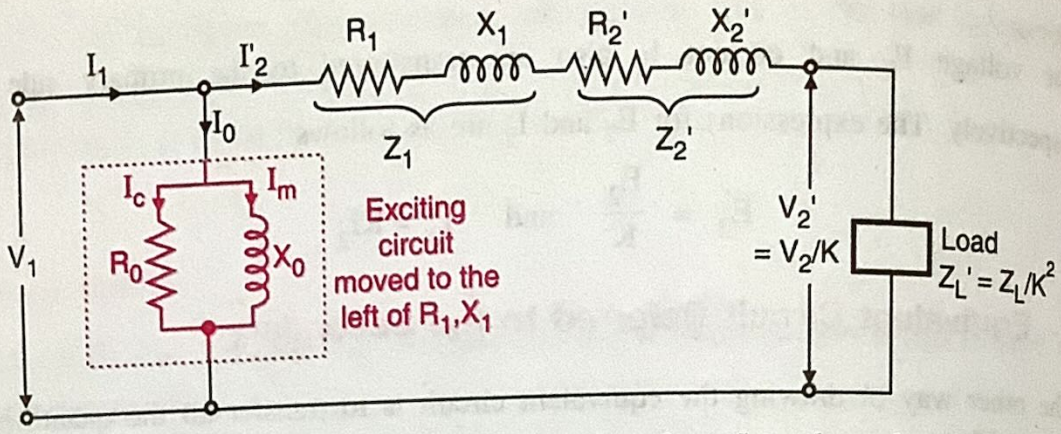

Fig. 6.12.4 : Approximate equivalent circuit referred to the primary

- Due to shifting of $R_0 X_0$ to the left of R_1 and X_1 will create an error in the voltage drop across R_1 and X_1. Hence this circuit is called as the approximate circuit.
- But now it is possible to combine the resistances R_1 and R_2' and X_1 with X_2'.
- So R_1 and R_2' are combined to obtain the total primary resistance R_{1T} as discussed earlier.

$$\therefore \quad R_{1T} = R_1 + R_2' = R_1 + \frac{R_2}{K^2} \qquad ...(6.12.8)$$

- Similarly X_1 and X_2' can be combined to get X_{1T}. So the equivalent circuit can be simplified as shown in Fig. 6.12.5.

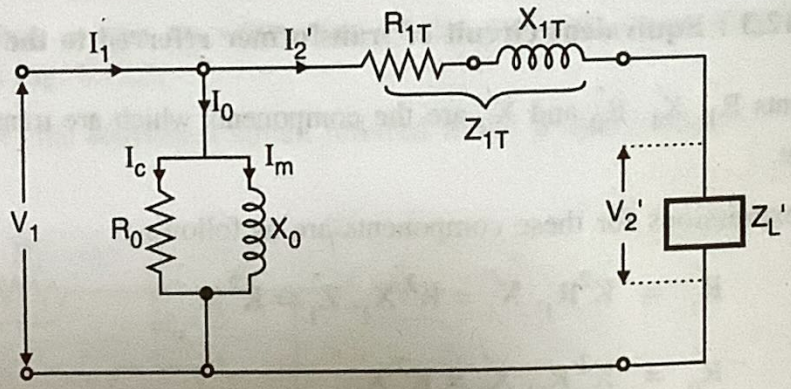

Fig. 6.12.5 : Simplified equivalent circuit referred to primary

$$\text{where} \quad X_{1T} = X_1 + X_2' = X_1 + \frac{X_2}{K^2} \qquad ...(6.12.9)$$

- Therefore the total impedance is given by,

$$Z_{1T} = R_{1T} + jX_{1T} \qquad ...(6.12.10)$$

- The other components in Fig. 6.12.5 are as follows.

$$R_0 = \frac{V_1}{I_c} \quad \text{and} \quad X_0 = \frac{V_1}{I_m} \qquad ...(6.12.11)$$

$$\text{And} \quad I_c = I_0 \cos \phi_0 \text{ and } I_m = I_0 \sin \phi_0 \qquad ...(6.12.12)$$

6.13 Definitions of Efficiency and Regulation :

6.13.1 Efficiency (η) :

- The efficiency of a transformer is defined as the ratio of output power to input power. It is denoted by η.

$$\therefore \text{ Efficiency } \eta = \frac{\text{Output power}}{\text{Input power}} = \frac{\text{Output power}}{\text{Output power} + \text{Losses}}$$

- Since the output power is always less than the input power due to losses in the transformer, the efficiency of the practical transformer is always between 0 and 1 i.e. 0 % and 100 % but it can never be 1 or 100 %.
- The efficiency of an ideal transformer will be equal to 1 or 100 %, because the losses in the ideal transformer will be zero.
- The graph of output power versus efficiency is shown in Fig. 6.13.1.
- Fig. 6.13.1 tells us that the efficiency increases with increase in the output power upto a certain output power. But after a particular value of output power, the efficiency decreases.
- This happens because after this point the power loss increases more rapidly. The power loss increases more rapidly because it changes in proportion with the square of load current. Hence the efficiency decreases after reaching the maximum value.

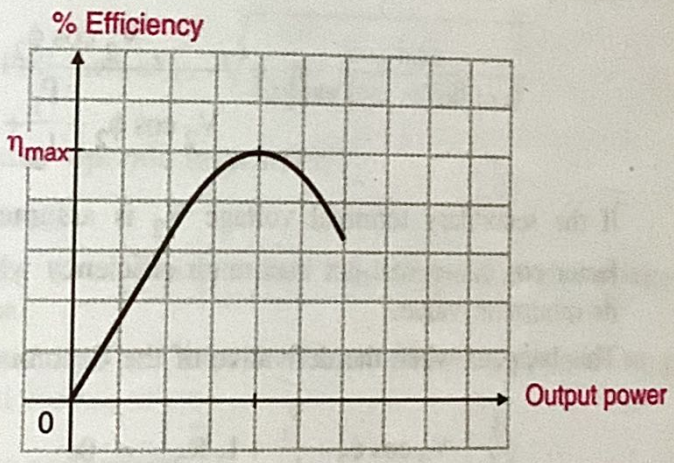

Fig. 6.13.1 : Output power versus efficiency

- The output power at full load = $V_2 I_2 \cos \phi_2$ watt. ...(6.13.1)
- This can be expressed in terms of kVA rating as :

$$\text{Output power at full load} = (k\,V\,A \times \cos \phi_2 \times 1000) \text{ watt} \qquad .... (6.13.2)$$

- If the copper loss is denoted by P_{cu} and iron loss by P_i, then the efficiency is given by :

$$\text{Full load efficiency } \eta_{FL} = \frac{k\,V\,A \times \cos \phi_2 \times 1000}{(k\,V\,A \times \cos \phi_2 \times 1000) + P_i + P_{cu}} \qquad ...(6.13.3)$$

- In this expression, the value of kVA and the copper loss P_{cu} will change with change in load.
- The iron loss will however remain constant. The copper loss P_{cu} will change in square proportion with the load. Hence for half load condition the efficiency is given by,

$$\text{Half load efficiency} \quad \eta_{HL} = \frac{0.5\,kVA \times \cos\phi_2 \times 1000}{(0.5\,kVA \times \cos\phi_2 \times 1000) \times P_i + (0.5)^2 P_{cu}}$$

- The transformer is a static device with no moving parts. Hence the losses due to friction and windage are completely absent. The efficiency of the transformer can be atleast equal to 90 %.

6.13.2 Condition for Maximum Efficiency :

- Let us consider the secondary side of the transformer to obtain the efficiency.
- So we will consider the copper losses taking place on the secondary side only. Let $\overline{R}_2$ represent the total resistance on the secondary side.

$\therefore$ Copper loss on secondary side $= I_2^2 \overline{R}_2$

- Substituting this into Equation (6.13.3) we get,

$$\eta = \frac{V_2 I_2 \cos\phi_2}{V_2 I_2 \cos\phi_2 + I_2^2 \overline{R}_2 + P_i} \quad \text{...(6.13.4)}$$

Where P_i = iron losses.

- Divide the numerator and denominator by I_2 we get,

$$\eta = \frac{V_2 \cos\phi_2}{V_2 \cos\phi_2 + \frac{P_i}{I_2} + I_2 \overline{R}_2} \quad \text{...(6.13.5)}$$

- If the secondary terminal voltage V_2 is assumed to be constant, then for a constant power factor $\cos\phi$, we will get maximum efficiency when the denominator of Equation (6.13.5) is at its minimum value.
- This happens when the derivative of the denominator with respect to I_2 is minimum.

$$\therefore \frac{d}{dI_2}\left[V_2 \cos\phi_2 + \frac{P_i}{I_2} + I_2 \overline{R}_2\right] = 0$$

$$\therefore -\frac{P_i}{I_2^2} + \overline{R}_2 = 0$$

$$\therefore -P_i + I_2^2 \overline{R}_2 = 0 \qquad \therefore P_i = I_2^2 \overline{R}_2 \quad \text{...(6.13.6)}$$

This is the condition for maximum efficiency. Thus the transformer efficiency is maximum when the iron loss P_i is equal to the total copper loss $I_2^2 \overline{R}_2$.

6.13.3 Load at Maximum Efficiency :

- Let the kVA of the transformer at full load be given to us and let us denote it by $kVA_{(max)}$.
- Let the kVA at a particular load be denoted by kVA (load).

Let P_i = Constant iron loss and P_{cu} = Copper loss at full load

- Then the copper loss which is dependent on load, will change with the value of the load. The copper loss at the particular value of load is given by,

$$\text{Copper loss at } kVA_{(load)} = \left[\frac{kVA_{(load)}}{kVA_{(max)}}\right]^2 \times P_{cu} \quad ...(6.13.7)$$

This is because the copper loss $\alpha\,(kVA)^2$.

- The condition for maximum efficiency is,

Copper loss = Iron loss

$$\therefore \left[\frac{kVA_{(load)}}{kVA_{(max)}}\right]^2 \times P_{cu} = P_i \quad ...(6.13.8)$$

$$\therefore kVA_{(load)} = kVA_{(max)}\sqrt{P_i / P_{cu}} \quad ...(6.13.9)$$

- This equation, indicates that the kVA load which corresponds to maximum efficiency is given by :

$$\text{kVA load for maximum efficiency} = \text{Full load kVA}\sqrt{\frac{\text{Iron loss}}{\text{Copper loss at full load}}}$$

At what value of load should the transformer operate in practice ?

We can answer this question in two ways.

1. If the load on the transformer is going to be variable, then it is designed to give maximum efficiency at about 75% of the full load.
2. But if it is to be continuously operated near the maximum load, then it is designed to give maximum efficiency at or near the full load.

6.13.4 Voltage Regulation of a Transformer :

➤➤➤ **[Asked in Exam : Dec. 05 !!!]**

- Ideally the secondary terminal voltage V_2 (or load voltage) of a transformer should remain constant independent of the load current as shown in Fig. 6.13.2.
- But practically the load voltage decreases with increase in load current I_L as shown in Fig. 6.13.2.
- **No load voltage :** The no load voltage is the secondary terminal voltage corresponding to zero load current. For a transformer

No load voltage = E_2 volts ...(6.13.10)

- **Full load voltage :** It is the secondary terminal voltage corresponding to the specified load current. Let us denote it by V_2. The percent voltage regulation is given mathematically as :

$$\% \text{ Regulation} = \frac{E_2 - V_2}{E_2} \times 100 \qquad \text{...(6.13.1)}$$

- Thus with increase in load current, the value of V_2 decreases and the percent regulation increases (becomes poor). Ideal value of voltage regulation is 0 %

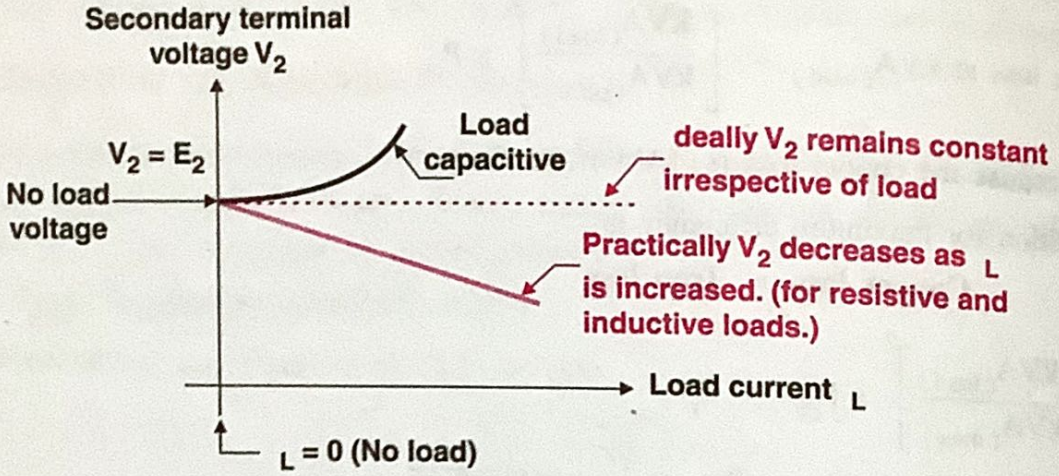

Fig 6.13.2 : Concept of voltage regulation

Definition of voltage regulation :

The voltage regulation of a transformer is defined as the change in secondary terminal voltage (V_2) from no load to full load with the primary source voltage (V_1) and the temperature of the transformer maintained constant.

Reason for reduction in voltage :

- The drop in secondary terminal voltage takes place due to the voltage drop taking place across the primary and secondary impedances.
- As the load current increases, the voltage drop across these impedances will increase. This will reduce the secondary terminal voltage V_2, with increase in I_L.

Does the secondary terminal voltage depend only on the load current ?

- The answer is NO. The secondary terminal voltage does not depend only on the magnitude of I_L. But it also depends on the type of the load.
- As shown in Fig. 6.13.2, the secondary terminal voltage decreases for resistive or inductive loads whereas it increases with increase in I_L if the load is capacitive.

Note : The regulation is positive for the resistive and inductive loads and it can be negative for the capacitive loads.

Ex. 6.13.1 : Efficiency of 400 kVA, single-phase transformer is 98.77% when delivering full load of 0.8 p.f. and it is 99.13% at half load unity p.f. Calculate :

(i) Iron loss (ii) Full load copper loss.

Soln. :

kVA rating = 400 kVA, η_1 = 0.9877 at p.F = 0.8 at full load

η_2 = 0.9913 at p.F = 1 at half load.

1. Full load efficiency $\eta_1 = \dfrac{kVA \times 1000 \times p.f.}{(kVA \times 1000 \times p.f.) + P_i + P_{cu\,(FL)}}$

Where P_i = Iron loss (constant) and

$P_{cu\,(FL)}$ = Full load copper loss.

$$\therefore \quad 0.9877 = \frac{400 \times 1000 \times 0.8}{(400 \times 1000 \times 0.8) + P_i + P_{cu\,(FL)}}$$

$$\therefore \quad P_i + P_{cu\,(FL)} = 3985 \text{ W} \qquad ...(1)$$

2. With the change in load, there is no change in iron losses, but the copper losses will change. Copper loss at half load is given by,

$$P_{cu(HL)} = (1/2)^2 \times P_{cu\,(FL)} = \frac{P_{cu\,(FL)}}{4} \qquad ...(2)$$

3. Efficiency at half load is given by,

$$\therefore \quad \eta_{(HL)} = \frac{1/2 \times kVA \times 1000 \times p.f.}{(1/2 \times kVA \times 1000 \times p.f.) + P_i + P_{cu\,(HL)}}.$$

$$0.9913 = \frac{1/2 \times 400 \times 1000 \times 1}{(1/2 \times 400 \times 1000 \times 1) + P_i + \dfrac{P_{cu\,(FL)}}{4}}$$

$$P_i + \frac{P_{cu\,(FL)}}{4} = 1755.2 \text{ W} \qquad ...(3)$$

Subtracting Equation (3) from Equation (1) we get,

$$\therefore \quad P_{cu\,(FL)} = 2973 \text{ W and } P_i = 1012 \text{ W}$$ **...Ans.**

Ex. 6.13.2 : The iron loss and full load copper loss of a 100 kVA, 6600/400 volts single phase transformer are 600 W and 900 W. Calculate the efficiency at full load and half load, at 0.8 p.f. lag. Calculate the load at which maximum efficiency is obtained and its magnitude at some power factor.

Soln. :

Given : kVA = 100, $\dfrac{V_1}{V_2} = \dfrac{6600 \text{ V}}{400 \text{ V}}$, P_i = 600 W, $P_{cu\,(FL)}$ = 900 W, p.f. = 0.8 lag

To find : i) η at full load (η_{FL})

ii) η at half load (η_{HL})

iii) load at which maximum efficiency is obtained and η_{max}.

Step 1 : Find η at full load :

$$\eta_{FL} = \frac{kVA \cos\phi \times 1000}{kVA \cos\phi + P_i + P_{cu\,(FL)}}$$

$$\therefore \quad \eta_{FL} = \frac{(100 \times 0.8 \times 1000)}{(100 \times 0.8 \times 1000) + 600 + 900} = \mathbf{0.98159 \text{ or } 98.159\%}$$ ...Ans.

Step 2 : Find η at half load :

Copper loss at half load is given by,

$$P_{cu\,(HL)} = \frac{1}{4} P_{cu\,(FL)} = \frac{900}{4} = \mathbf{225\ W}$$ ...Ans.

The iron loss will remain constant irrespective of load.

$$\therefore \quad \%\,\eta_{HL} = \frac{x\,kVA \cos\phi}{x\,kVA \cos\phi + P_i\,(P_{cu})_{HL}}$$

Where x = 0.5 for half load.

$$\%\,\eta_{HL} = \frac{(0.5 \times 100 \times 10^3 \times 0.8)}{(0.5 \times 100 \times 10^3 \times 0.8) + 600 + 225} \times 100 = \mathbf{97.98\%}$$ ...Ans.

Step 3 : To find load for η_{max} and $\%\,\eta_{max}$:

The condition for maximum efficiency is,

$$P_i = P_{cu} \qquad \therefore \quad P_{cu} = P_i = 600\ W$$

$$\text{kVA for maximum efficiency} = kVA \times \sqrt{\frac{P_i}{(P_{cu})_{FL}}}$$

$$\text{kVA for maximum efficiency} = 100 \times \sqrt{\frac{600}{900}}$$

$$\therefore \text{ kVA for maximum efficiency} = 81.649\ kVA$$

So if the load is 81.649 kVA then we obtain the maximum efficiency.

$$\text{Maximum efficiency, } \%\,\eta_{max} = \frac{(\text{kVA for maximum } \eta) \cos\phi}{[(\text{kVA for maximum } \eta) \cos\phi] + P_i + P_{cu}\,(\eta_{max})}$$

$$\%\,\eta_{max} = \frac{81.649 \times 10^3 \times 0.8}{(81.649 \times 10^3 \times 0.8) + 600 + 600} \times 100 = \mathbf{98.196\ \%}$$ ...Ans.

Ex. 6.13.3 : The primary and secondary windings of a 500 kVA transformer have resistances of 0.42 ohm and 0.0011 ohm respectively. The primary and secondary voltages are 6600 V and 400 V respectively. The iron loss is 2.9 kW. Calculate the efficiency on (i) full load and (ii) half load assuming the power factor of the load to be 0.8.

Soln. :

Given : $kVA = 500,\ R_1 = 0.42\ \Omega,\ R_2 = 0.0011\ \Omega,\ V_1 = 6600\ V,$

$V_2 = 400\ V,\ P_i = 2.9\ kW,\ p.f. = 0.8$

To find : i). Efficiency at full load, ii) Efficiency at half load.

Step 1 : Find K, I_1, R_{1T} :

1. Transformation ratio, $$K = \frac{V_2}{V_1} = \frac{400}{6600} = 0.06$$

2. Primary current, $$I_1 = \frac{kVA \times 10^3}{V_1} = \frac{500 \times 10^3}{6600} = 75.75\ A$$

3. Total primary resistance $$R_{1T} = R_1 + \frac{R_2}{K^2} = 0.42 + \frac{0.0011}{(0.06)^2}$$

$$\therefore\ R_{1T} = 0.7255\ \Omega$$

Step 2 : Find copper loss at full load and half load :

Full load copper loss $$P_{cu(FL)} = I_1^2 \times R_{1T}$$

$$= (75.75)^2 \times (0.7255) = 4162\ W$$

Half load copper loss $$P_{cu(HL)} = (0.5)^2 \times 4162 = 1040.5\ W$$

Step 3 : η at full load :

$$\eta_{FL} = \frac{kVA \times 10^3 \times \cos\phi}{[kVA \cos\phi \times 10^3] + P_i + P_{cu(FL)}}$$

$$\therefore\ \eta_{FL} = \frac{500 \times 10^3 \times 0.8}{(500 \times 10^3 \times 0.8) + 2900 + 4162} \times 100 = \mathbf{98.26\ \%}$$ ...Ans.

Step 4 : η at half load :

$$\eta_{HL} = \frac{x\ kVA \cos\phi}{x\ kVA \cos\phi + P_i + P_{cu(HL)}} \times 100$$

where x = 0.5 for half load

$$\therefore\ \eta_{HL} = \frac{0.5 \times 500 \times 10^3 \times 0.8}{(0.5 \times 500 \times 10^3 \times 0.8) + 2900 + 1040.5}$$

$$\therefore\ \eta_{HL} = \mathbf{98.07\%}$$ ...Ans.

6.14 Transformer Testing :

- In the following sections we are going to discuss some of the important tests carried out on a transformer.
- The tests are :
  1. Direct loading test.
  2. Open Circuit (O.C.) and Short Circuit (S.C.) tests.
- The direct loading test is used to find the efficiency and regulation of the transformer.
- O.C. and S.C. tests are carried out to obtain the equivalent circuit components.

6.14.1 Determination of Regulation and Efficiency using the Direct Loading Method :

- We can obtain the values of efficiency and regulation by using the direct loading method.
- In this method, the secondary winding is connected directly across the load for which regulation and efficiency are to be obtained. The experimental setup for this is shown in Fig. 6.14.1.

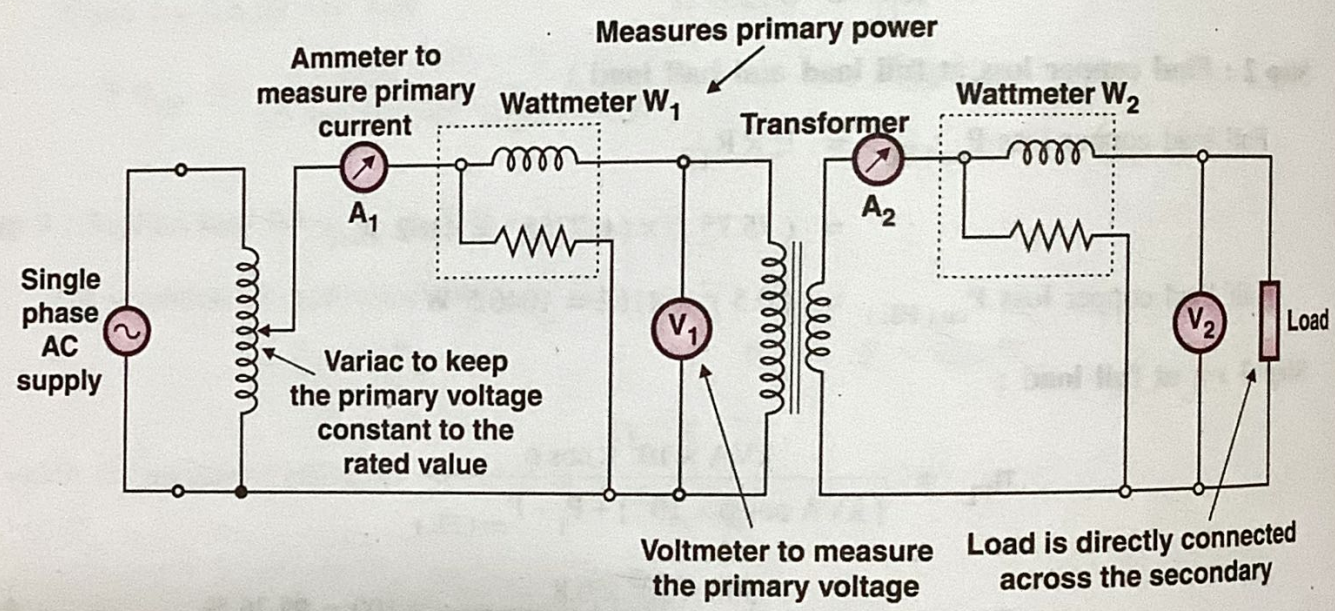

Fig. 6.14.1 : Experimental setup to determine regulation and efficiency

Description of the setup :

1. A variac is connected across the single-phase ac supply in order to keep the primary voltage constant to its rated value.
2. Ammeters A_1 and A_2 are used to measure the primary and secondary currents respectively. Two wattmeters W_1 and W_2 are used to measure the power on the primary and secondary sides respectively. The voltmeters V_1 and V_2 are connected to measure the primary voltage and load voltage respectively.
3. The load for which regulation and efficiency are to be obtain is connected across the secondary as shown in Fig. 6.14.1

6.14.2 Procedure and Observations for Efficiency Measurement :

1. Connect the desired load across the secondary as shown in Fig. 6.14.1
2. Switch on the single-phase AC supply connected across the variac and adjust the variac to get the rated primary voltage (measured by voltmeter V_1).
3. Measure the primary and load powers by means of wattmeter W_1 and W_2 respectively, and calculate the percent efficiency as follows :

$$\% \eta = \frac{\text{Output power delivered to load}}{\text{Input power to the primary}} \times 100$$

$$\therefore \quad \% \eta = \frac{W_2}{W_1} \times 100 \qquad \text{...(6.14.1)}$$

Note that : $W_1 = V_1 I_1 \cos \phi_1$ and $W_2 = V_2 I_2 \cos \phi_2$ ...(6.14.2)

6.14.3 Procedure and Observations for the Regulation Measurement :

1. Do not connect any load. This is the no load condition. $I_2 = 0$ and $V_2 = E_2$.
2. Switch on the AC power supply and adjust the variac to obtain the rated primary voltage V_1. Measure the voltage V_2. This voltage is called as the no load voltage. $\therefore V_2 = E_2$ under the no load condition.
3. Switch off the ac supply and connect the desired load.
4. Turn on the power supply again and measure V_2. This voltage is the full load secondary voltage. Calculate the regulation as,

$$\% \text{ Regulation} = \frac{V_{2\,NL} - V_{2\,FL}}{V_{2\,NL}} \times 100 = \frac{E_2 - V_2}{E_2} \times 100 \qquad \text{...(6.14.3)}$$

The common observation table :

Table 6.14.1 shows the common observation table.

Table 6.14.1 : Observation table for efficiency and regulation

Sr. No.	Parameter on primary side			Parameters on secondary side		
	V_1	I_1	W_1	V_2	I_2	W_2
1.						
2.						
:						
:						

Regulation characteristics :

Using this table we can plot the regulation characteristics of the transformer. To do so, we have to change the load from 0 to full load, measure the corresponding values of load current I_2 and load voltage V_2. Then plot the load regulation characteristics of load current (I_2) versus the load voltage V_2.

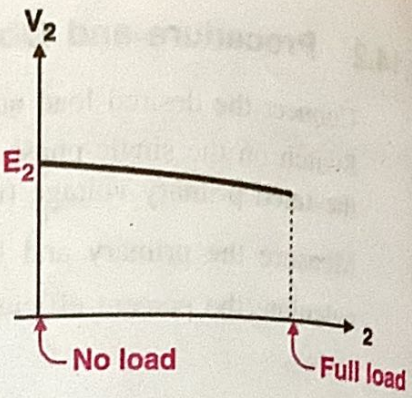

Fig. 6.14.2 : Regulation characteristics of a transformer

Ex. 6.14.1 : A single-phase 100 kVA; 3.3 kV/230 V, 50 Hz transformer has 89.5% efficiency at 0.85 lag p.f. both at full load and also at half load. Determine the efficiency of the transformer at 75% load and 0.9 lead p.f.

Soln. :

kVA rating = 100 kVA, $E_1 = V_1 = 3.3$ kV, $E_2 = 230$ V,

$\eta = 0.895$ at PF = 0.85 (lag) both at full load and half load.

$\eta = ?$ at 75% load and 0.9 leading P.f

Step 1 : To calculate the iron losses and copper losses :

1. Let the iron losses be P_i and copper losses be P_{cu}, at full load. Hence the full load efficiency is given by,

$$\eta_{F.L} = \frac{kVA_{(FL)} \times p.f._{(FL)}}{[kVA_{(FL)} \times p.f._{(FL)}] + P_i + P_{cu}}$$

$$\therefore \quad 0.895 = \frac{100 \times 10^3 \times 0.85}{[100 \times 10^3 \times 0.85] + P_i + P_{cu}}$$

$$\therefore \quad [P_i + P_{cu}]_{FL} = \frac{85 \times 10^3 - 76.075 \times 10^3}{0.895} = 9972 \text{ W} \quad ...(1)$$

2. The iron loss remains constant but copper loss changes with load. So copper loss at half load is,

$$P_{cu(HL)} = (1/2)^2 \times P_{cu(FL)} \quad ...(2)$$

$\therefore$ Efficiency at half load is given by,

$$\eta_{HL} = \frac{kVA_{(HL)} \times p.f._{(HL)}}{[kVA_{(HL)} \times p.f._{(HL)}] + P_i + P_{cu(HL)}}$$

$$\therefore \quad 0.895 = \frac{50 \times 10^3 \times 0.85}{[50 \times 10^3 \times 0.85] + P_i + \frac{P_{cu(FL)}}{4}}$$

$$\therefore \; P_i + \frac{P_{cu\,(FL)}}{4} = 4986 \text{ W} \qquad ...(3)$$

3. Subtracting Equation (3) from Equation (1) we get,

$$\frac{3}{4} \times P_{cu\,(FL)} = 4986 \text{ W.}$$

$$\therefore \; P_{cu\,(FL)} = 6648 \text{ W} \quad \text{and} \quad P_i = 3324 \text{ W}$$

Thus iron loss P_i = 3324 W and copper loss (F.L) = 6648 W.

Step 2 : Efficiency at 75 % load and p.f. = 0.9 :

$$\eta = \frac{0.75 \times kVA_{(FL)} \times p.f.}{[\,0.75 \times k\,V\,A_{(FL)} \times p.f.\,] + P_i + P_{cu\,(\text{at } 75\%\text{load})}}$$

But copper loss at 75% load is,

$$P_{cu\,(75\%\text{ load})} = \left(\frac{3}{4}\right)^2 \times P_{cu\,(FL)} = \frac{9}{16} \times 6648 = 3739.5 \text{ W}$$

$$P_i = \text{constant} = 3324 \text{ W}$$

$$\therefore \; \eta = \frac{0.75 \times 100 \times 10^3 \times 0.9}{[\,0.75 \times 100 \times 10^3 \times 0.9\,] + 3324 + 3739.5}$$

$$\therefore \; \eta = \mathbf{0.9052 \text{ or } 90.52\ \%}$$

...Ans.

Ex. 6.14.2 : The readings of direct-loading test on a single-phase transformer are :

	Primary side			Secondary side		
	V_1	I_1	W_1	V_2	I_2	W_2
	– V	– A	– W	– V	– A	– W
On no-load	220	0.7	40	102	0	0
On load	220	4.45	960	98	8.8	862.4

Find at the given load, its efficiency and regulation.

Soln. : From the given table we get following values,

Output power, W_2 = 862.4 W, Input power, W_1 = 960 W.

No load secondary voltage E_2 = 102 V

Full load secondary voltage V_2 = 98 V.

1)

$$\text{Efficiency } \eta = \frac{\text{Output power}}{\text{Input power}} = \frac{W_2}{W_1} = \frac{862.4}{960} = \mathbf{0.8983 \text{ or } 89.83\ \%}$$

...Ans.

2)

$$\textbf{Regulation} = \frac{E_2 - V_2}{E_2} \times 100 = \frac{102 - 98}{102} \times 100 = \mathbf{3.92\ \%}$$

...Ans.

Ex. 6.14.3 : A single-phase transformer delivers 10 A 220 V to a resistive load while the primary draws 6 A at 0.9 lagging p.f. from 450 V, 50 Hz supply. The turns ratio of the transformer is 2. Calculate efficiency and regulation under this condition.

Soln. : Please refer Master Key for solution.

Ex. 6.14.4 : A single-phase, 220 V / 110 V, 5 kVA, transformer has an efficiency of 96% on full load at unity p.f. and 95% on half the full load at unity p.f. Determine for full load condition, iron loss and copper loss of the transformer. Also determine efficiency on full load when p.f. is 0.8 lag.

Soln. : Please refer Master Key for solution.

6.15 O.C. and S.C. Tests :

- The direct loading method can be used to predetermine the efficiency and regulation of a transformer for any load condition and any power factor condition.
- But parameters of the equivalent circuit of a transformer can be obtained by using the open circuit (O.C.) test and the short circuit (S.C.) test on the transformer.

6.15.1 Open Circuit Test (O.C. Test) :

- The set up for O.C. test of a transformer is shown in Fig. 6.15.1.

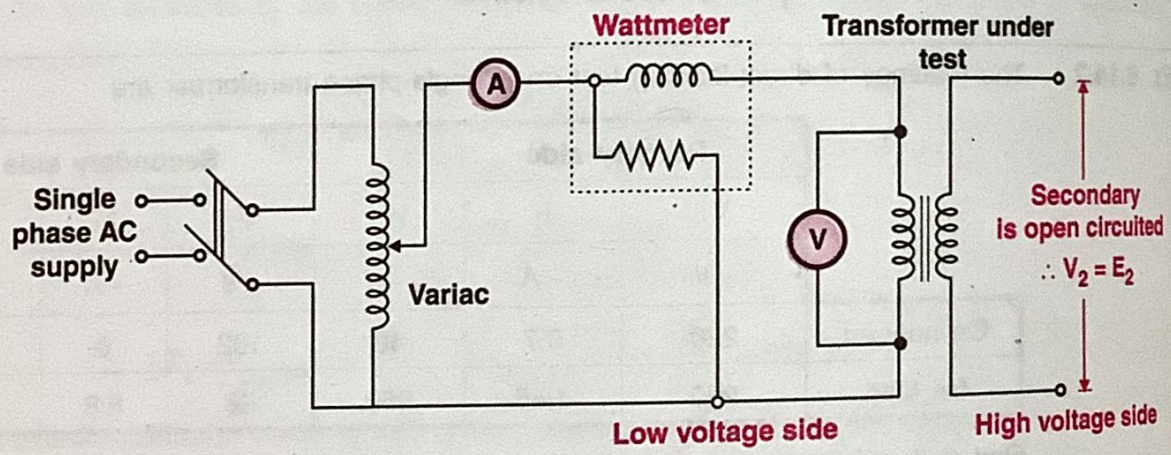

Fig. 6.15.1 : Set up for the O.C. test

- The primary winding of the transformer is connected to the rated ac voltage by means of using a variac.
- A voltmeter is connected across the primary winding to measure the primary voltage.
- An ammeter is used for measuring the primary current and the wattmeter is connected to measure the input power.
- The secondary is open circuited because it is an open circuit (O.C.) test. Sometimes a voltmeter is connected across the secondary to measure $V_2 = E_2$.
- Note that the ac supply voltage is applied generally to the low voltage side and the higher voltage side is used as secondary.

Procedure :

1. Connect the circuit as shown in Fig. 6.15.1.
2. Keep the variac at its minimum voltage position.
3. Switch on the ac power supply and adjust the variac to get the rated primary voltage as measured by voltmeter V across the primary.
4. Now measure the primary current and power using the ammeter and wattmeter respectively.
5. The ammeter reads the no load primary current I_0 whereas the wattmeter measures the no load input power W_0.
6. The observation table for the O.C. test is as follows.

Table 6.15.1 : Observation table for O.C. test

Voltmeter reading	Ammeter reading	Wattmeter reading
V_1 (Rated voltage)	I_0 (Amp)	W_0 (watt)

7. The two components of no load current I_0 are,

$$I_m = I_0 \sin \phi_0 \quad ...(6.15.1)$$

and $$I_c = I_0 \cos \phi_0 \quad ...(6.15.2)$$

8. The no load power factor is given by $\cos \phi_0$ and the input power at no load is given by,

$$W_0 = V_1 I_0 \cos \phi_0 \quad ...(6.15.3)$$

9. The phasor diagram on no load showing the two components of I_0 is shown in Fig. 6.15.2.

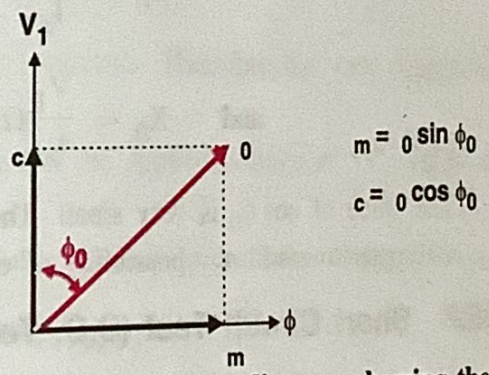

Fig. 6.15.2 : Phasor diagram showing the two components of the no load current I_0

10. The no load current I_0 is very small as compared to the full load primary current. The no load current I_0 is about 3 to 5% of the full load value.
11. As I_2 is zero, the secondary copper loss is zero. The primary copper loss will be negligible because I_0 is small.
12. Therefore the total copper loss is very small and can be assumed to be equal to zero. Hence the wattmeter reading W_0 represents the **iron losses**.

$$\therefore \quad W_0 = P_i = \text{Iron losses}$$

Calculation of parameters :

- The two parameters which can be calculated from the open circuit test are R_0 and X_0. They are calculated as follows.

Step 1 : Calculate no load power factor $\cos\phi_0$:

The wattmeter reads the real input power.

$$\therefore \quad W_0 = V_1 I_0 \cos\phi_0$$

$$\therefore \quad \cos\phi_0 = \frac{W_0}{V_1 I_0} \qquad \text{...(6.15.4)}$$

Calculate ϕ_0 from this

Step 2 : Calculate I_m and I_c :

$$I_m = I_0 \sin\phi_0$$

$$\text{and} \quad I_c = I_0 \cos\phi_0$$

So calculate I_m and I_c from the above equations.

Step 3 : Calculate R_0 and X_0 :

The values of R_0 and X_0 can be obtained as follows :

$$R_0 = \frac{V_1}{I_c}\,\Omega \qquad \text{...(6.15.5)}$$

$$\text{and} \quad X_0 = \frac{V_1}{I_m}\,\Omega \qquad \text{...(6.15.6)}$$

- The value of $\cos\phi_0$ is very small. Therefore it is necessary to use the low power factor type wattmeter to avoid any possibility of error in measurements.

6.15.2 Short Circuit Test (S.C. Test) :

- The set up for carrying out the short circuit (S.C.) test on a transformer is shown in Fig. 6.15.3.

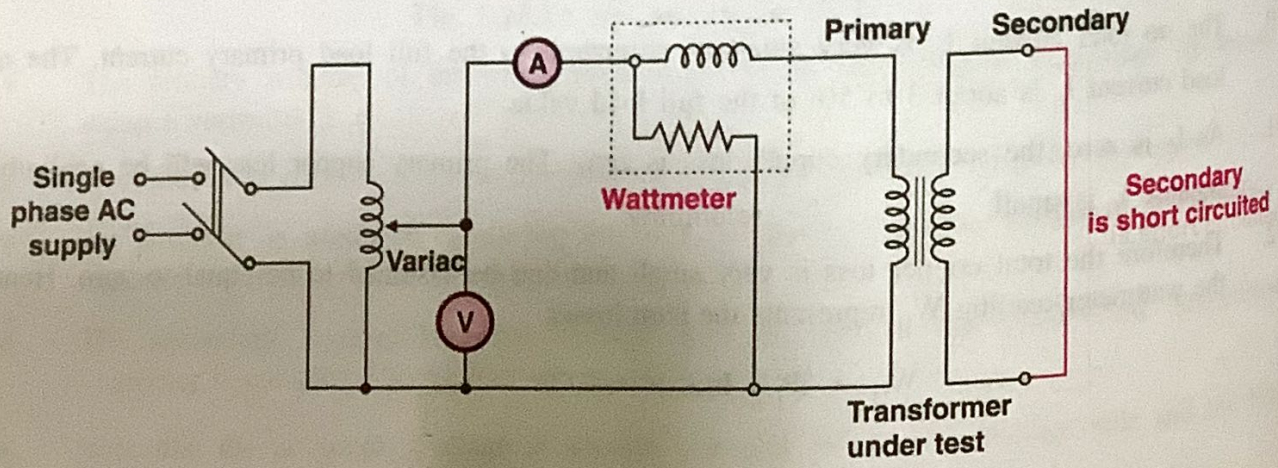

Fig. 6.15.3 : Experimental set up for S.C. test

- Variac is used to adjust the input voltage precisely to the rated voltage.
- The voltmeter is connected to measure the primary voltage. The ammeter measure the short circuit rated primary current I_{SC} and the wattmeter measures the short circuit input power.
- The secondary is short circuited with the help of thick copper wire.
- Generally the high voltage side is connected to the ac supply and the low voltage high current side is shorted.

Procedure :

1. Connect the circuit as shown in Fig. 6.15.3.
2. Short circuit the secondary which is a low voltage high current, low resistance winding.
3. Keep the variac at its minimum voltage position and switch on the ac supply voltage.
4. Increase the primary voltage very gradually, and adjust it to get the primary current equal to the rated value I_{SC}. Do not increase the primary voltage further.
5. Note down the wattmeter, voltmeter and ammeter readings. The observation table is as shown in Table 6.15.1.

Table 6.15.1 : Observation table for S.C. test

Voltmeter reading	Ammeter reading	Wattmeter reading
V_{SC} volts	I_{SC} (Amp)	W_{SC} watts

Parameter calculations :

- The primary and secondary currents are the rated currents. Therefore the total copper loss is the full load copper loss.
- The iron losses are a function of applied voltage. As the applied voltage in S.C. test is small, the iron losses will be negligibly small.
- Hence the wattmeter reading W_{SC} corresponds almost entirely to the full load copper loss.

$$\therefore \quad W_{SC} = \text{Full load copper loss} = P_{cu(FL)} \qquad ...(6.15.7)$$

- We can calculate the parameters R_{1T}, X_{1T} and Z_{1T} of the equivalent circuit from the short circuit (S.C.) test.
- We know that $W_{SC} = V_{SC} I_{SC} \cos \phi_{SC}$ ...(6.15.8)
- Hence the short circuit power factor is given by,

$$\cos \phi_{SC} = \frac{W_{SC}}{V_{SC} I_{SC}} \qquad ...(6.15.9)$$

- But the wattmeter reading W_{SC} indicates the full load copper loss.

$$\therefore \quad W_{SC} = \text{Copper loss} = I_{SC}^2 \times R_{1T} \qquad ...(6.15.10)$$

$$\therefore \quad R_{1T} = \frac{W_{SC}}{I_{SC}^2} \qquad ...(6.15.11)$$

- Similarly $Z_{1T} = \frac{V_{SC}}{I_{SC}} = \sqrt{R_{1T}^2 + X_{1T}^2}$

$$\therefore \quad X_{1T} = \sqrt{Z_{1T}^2 - R_{1T}^2} \qquad ...(6.15.12)$$

- In this way the parameters R_{1T}, X_{1T} and Z_{1T} can be calculated from the S.C. test.
- If the transformation ratio K, it is possible to obtain the parameters referred to the secondary side.

6.15.3 Efficiency Calculation from O.C. and S.C. Test :

- The expression for full load efficiency is given by,

$$\eta_{FL} = \frac{VA_{(FL)} \times p.f._{(FL)}}{[VA_{(FL)} \times p.f._{(FL)}] + P_i + P_{cu(FL)}} \qquad ...(6.15.13)$$

But $VA_{(FL)} = V_2 \times I_{2(FL)}$ and $PF_{(FL)} = \cos\phi$

$$\therefore \quad \eta_{FL} = \frac{V_2 I_{2(FL)} \cos\phi}{V_2 I_{2(FL)} \cos\phi + P_i + P_{cu(FL)}} \qquad ...(6.15.14)$$

- The iron loss P_i can be obtained from the O.C. test because

$$W_0 = P_i = \text{total iron loss} \qquad ...(6.15.15)$$

- And the full load copper loss $P_{cu(FL)}$ is obtained from the S.C. test because

$$W_{SC} = P_{cu(FL)} = \text{Copper loss} \qquad ...(6.15.16)$$

- We can obtain the value of efficiency at any power factor $\cos\phi_2$, or at any load which is a fraction of full load.
- For example if x = fraction of full load, then the efficiency at any load is given by,

$$\eta \text{ at any load} = \frac{x \times (\text{VA rating}) \times \cos\phi}{[x \times (\text{VA rating}) \times \cos\phi] + W_0 + x^2 W_{SC}} \qquad ...(6.15.17)$$

- $$\text{or } \eta \text{ at any load} = \frac{x V_2 I_2 \cos\phi}{(x V_2 I_2 \cos\phi) + W_0 + x^2 W_{SC}} \qquad ...(6.15.18)$$

where $I_2 = x I_{2FL}$

6.15.4 Calculation of Regulation :

- The percentage regulation (%R) is given by,

$$\% R = \frac{I_2 R_{2T} \cos\phi \pm I_2 X_{2T} \sin\phi}{V_2} \times 100 \qquad ...(6.15.19)$$

$$\% R = \frac{I_1 R_{1T} \cos\phi \pm I_1 X_{1T} \sin\phi}{V_1} \times 100 \quad ...(6.15.20)$$

- We can obtain the parameters such as $R_{1T}, X_{1T}, R_{2T}, X_{2T}$ from the S.C. test of the transformer.
- Whereas the rated voltages V_1, V_2 and the rated currents I_1 and I_2 in the above expressions are known from the given transformer.

Regulation at any load or power factor :

- We can calculate the percent regulation at any load or any power factor by using the fraction "x" as we did to calculate efficiency.

$$\% R \text{ at any load} = \frac{x I_2 R_{2T} \cos\phi \pm x I_2 X_{2T} \sin\phi}{V_2} \times 100 \quad ...(6.15.21)$$

- Where x = fraction of full load

  $\therefore$ xI_2 = fraction of the full load current

- And % regulation at any load in terms of the primary parameters as follows.

$$\% R = \frac{x I_1 R_{1T} \cos\phi \pm x I_1 X_{1T} \sin\phi}{V_1} \times 100 \quad ...(6.15.22)$$

- In this way using the O.C. and S.C. tests we can obtain the percent regulation at any predetermined load. For that we do not have to actually load the transformer.

Ex. 6.15.1 : The parameters of a 10 kVA, 500/250 volts, 50 Hz single phase transformer are as follows :

Resistance of primary = 0.2 ohm, resistance of secondary = 0.5 ohm, Reactance of primary = 0.4 ohm, Reactance of secondary = 0.1 ohm, Resistance of exciting circuit = 1500 ohm, Reactance of exciting circuit = 750 ohm. Find out the results of open circuit test and short circuit test.

Soln. :

Given : kVA = 10, $V_1/V_2 = \frac{500\text{ V}}{250\text{ V}}$, $V_1 = 500$ V, f = 50 Hz, $R_1 = 0.2\,\Omega$, $R_2 = 0.5\,\Omega$, $X_1 = 0.4\,\Omega$, $X_2 = 0.1\,\Omega$, $R_0 = 1500\,\Omega$, $X_0 = 750\,\Omega$

To find : i) Results of open circuit test.
ii) Results of short circuit test.

Step 1 : For O.C. test to find I_c, I_m, I_0, W_0 :

$$I_c = \frac{V_1}{R_0} \quad \text{and} \quad I_m = \frac{V_1}{X_0} = \frac{500}{750}$$

$$\therefore I_c = \frac{500}{1500} = 0.333 \text{ A}$$

$$\therefore I_m = 0.667 \text{ A}$$

Total no load current, $I_0 = \sqrt{I_c^2 + I_m^2} = \sqrt{(0.333)^2 + (0.667)^2}$

$\therefore I_0 = 0.7455 \text{ A}$

No load power, $W_0 = V_1 \times I_c = 500 \times 0.333 = 166.65\text{W}$

Step 2 : For S.C. test find R_{1T}, X_{1T}, Z_{1T} :

Effective primary resistance, $R_{1T} = R_1 + \frac{R_2}{K^2}$

But $K = \frac{V_2}{V_1} = \frac{250}{500} = 0.5$

$\therefore R_{1T} = 0.2 + \frac{0.5}{(0.5)^2} = 2.2\ \Omega$ ...Ans.

Total primary reactance, $X_{1T} = X_1 + \frac{X_2}{K^2} = 0.4 + \frac{(0.1)}{(0.5)^2} = 0.8\ \Omega$ ...Ans.

$Z_{1T} = R_{1T} + j X_{1T}$

$\therefore Z_{1T} = 2.2 + j\,0.8$

$\therefore |Z_{1T}| = \sqrt{(2.2)^2 + (0.8)^2} = 2.34\ \Omega$ ...Ans.

Step 3 : For S.C. test, to find full load rated current, V_{SC}, W_{SC} :

Full load primary current, $I_{SC} = \frac{kVA \times 10^3}{V_1}$

$\therefore I_{SC} = \frac{10 \times 10^3}{500} = \mathbf{20\ A}$ ...Ans.

$V_{SC} = I_{SC} \times Z_{1T}$

$V_{SC} = 20 \times 2.34 = \mathbf{46.81\ V}$ ...Ans.

$W_{SC} = I_{SC}^2 \times R_{1T} = (20)^2 \times 2.2$

$\therefore W_{SC} = \mathbf{880\ W}$ ...Ans.

Thus the readings will be

O.C. Test (H.V.side) : 500 V, 0.7455 A, 166.65 W

S.C. Test (H.V.side) : 46.81 V, 20 A, 880 W

Ex. 6.15.2 : The following readings were obtained during the short circuit test on a 3300/330 V single phase transformer with the measuring instruments connected to 3300 V side. The applied voltage was 124 V, so that the rated current of 15.4A was obtained and input power was 540 W. Find the voltage regulation of the transformer on full load and 0.8 p.f. lagging.

Soln. :

Given : $\frac{V_1}{V_2} = \frac{3300\ V}{330\ V}$, $V_1 = 3300$ V, $V_{SC} = 124$ V, $I_{SC} = 15.4$ A, $W_{SC} = 540$ W

p.f. = $\cos\phi = 0.8$ lag

To find : Voltage regulation.

Step 1 : To find Z_{1T} :

$$\left|(Z_{1T})\right| = \frac{V_{SC}}{I_1} = \frac{124}{15.4}$$

$$\therefore \left|Z_{1T}\right| = 8.052\ \Omega$$

...Ans.

Step 2 : To find R_{1T} and X_{1T} :

$$W_{SC} = I_1^2 \times R_{1T}$$

$$\therefore R_{1T} = \frac{540}{(15.4)^2} = 2.276\ \Omega$$

But $$\left|Z_{1T}^2\right| = R_{1T}^2 + X_{1T}^2$$

$$\therefore X_{1T} = \sqrt{Z_{1T}^2 - R_{1T}^2}$$

$$\therefore X_{1T} = \sqrt{(8.052)^2 - (2.276)^2} = 7.723\ \Omega$$

Step 3 : To find voltage regulation on FL and at 0.8 lagging p.f. :

$$\%\ \text{regulation} = \frac{I_1 R_{1T}\cos\phi + I_1 X_{1T}\sin\phi}{V_1} \times 100$$

But $\cos\phi = 0.8$ ...given $\therefore \phi = \cos^{-1} 0.8 = 36.86^\circ$

$\therefore \sin\phi = 0.6$ and $I_1 = I_{SC}$

$$\therefore \%\ \text{regulation} = \frac{(15.4 \times 2.276 \times 0.8) + (15.4 \times 7.723 \times 0.6)}{3300} \times 100$$

$$\therefore \textbf{\%regulation} = \frac{(28.04 + 71.36)}{3300} \times 100 = \mathbf{3.0121\ \%}$$

...Ans.

Ex. 6.15.3 : A 20 kVA, 1000/250 V, 50 Hz single phase transformer gave following test results :

O.C. test (With L.V. open) : 1000 V, 2 A, 250 W.

S.C. test (With H.V. shorted) : 5 V, 50 A, 200 W.

Calculate percentage regulation and efficiency at half load 0.8 p.f. lagging.

Soln. : Please refer Master Key for solution.

Ex. 6.15.4 : A 5 kVA, 250/500 V, 50 Hz, 1 phase transformer gave following test results :

No load	250 V	0.75 A	60 W	(L.V. side)
Short circuit	9 V	6 A	21.6 W	(H.V. side)

Calculate the equivalent circuit components and insert them on diagram.

Soln. : Please refer Master Key for solution.

Ex. 6.15.5 : A 10 kVA, 1 phase 500/250V transformer gave following test results :

O. C. test : 250V, 3.0A, 200W

S. C. test : 15V, 30A, 300W

Calculate efficiency and regulation at full load, 0.8 p.f. lagging.

Soln. : Please refer Master Key for solution.

Ex. 6.15.6 : A 220/110 V, 10 kVA non ideal transformer has a primary winding resistance of 0.25 Ω and a secondary winding resistance of 0.06 Ω. Determine :

(1) The primary and the secondary currents at rated load.

(2) The total equivalent resistance referred to primary and referred to secondary.

Soln. : Please refer Master Key for solution.

6.16 All Day Efficiency of a Transformer :

- We have already defined the power efficiency of the transformer as,

$$\eta = \frac{P_{out}}{P_{in}}$$

- But for the distribution transformers, the power efficiency does not give the true idea about the transformer performance.
- Hence the special type of efficiency called as energy efficiency or all day efficiency is specially defined as follows :

$$\% \text{ All day } \eta = \frac{\text{Output energy in kWh per day}}{\text{Input energy in kWh per day}} \times 100 \quad \text{...(6.16.1)}$$

$$= \frac{\text{Output energy in kWh per day}}{\text{Output energy + Energy spent per day for total losses}} \times 100 \quad \text{...(6.16.2)}$$

6.17 Solved University Examples :

Please refer Master Key for Solved University Examples.

6.18 University Questions with Answers :

Q. 1 Derive e.m.f. equation of transformer. **(Section 6.4)** **(Dec. 2001, 3 Marks)**

Q. 2 A 40 kVA, 3300/240 V, 50 Hz, 1 phase transformer has 660 turns on the primary. Determine :

(i) The number of turns on the secondary

(ii) The maximum value of flux in the core
(iii) The approximate value of primary and secondary full load currents.
Internal drops in the windings are to be ignored.

Ans. : Refer Ex. 6.17.1 in Master Key. **(Dec. 2001, 4 Marks)**

Q. 3 Draw and explain vector diagram of transformer, voltages and currents, loaded with lagging power factor. **(Section 6.9.3)** **(Dec. 2001, 8 Marks)**

Q. 4 It is desired to have 4.1 mwb maximum flux in the core of a transformer operating at 220 V and 50 Hz. Determine the required turns in primary. **(May 2002, 3 Marks)**

Ans. : Refer Ex. 6.17.2 in Master Key.

Q. 5 Derive the e.m.f. equation of a transformer. **(Section 6.4)** **(May 2002, 4 Marks)**

Q. 6 A 50 kVA, 1 ϕ transformer of 2300/230 V rating has the primary and secondary winding resistance of 2 Ω and 0.02 Ω respectively. The iron loss equal to 412 watts. Calculate the efficiency (a) at half full load (b) at full load when the power factor of the load is 0.8. **(May 2002, 6 Marks)**

Ans. : Refer Ex. 6.17.3 in Master Key.

Q. 7 A 100 kVA transformer has full load Cu loss of 1600 W and iron loss of 900 W. It will have maximum efficiency for a load of ..... kVA. **(Dec. 2002, 3 Marks)**

Ans. : Refer Ex. 6.17.4 in Master Key.

Q. 8 Derive an emf equation for a single phase transformer and explain voltage and current ratio of an ideal transformer. **(Sections 6.4 and 6.5)** **(Dec. 2002, 4 Marks)**

Q. 9 A 40 kVA transformer has iron loss of 450 W and full-load copper loss of 850 W. If the power factor of the load is 0.8 lagging. Calculate :

1. Full load efficiency.
2. The load at which maximum efficiency occurs.
3. The maximum efficiency.

(May 2003, 7 Marks)

Ans. : Refer Ex. 6.17.5 in Master Key.

Q. 10 Develop the approximate equivalent circuit of a transformer. How it helps in deciding the regulation of transformer ? **(Section 6.12)** **(May 2003, 8 Marks)**

Q. 11 What do you understand by ideal transformer ? **(Section 6.8)** **(May 2003, 3 Marks)**

Q. 12 Find the maximum efficiency of a 100 kVA, 1 ϕ transformer at unity power factor if the iron loss at half full load is 2 kW. **(Dec. 2003, 3 Marks)**

Ans. : Refer Ex. 6.17.6 in Master Key.

Q. 13 Draw phasor diagram for single phase transformer for lagging power factor **(Section 6.9.3)** **(Dec. 2003, 6 Marks)**

Q. 14 Draw phasor diagram for single phase transformer for

i) Lagging and **(May 2004, 4 Marks)**
ii) Leading power factor **(Section 6.9.3)** **(May 2004, 4 Marks)**

Q. 15 Derive EMF equation for a single phase transformer. **(Section 6.4)** **(Dec. 2004, 5 Marks)**

Q. 16 Explain different type of losses in the transformer. **(Section 6.7)** **(Dec. 2004, 5 Marks)**

Q. 17 A 50 KVA transformer has an efficiency of 98% at full load 0.8 p.f. and 97% at half load 0.8 p.f. Determine full load copper loss and iron loss. Find the load at which maximum efficiency occurs and also find the maximum efficiency. **(Dec. 2004, 8 Marks)**

Ans. : Refer Ex. 6.17.7 in Master Key.

Q. 18 Draw the phasor diagram of transformer (single-phase) subjected to leading p.f. consider winding resistance and magnetic leakage. **(Sections 6.9.3 and 6.11)** **(May 2005, 5 Marks)**

Q. 19 An Impedance Z is connected to the secondary of an ideal transformer, having primary and secondary turns as N_1 and N_2. Show that Z seen from primary is equal to $\left(\frac{N_1}{N_2}\right)^2 Z$.

(Section 6.10.1) **(Dec. 2005, 2 Marks)**

Q. 20 Discuss the effect of p.f on regulation of transformer. **(Section 6.13.4)** **(Dec. 2005, 4 Marks)**

Q. 21 Draw and explain the vector diagram of transformer with leading p.f. load. **(Section 6.9.3)** **(Dec. 2005, 6 Marks)**

Q. 22 Write briefly : What is the transformation ratio of an ideal transformer ? **(Section 6.5.3)** **(May 2006, 2 Marks)**

Q. 23 The efficiency of 400 KVA, 50 Hz, 1-phase transformer is 98.77% delivering F.L. at 0.8 pf and 99.13% at half load at UPF. Determine maximum efficiency at 0.8 pf. **(May 2006, 8 Marks)**

Ans. : Refer Ex. 6.17.8 in Master Key.

Q. 24 Draw the phasor diagram for practical transformer (1 - ϕ) at no load. **(Section 6.9.1)** **(Dec. 2006, 3 Marks)**

Q. 25 The efficiency of 220 KVA, 1100/220 V transformer is maximum of 98% at 50% of rated load. Calculate (i) Core loss (ii) Efficiency at rated load. **(Dec. 2006, 10 Marks)**

Ans. : Refer Ex. 6.17.9 in Master Key.

Q. 26 Show emf per turn in transform is 4.44 f ϕ_m, where f is frequency of supply and ϕ_m is maximum flux associated with transformer winding. **(Section 6.4)** **(May 2007, 3 Marks)**

Q. 27 Calculate the efficiency of transformer at half load and quarter load for 0.71 lagging p.f. for a 800 kVA, 1100/250 V, 50 Hz, 1-ϕ transformer whose losses are as follows :
iron loss = 800 W and copper loss at full load is 800 W. **(May 2007, 8 Marks)**

Ans. : Refer Ex. 6.17.10 in Master Key.

□□□