10.10.3 V-I Characteristics of a Zener Diode :

The V-I characteristics of a zener diode can be divided into two parts :

- Forward characteristics.
- Reverse characteristics.

Forward characteristics :

The forward characteristics of a zener diode is shown in Fig. 10.10.2(a). It is almost identical to the forward characteristics of a p-n junction diode.

Reverse characteristics :

- The reverse characteristics of a zener diode is substantially different from that of the p-n junction diode. This characteristics is as shown in Fig. 10.10.2(b).

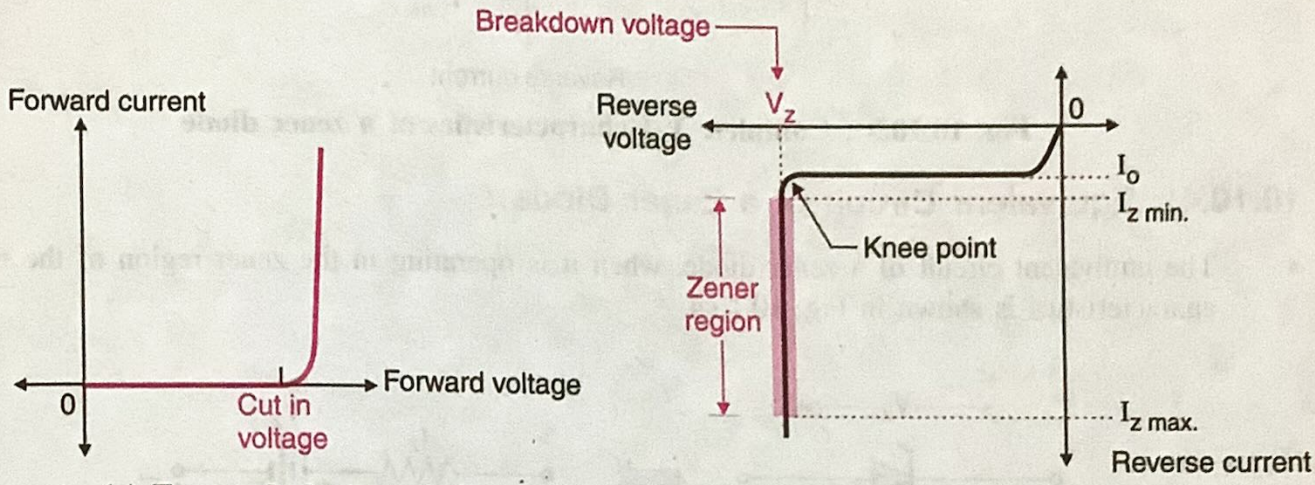

(a) Forward characteristics **(b) Reverse characteristics**

Fig. 10.10.2 : V-I characteristics of a zener diode

- As we increase the reverse voltage, initially a small reverse saturation current "I_o" which is in μA will flow. This current flows due to the thermally generated minority carriers.
- At a certain value of reverse voltage, the reverse current will increase suddenly and sharply. This is an indication that the breakdown has occurred. This breakdown voltage is called as **zener breakdown voltage or zener voltage and it is denoted by V_z.**
- The value of V_z can be precisely controlled by controlling the doping levels of p and n regions at the time of manufacturing a zener diode.
- After breakdown has occurred, the voltage across zener diode remains constant equal to V_z. Any increase in the source voltage will result in the increase in reverse zener current.
- The zener current after the reverse breakdown must be controlled by connecting a resistor R as shown in Fig. 10.10.1(c). This is essential to avoid any damage to the device due to excessive heating.

Zener region and its importance :

- After reverse breakdown, the zener diode operates in a region called zener region, as shown in Fig. 10.10.2(b).
- In this region the voltage across zener diode remains constant but current changes depending on the supply voltage.
- Zener diode is operated in this region when it is being used as a voltage regulator.
- The complete V-I characteristics is as shown in Fig. 10.10.3.

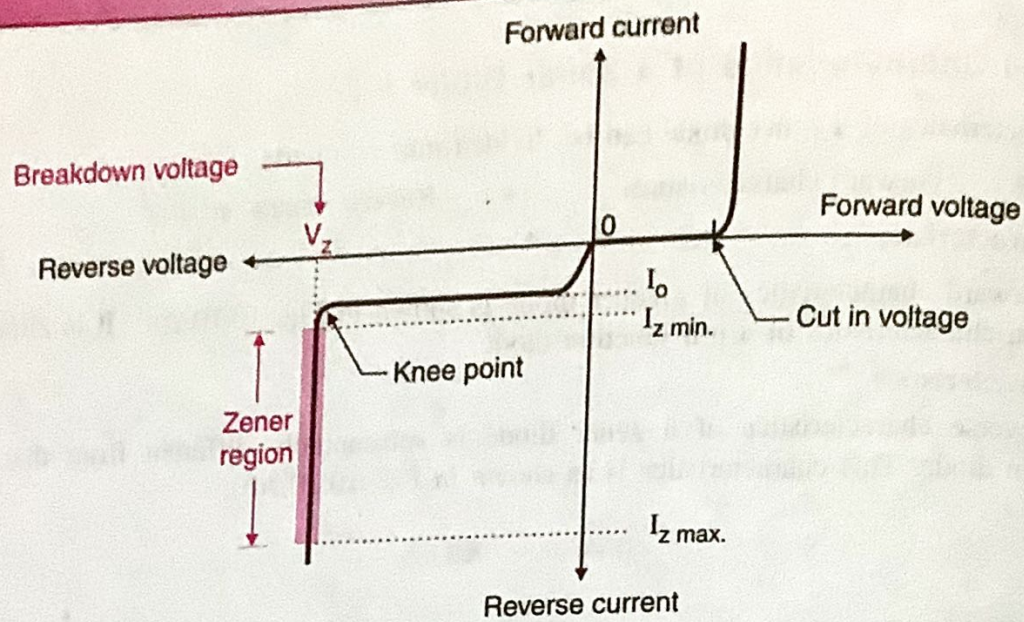

Fig. 10.10.3 : Complete V-I characteristics of a zener diode

10.10.4 Equivalent Circuit of a Zener Diode :

- The equivalent circuit of a zener diode, when it is operating in the zener region of the reverse characteristics is shown in Fig. 10.10.4.

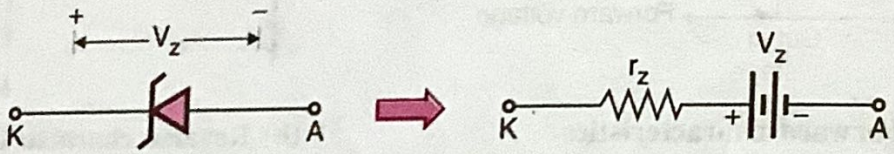

Fig. 10.10.4 : Equivalent circuit of a zener diode

- Fig. 10.10.4 shows that the zener diode is equivalent to a series combination of a small resistor "r_z" and a battery of terminal voltage "V_z".
- r_z is called as the dynamic resistance of the zener diode. It can be obtained by taking the reciprocal of the slope of reverse characteristics in the zener region. It is a small resistor of the order of few tens of ohms.

10.11 Breakdown Mechanisms in Zener Diode :

In zener diode, there are two different breakdown mechanisms. They are :

- Zener breakdown
- Avalanche breakdown

10.11.1 Zener Breakdown :

- The zener breakdown is observed in the zener diodes having V_z less than 5V or between 5 to 8 Volts. Let us understand the zener breakdown mechanism for V_z less than 5V.
- When a reverse voltage (5V or less) is applied to a zener diode, it causes a very intense electric field to appear across a narrow depletion region. The field intensity is typically of the order of 3×10^5 V / cm.

- Such an intense electric field is strong enough to pull some of the valence electrons into the conduction band by breaking their covalent bonds. These electrons then become free electrons which are available for conduction.
- A large number of such free electrons will constitute a large reverse current through the zener diode and breakdown is said to have occurred due to the "Zener effect".
- A current limiting resistance should be connected in series with the zener diode to protect it against the damage due to excessive heating.
- In zener breakdown, the breakdown voltage depends on the temperature of p-n junction. **The breakdown voltage decreases with increase in the junction temperature.**
- The V-I characteristics in the reverse biased region is shown in Fig. 10.11.1(a) which shows that the characteristics after breakdown is very sharp, almost vertical.

10.11.2 Avalanche Breakdown in Zener Diodes :

- The avalanche breakdown is observed in the zener diodes having V_z higher than 8V.
- Eventhough the mechanism of breakdown has changed, the device is still called as zener diode. Let us now understand the mechanism.
- In the reverse biased condition, the conduction will take place only due to the minority carriers. As we increase the reverse voltage applied to the zener diode, these minority carriers tend to accelerate. Therefore the kinetic energy associated with them increases.
- While travelling, these accelerated minority carriers will collide with the stationary atoms and impart some of the kinetic energy to the valence electrons present in the covalent bonds.
- Due to this additionally acquired energy, these valence electrons will break their covalent bonds and jump into the conduction bond to become free for conduction.
- Now these newly generated free electrons will get accelerated. They will knock out some more valence electrons by means of collision. This phenomenon is called as "carrier multiplication".
- In a very short time, a large number of free minority electrons and holes will be available for conduction, and the carrier multiplication process becomes self sustained.
- This self sustained multiplication is called "Avalanche Effect". A large reverse current starts flowing through the zener diode and the avalanche breakdown is said to have occurred.
- A current limiting resistor should be connected in series with the zener diode to protect it against the damage due to excessive heating.
- **The breakdown voltage in the avalanche breakdown increases with increase in the junction temperature.**
- The V-I characteristics in the reverse biased region with avalanche breakdown is shown in Fig. 10.11.1(b), which shows that the characteristics has a gradually increasing nature.

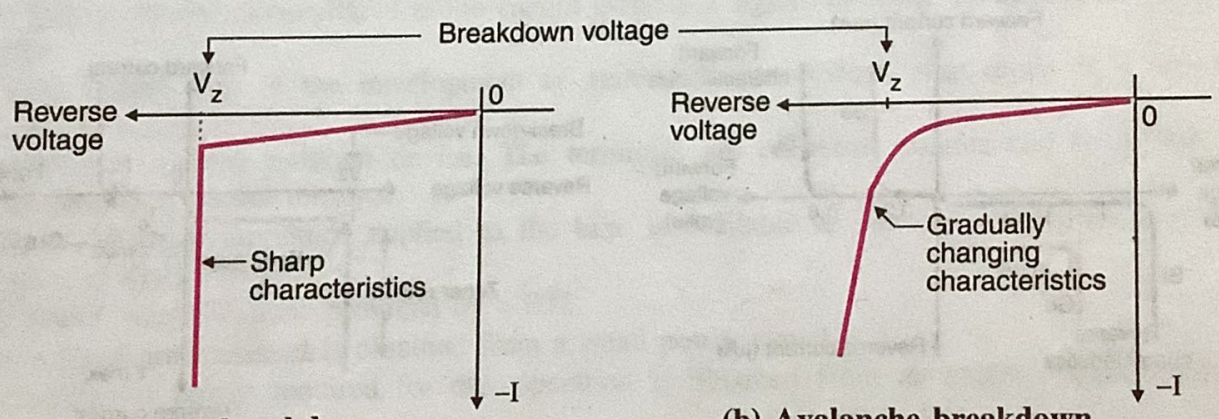

(a) Zener breakdown (b) Avalanche breakdown

Fig. 10.11.1

Table 10.11.1 : Comparison of zener and avalanche breakdown

Sr. No.	Zener breakdown	Avalanche breakdown
1.	This is observed in zener diodes having V_z between 5 to 8 volts.	This is observed in zener diodes having V_z greater than 8 volts.
2.	The valence electrons are pulled into conduction band due to very intense electric field appearing across the narrow depletion region.	The valence electrons are pushed into conduction band due to the energy imparted by colliding accelerated minority carriers.
3.	V-I characteristics with the zener breakdown is very sharp.	The V-I characteristics with the avalanche breakdown increases gradually. It is not as sharp as that with the zener breakdown.
4.	The breakdown voltage decreases with increase in temperature	The breakdown voltage increases with increase in temperature.

10.11.3 Comparison of Zener Diode and p-n Junction Diode :

Sr. No.	p-n junction diode	Zener diode
1.	Symbol : 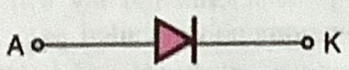	Symbol :
2.	This is operated in the forward biased condition.	Zener is operated in the reverse biased condition.
3.	V-I characteristics : Refer Fig. A	V-I characteristics : Refer Fig. B
4.	Applications of p-n junction diodes are in the rectifiers, clippers, clampers voltage multipliers.	Applications of zener diode is in voltage regulators, voltage limiters etc.

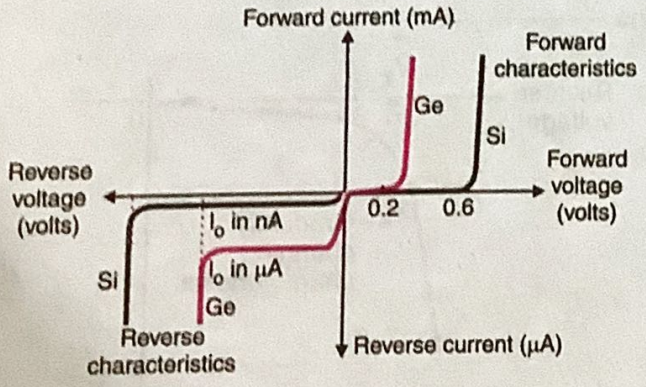

Fig. A

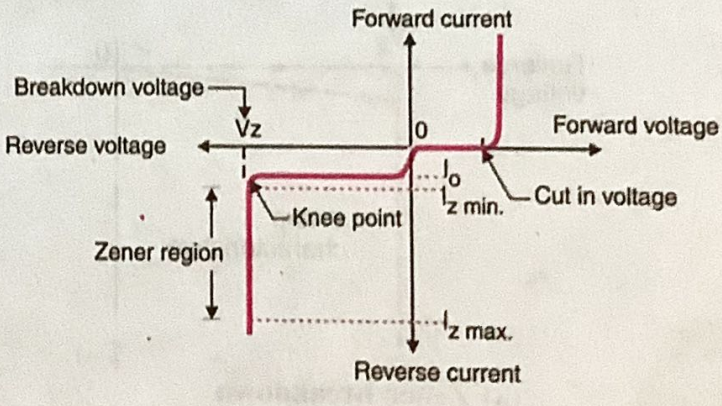

Fig. B

10.11.4 Zener Diode Specifications :

Some of the important specifications of a zener diode are :

1. Zener voltage
2. Power dissipation
3. Maximum power dissipation $P_{D(max)}$
4. Breakover current
5. Dynamic resistance
6. Maximum reverse current.

Typical specifications of a zener diode :

Table 10.11.2 shows some of the important specifications of a zener diode 1N 2816.

Table 10.11.2

Sr. No.	Specification	Unit	Value
1.	Zener voltage	V_z	18 Volts
2.	Maximum power dissipation	$P_{d(max)}$ at 25 °C	50 W
3.	Dynamic impedance	r_z	2 Ω
4.	Breakover current or knee current	I_{zk}	5 mA
5.	Maximum junction temperature	$T_{j(max)}$	150°C
6.	Temperature coefficient	T_C	0.075 % per °C

10.11.5 Applications of Zener Diode :

1. As a voltage reference in emitter follower type voltage regulator.
2. As a regulated power supply.
3. In the protection circuits for MOSFET.
4. In the clipping circuits.
5. In the pulse amplifier.

10.12 Bipolar Junction Transistor (BJT) :

- The semiconductor device like a diode cannot amplify a signal, therefore its application area is limited.
- A next logical step in the development of semiconductor devices after diode is a bipolar junction transistor (BJT).
- Transistor is a three terminal device. The terminals are collector, emitter and base, out of which base is a control terminal.
- A signal of small amplitude applied to the base is available in the "magnified" form at the collector of the transistor.
- This is the "amplification" provided by a BJT.
- Thus a large power signal is obtained from a small power signal.
- The additional power required for this operation is obtained from an external source of dc power.
- BJT is the basic building block of almost all the electronic circuits right from a simple regulator or oscillator circuit, logic gates to a digital computer.
- Before the invention of a transistor, vacuum tubes were being used for amplification applications.

10.12.1 Advantages of a Transistor :

The transistors are more desirable than the vacuum tubes because of their following advantages :

1. Small size and ruggedness.
2. Do not require any filament power.
3. Operate at a low voltage.
4. Higher efficiency.

10.12.2 Why is it called as a Transistor ?

The term "transistor" was derived from the words TRANSFER and RESISTOR. This term was adopted because it best describes the operation of a transistor, which is the transfer of an input signal current from a low resistance circuit to a high resistance circuit.

10.12.3 Why is it called a "Bipolar" Transistor ?

- The conduction in a bipolar junction transistor takes place due to both, electrons and holes. That is why it is called as a "bipolar" transistor.
- If the conduction takes place due to only one type of carriers i.e. majority carriers then the transistor is called as "unipolar" transistor.
- The example of a unipolar device is the field effect transistor (FET).

10.12.4 Types of Transistors :

The bipolar junction transistors are of two types :

- p-n-p transistors
- n-p-n transistors.

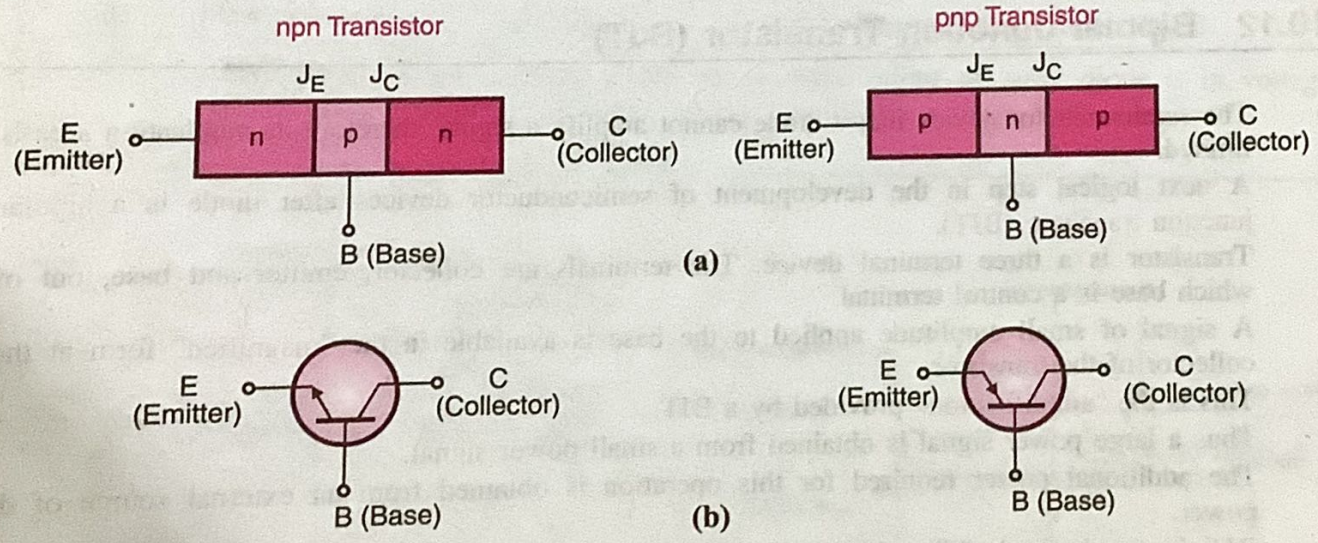

Fig. 10.12.1 : Construction and symbols of transistors

- The symbols of the p-n-p and n-p-n transistors are as shown in Fig. 10.12.1. The n-p-n transistors are more popular than the p-n-p transistors.
- The arrow is always placed on the emitter terminal and the arrow direction indicates the direction of conventional current flow of emitter current.

10.13 Construction of a BJT :

➤➤➤ [Asked in Exam : Dec. 02 !!!]

- The construction and symbols of the p-n-p and n-p-n transistors is as shown in Fig. 10.12.1(a) and (b) respectively.
- The n-p-n transistor is formed by sandwiching a thin "p" type semiconductor between two "n" type semiconductors whereas a p-n-p transistor is formed by sandwiching a thin "n" type semiconductor between two p type semiconductors.
- In both the types, base comes in between collector and emitter region.
- Base is always a thin and lightly doped layer.
- Emitter and collector layers are much wider than the base and are heavily doped. To be precise, the emitter is slightly more heavily doped than the collector and the collector area is slightly larger than the emitter area.

Number of p-n junctions and equivalent circuits :

- As shown in Fig. 10.12.1 (a) and (b), a transistor has two p-n junctions namely BE (Base to Emitter) junction and CB (Collector to Base) junction.
- A p-n junction is represented by a diode. Therefore the p-n-p and n-p-n transistors are equivalent to two diodes connected back-to-back as shown in Fig. 10.13.1 (a) and (b).

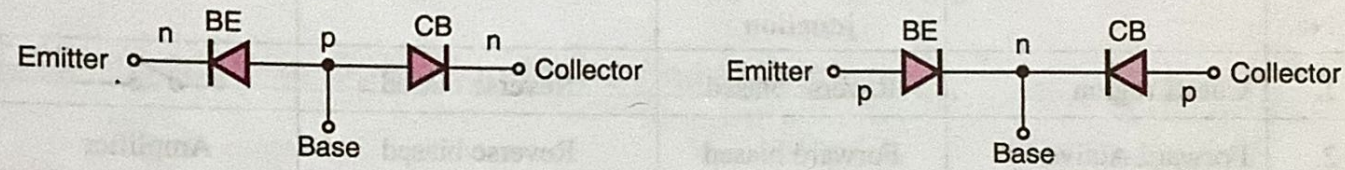

(a) Equivalent for npn transistor **(b) Equivalent for pnp transistor**

Fig. 10.13.1

10.13.1 An Unbiased Transistor :

- For an unbiased transistor no external power supplies are connected to it.
- We have already seen the formation of a depletion region in an unbiased p-n junction diode.
- As a transistor is formed of two p-n junctions, we can apply the same concept over here as well.

- Fig.10.13.2 shows the depletion regions formed at the B-E and C-B junctions of an n-p-n transistor.

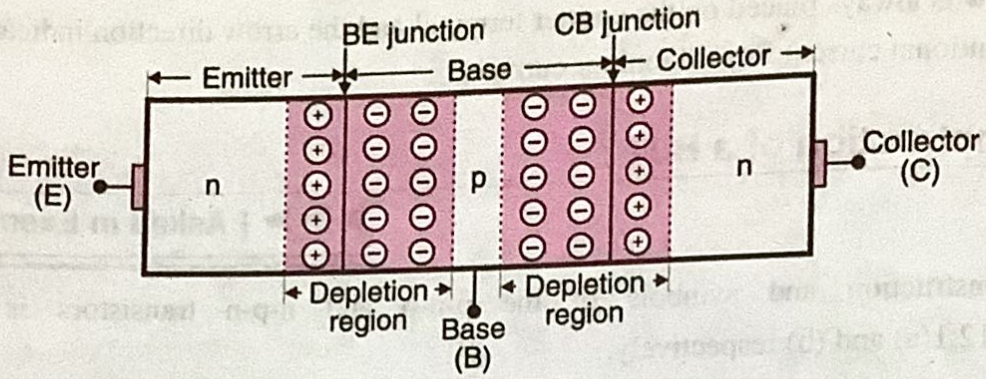

Fig. 10.13.2 : Depletion regions in an unbiased n-p-n transistor

10.14 Transistor Biasing in the Active Region :

- Biasing is the process of applying external voltages to the transistor. The two junctions in a BJT must be biased properly in order to operate it as an amplifier.
- A BJT is capable of operating in four different regions, depending on the way in which it is biased. The regions of operation are :
  1. Cutoff region (transistor is OFF)
  2. Saturation region (transistor is fully ON)
  3. Forward active region (in between saturation and cutoff).
  4. Inverse active mode
- The biasing conditions for these four regions of operation are as shown in Table 10.14.1.

Table 10.14.1 : Biasing conditions for different regions of operation

Sr. No.	Region of operation	Base emitter junction	Collector base junction	Application
1.	Cutoff region	Reverse biased	Reverse biased	
2.	Forward Active region	Forward biased	Reverse biased	Amplifier
3.	Saturation region	Forward biased	Forward biased	
4.	Inverse active	Reverse biased	Forward biased	

- The biasing of transistor junction for active region are shown in Fig. 10.14.1 for an n-p-n transistor. A transistor should be biased in the forward active region so as to operate it as an amplifier.
- Fig. 10.14.1 also indicates the conventional directions of the currents I_C, I_B and I_E plus the polarities of voltages V_{BE} and V_{CE}.

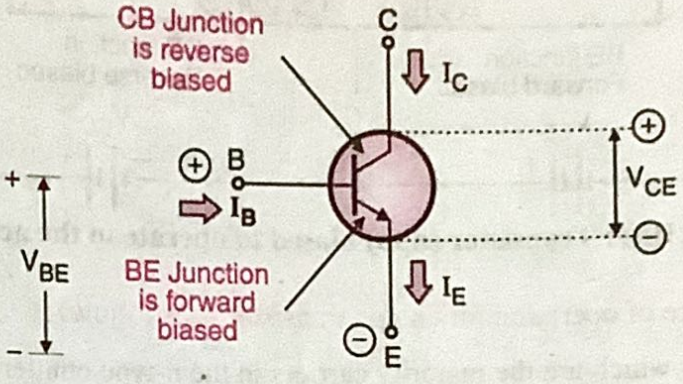

Fig. 10.14.1 : Transistor biasing for active region

- **In order to use the transistor as an amplifier, it must be operated in its active region.** The biasing of the p-n-p and n-p-n transistors for their active region operation and the directions of the currents are as shown in Fig. 10.14.2.

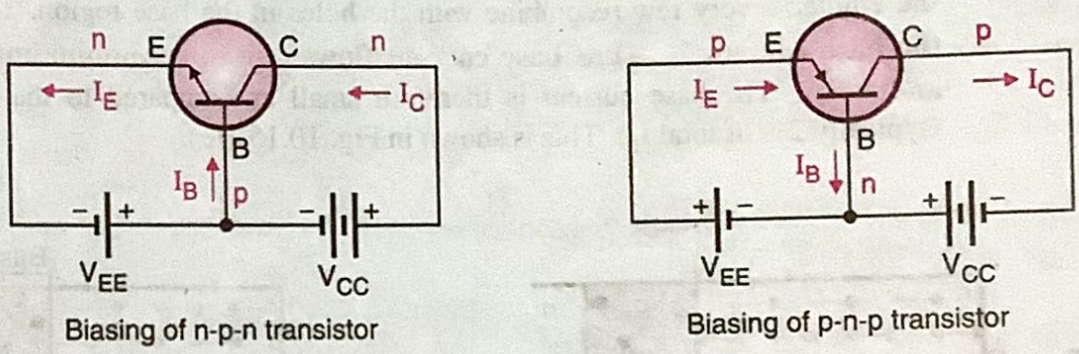

Fig. 10.14.2 : Transistor biasing in the active region

10.15 Transistor Operation in the Active Region :

10.15.1 Operation of npn Transistor :

- The positive supply V_{EE} will forward bias the base-emitter junction and the voltage V_{CC} will reverse bias the collector to base junction as shown in Fig. 10.15.1(a).
- Hence the width of depletion region for B-E junction is very small, but that at the C-B junction is large.

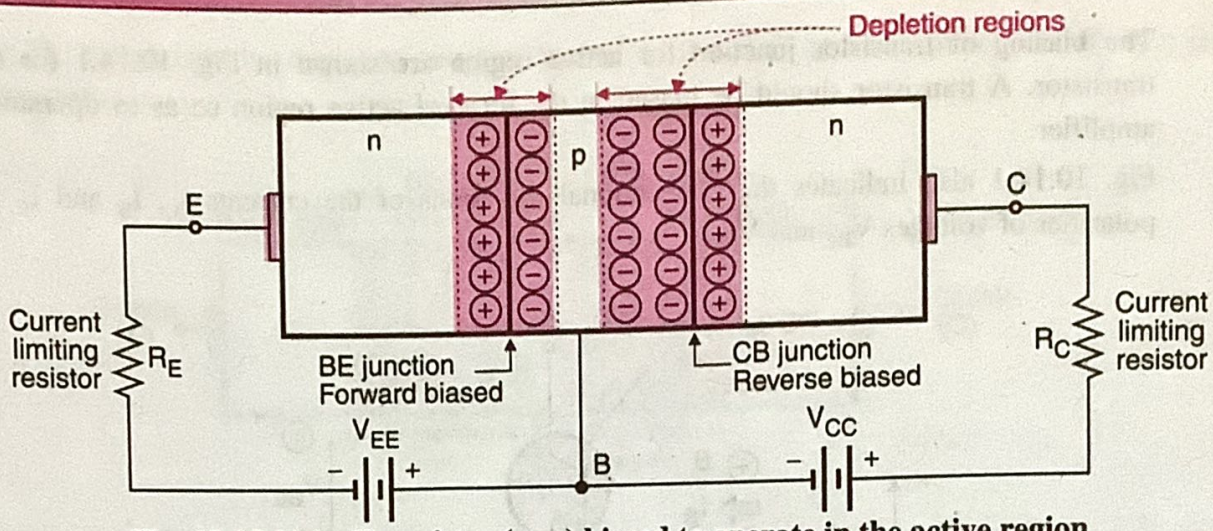

Fig. 10.15.1(a) : Transistor (npn) biased to operate in the active region

Operation : The sequence of operation for an npn transistor is as follows :

Step 1 : The electrons which are the majority carriers in the n-type emitter will start flowing towards the p-type base as shown in Fig. 10.15.1(b). This will constitute the emitter current I_E.

Step 2 : Electrons moving from the emitter to base have three options as follows :

1. They recombine with the holes present in the base. As the base region is thin and lightly doped the number of holes is few. Hence out of the total injected electrons from the emitter a very few recombine with the holes in the base region. **This constitutes the base current I_B. Thus base current flows due to recombinations of electrons and holes.** The base current is therefore small as compared to the emitter current (typically 2% of total I_E). This is shown in Fig. 10.15.1(c).

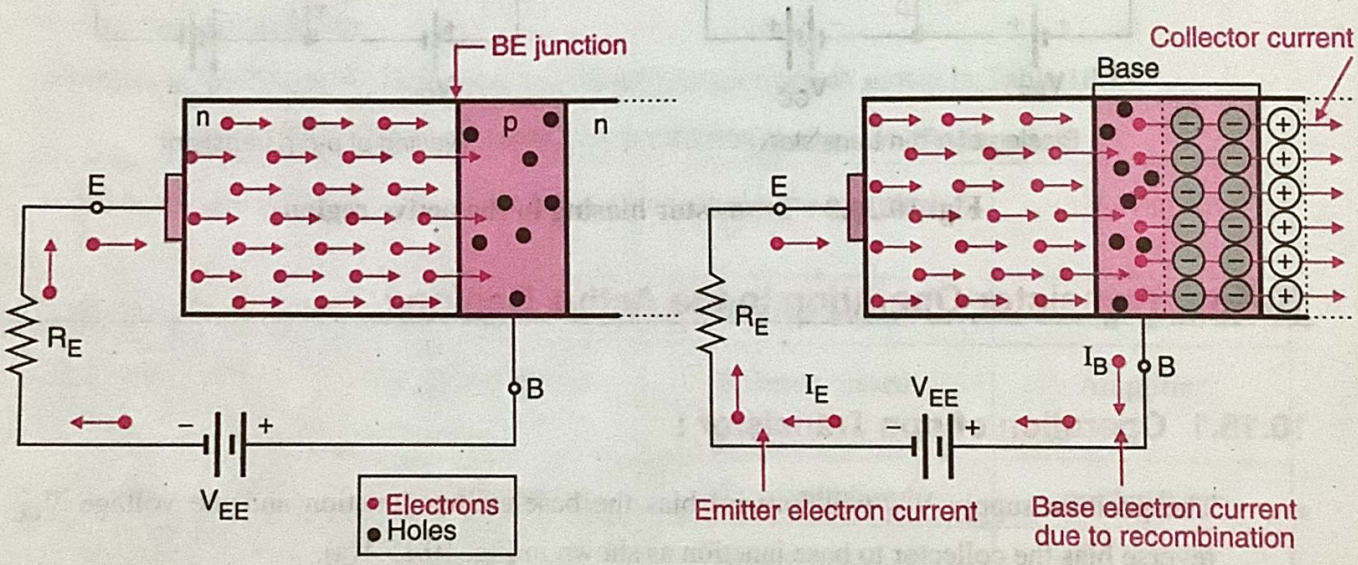

(b) Constitution of emitter current **(c) Constitution of base and collector currents**

Fig. 10.15.1

2. Some of the electrons diffuse through the base and out of the base connection.
3. The remaining large number of electrons will pass through the depletion region of CB junction and pass through the collector region to the positive end of the external power supply V_{CC} as shown in Fig. 10.15.1(d). **The collector current I_C is much larger than the base current.**

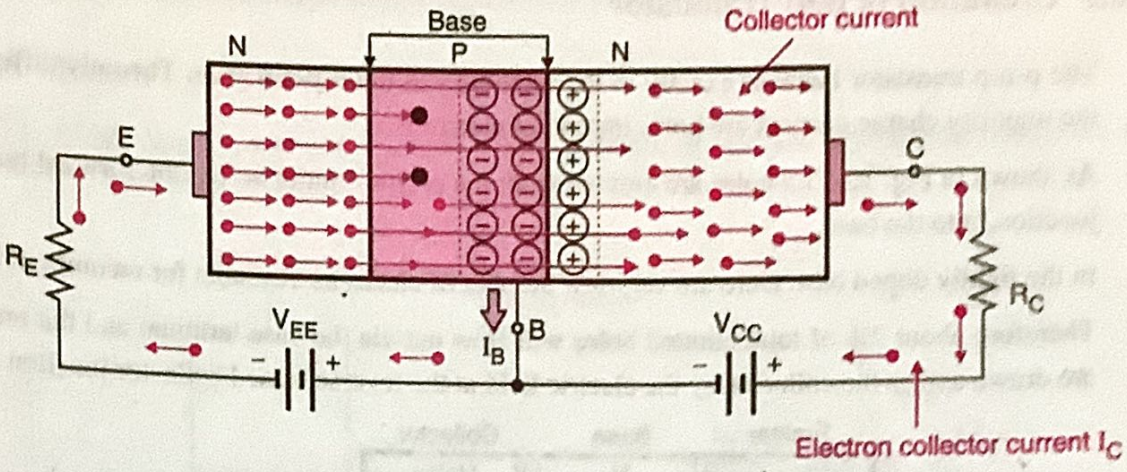

Fig. 10.15.1(d) : Operation of the npn transistor

Simplified operation of npn transistor :

The operation of npn transistor discussed earlier can be simplified as follows :

- The forward bias at the B-E junction reduces the barrier potential and causes the electrons to flow from n-type emitter to p-type base.
- Holes also will flow from p-type base to n-type emitter. But as the base is more lightly doped than the emitter, almost all the current flowing across the B-E junction consists of electrons entering the base from the emitter. Hence electrons are the majority carriers in an n-p-n transistor.
- Some of the electrons entering into the base region do not reach the collector region. Instead they flow out of the base terminal via the base connection as shown in Fig. 10.15.2, due to recombination. As the base region is very thin and lightly doped, there are very few holes available in the base region for recombination. Hence about 2% electrons will flow out of base due to recombination.
- The remaining 98% electrons cross the reverse biased collector junction to constitute the collector current. They cross the collector region and are collected by the supply V_{CC}.

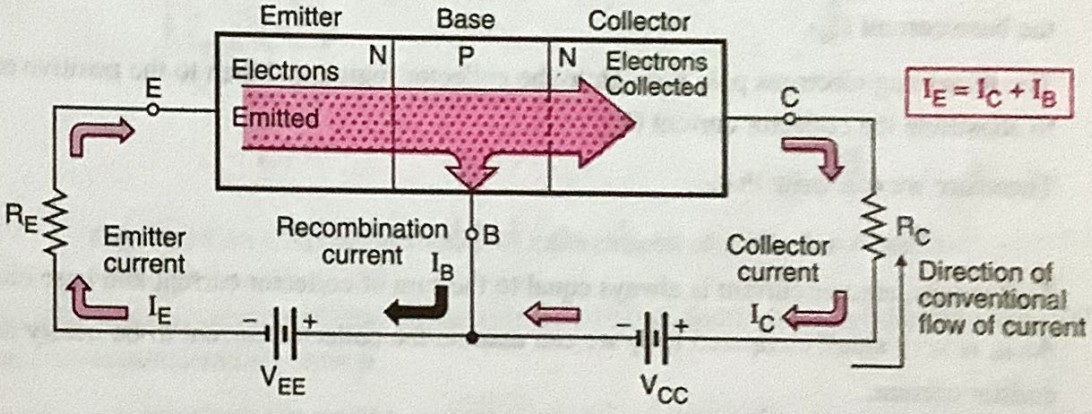

Fig. 10.15.2 : Operation of an npn transistor

- The emitter current is equal to the sum of collector and base currents.

$$\therefore \quad I_E = I_C + I_B$$

10.15.2 Operation of pnp Transistor :

- The p-n-p transistor behaves exactly in the same way as the n-p-n device. The only difference is the majority charge carriers are holes instead of electrons.
- As shown in Fig. 10.15.3 holes are emitted from the p-type emitter across the forward biased EB junction, into the base.
- In the lightly doped base there are very few number of electrons available for recombination.
- Therefore about 2% of total emitted holes will flow out via the base terminal and the remaining are drawn across the collector by the electric field at the reverse biased collector junction.

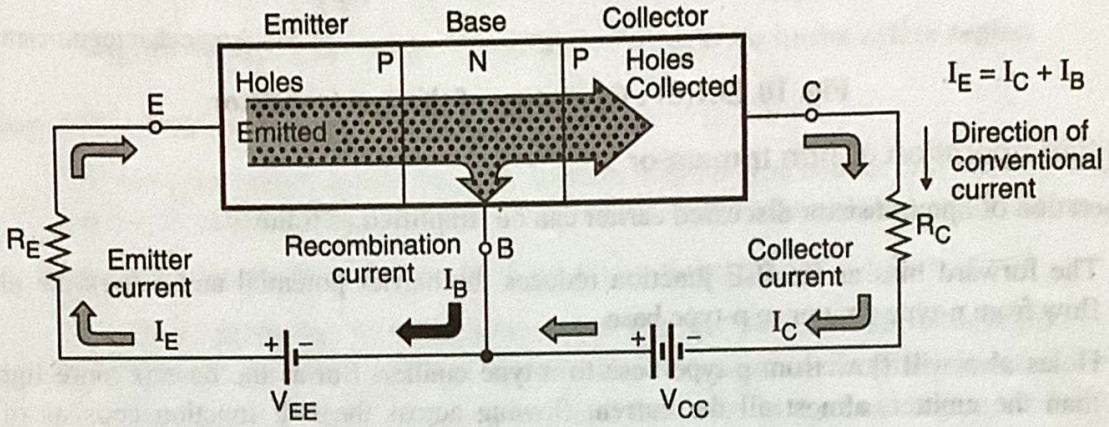

Fig. 10.15.3 : Operation of a pnp transistor

- As in case of n-p-n transistor, the forward bias at the EB junction controls the collector and emitter currents.

10.15.3 Transistor Currents :

- As seen from Fig. 10.15.2 and as discussed earlier, the electrons injected from emitter into the base constitute the emitter current (I_E).
- Out of these electrons very few will combine with the holes in the thin base region to constitute the base current (I_B).
- The remaining electrons pass through to the collector region and then to the positive end of V_{CC} to constitute the collector current (I_C).
- Therefore we can write that,

$$I_E = I_C + I_B \quad \text{...(10.15.1)}$$

- That means, emitter current is always equal to the sum of collector current and base current.
- As I_B is very small compared to I_E we can assume the collector current to be nearly equal to the emitter current.

$$\therefore I_C \approx I_E \quad \text{...(10.15.2)}$$

10.15.4 Circuit Symbols and Conventions :

- The block diagram and conventional circuit symbols of npn and pnp bipolar transistors are as shown in Fig. 10.15.4.

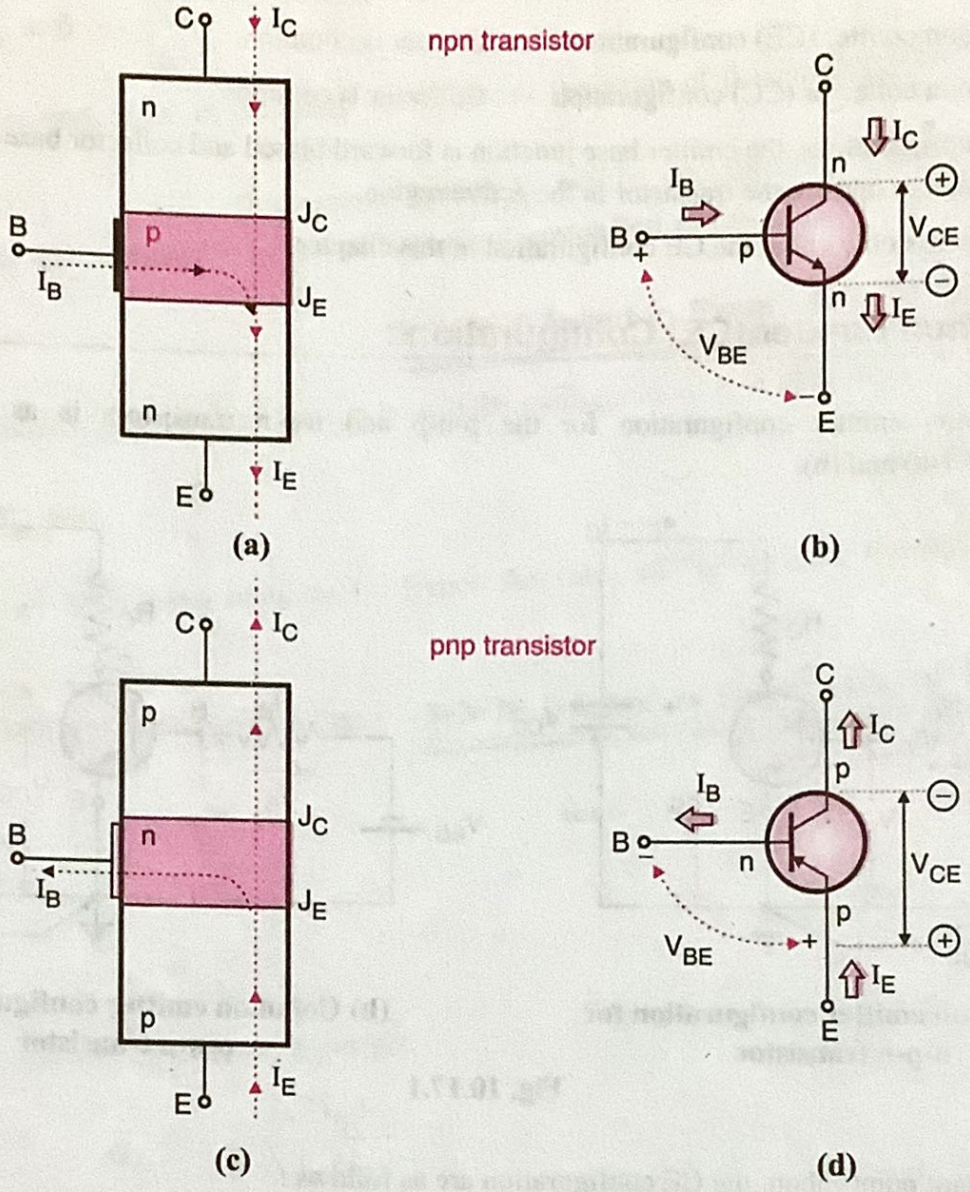

Fig. 10.15.4 : Circuit symbols and conventions of a bipolar transistor

- The arrowhead is always placed on the emitter terminal and it indicates the direction of flow of the conventional emitter current.
- For the npn transistor the emitter current flows out of the emitter terminal whereas for the pnp transistor the emitter current flows into the emitter terminal.
- The current direction for all the other current components have been shown. Note that all these are the conventional currents.

10.16 Transistor Configurations :

- Depending on which terminal is made common to input and output port there are three possible configurations of the transistor. They are as follows :
  1. Common base (CB) configuration : Base is common.
  2. Common emitter (CE) configuration : Emitter is common.
  3. Common collector (CC) configuration : Collector is common.
- In all the configurations, the emitter base junction is forward biased and collector base junction is reverse biased to operate the transistor in the active region.
- We will discuss only about the CE configuration in this chapter.

10.17 Common Emitter (CE) Configuration :

- The common emitter configuration for the p-n-p and n-p-n transistors is as shown in Figs. 10.17.1(a) and (b).

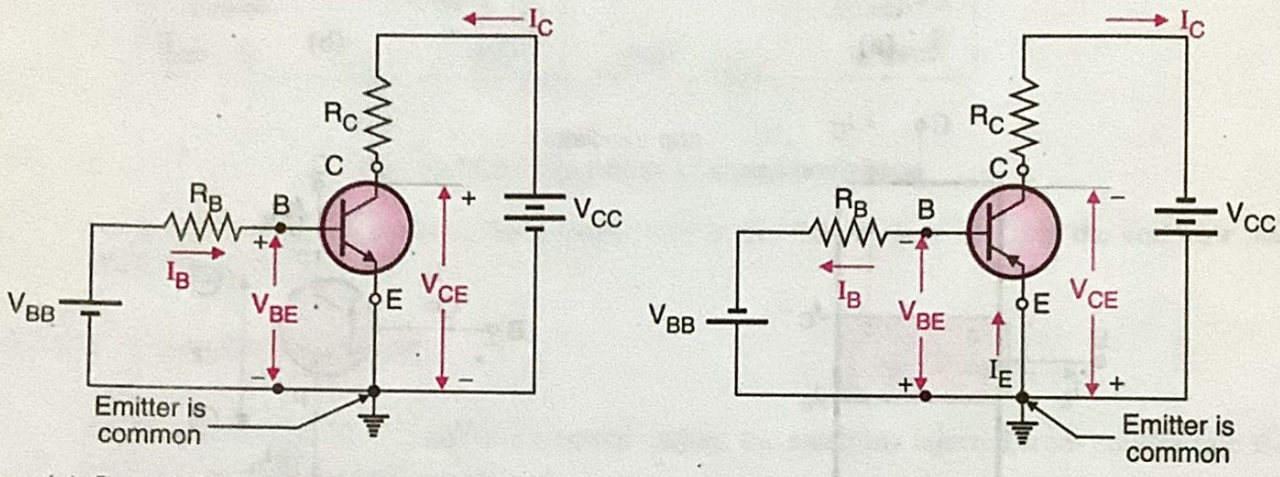

(a) Common emitter configuration for n-p-n transistor

(b) Common emitter configuration for p-n-p transistor

Fig. 10.17.1

- The important points about the CE configuration are as follows :
- Now the emitter acts as a common terminal between input and output. The input voltage is applied between base and emitter. Hence V_{BE} is the input voltage and I_B is the input current.
- The output is taken between the collector and emitter. Therefore V_{CE} is the output voltage and I_C is the output current.
- In order to operate the transistor in its active region, the base-emitter (BE) junction is forward biased and the collector base junction is reverse biased.

10.17.1 Current Gain (β_{dc}) :

➤➤➤ [Asked in Exam : May 02 !!!]

- Current gain is defined as the ratio of output current to input current. For CE configuration, the current gain is denoted by (β_{dc}) or simply β and is given by,

$$\beta_{dc} \text{ or } \beta = \frac{I_C}{I_B} \qquad ...(10.17.1)$$

- We have seen that I_B is very small as compared to I_C. Hence the value of β is large typically between 50 to 150.
- From Equation (10.17.1), $I_C = \beta I_B$. Thus output current I_C can be controlled by the small input current I_B. Hence the transistor is called as a **current controlled device.**

10.17.2 α_{dc} :

➤➤➤ [Asked in Exam : May 02 !!!]

- α_{dc} is called as the current gain of the common base (CB) configuration. It is defined as,

$$\alpha_{dc} \text{ or } \alpha = \frac{I_C}{I_E} \qquad ...(10.17.2)$$

- I_C is always less than but almost equal to I_E. Hence the value of "α" is close to but less than 1.

10.17.3 Relation between α_{dc} and β_{dc} :

➤➤➤ [Asked in Exam : May 02 !!!]

We know that $\alpha_{dc} = \dfrac{I_C}{I_E}$ But $I_E = I_C + I_B$

$$\therefore \quad \alpha_{dc} = \frac{I_C}{I_C + I_B}$$

- Divide numerator and denominator by I_B to get,

$$\alpha_{dc} = \frac{(I_C / I_B)}{1 + (I_C / I_B)}$$

But $(I_C / I_B) = \beta_{dc}$

$$\therefore \quad \alpha_{dc} = \frac{\beta_{dc}}{1 + \beta_{dc}} \qquad ...(10.17.3)$$

- This is the relation between α_{dc} and β_{dc}. Similarly we can obtain the expression for β_{dc} in terms of α_{dc} as follows :

We know that $\beta_{dc} = \dfrac{I_C}{I_B}$ But $I_B = I_E - I_C$

$$\therefore \quad \beta_{dc} = \frac{I_C}{(I_E - I_C)}$$

- Divide numerator and denominator by I_E to get,

$$\beta_{dc} = \frac{(I_C / I_E)}{1 - (I_C / I_E)}, \qquad \text{But} \quad (I_C / I_E) = \alpha_{dc}$$

$$\therefore \quad \beta_{dc} = \frac{\alpha_{dc}}{1 - \alpha_{dc}} \qquad ...(10.17.4)$$

- Thus the relations between α_{dc} and β_{dc} are,

$$\alpha_{dc} = \frac{\beta_{dc}}{1 + \beta_{dc}} \quad \text{and} \quad \beta_{dc} = \frac{\alpha_{dc}}{1 - \alpha_{dc}}$$

10.17.4 Reverse Leakage Current in CE Configuration :

- The total collector current in a CE configuration is given by,

$$I_C = \beta I_B + I_{CEO} \qquad ...(10.17.5)$$

- In this expression I_{CEO} is called as the reverse leakage current of transistor in CE configuration. It is the current due to minority carrier and hence depends on temperature.
- The reverse leakage current (I_{CEO}) increases with increase in the temperature. This current flows in the same direction as that of I_C. Therefore the collector current I_C will increase with increase in temperature even when I_B is constant.
- Refer Fig. 10.17.2 which shows that if base is open then the collector current is equal to I_{CEO}

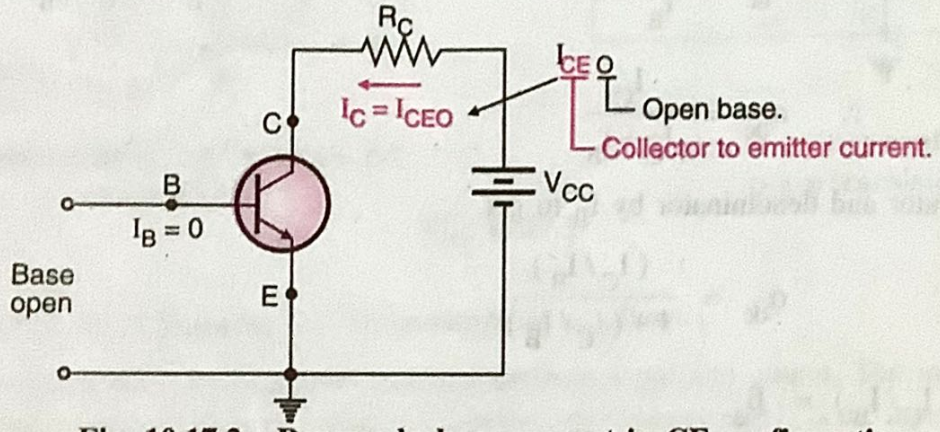

Fig. 10.17.2 : Reverse leakage current in CE configuration

- I_{CEO} is the collector to emitter current when the base is open as shows below :

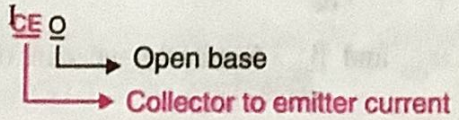

- I_{CEO} is an unwanted current because it makes the collector current I_C temperature dependent, which is an undesirable.

10.18 Characteristics of Transistor in CE Configuration :

The characteristics of a transistor help us to understand its behaviour. The transistor characteristics are of three types :

- Input characteristics
- Output characteristics.
- Transfer characteristics

10.18.1 Input Characteristics :

➤➤➤ [Asked in Exam : Dec. 01, May 05 !!!]

- Input characteristics is always a graph of input current versus input voltage. For CE configuration, input current is I_B and input voltage is V_{BE}.
- Hence input characteristics is a graph of I_B versus V_{BE} plotted at a constant output voltage V_{CE}.

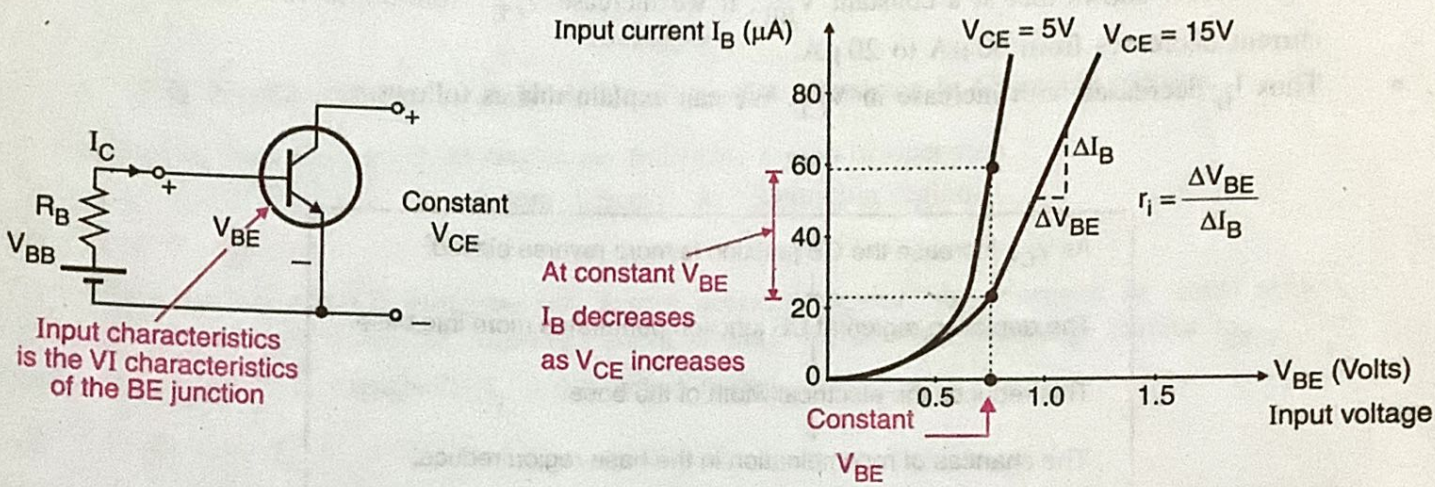

(a) (b) Input characteristics of a transistor in the CE configuration

Fig. 10.18.1

- For CE configuration, I_B is the input current and V_{BE} is the input voltage.
- At constant output voltage V_{CE} the input characteristics of a n-p-n transistor is as shown in Fig. 10.18.1(b). The input characteristics also shows the effect of V_{CE}.

The important points about the input characteristics are as follows :

The input characteristics resembles the forward characteristics of a p-n junction diode. The reason is that B-E junction is a forward biased p-n junction.

Dynamic input resistance :

- The base current increases rapidly as the base-emitter voltage crosses the cut in voltage of the BE, p-n junction. The dynamic input resistance is defined as :

$$r_i = \left.\frac{\Delta V_{BE}}{\Delta I_B}\right|_{V_{CE}\ \text{constant}} \quad ...(10.18.1)$$

- Its value can be obtained from the input characteristics because "r_i" is equal to the reciprocal of slope of the input characteristics.
- The value of dynamic input resistance "r_i" is low for the CE configuration but it is not as low as that of CB configuration.

Effect of change in V_{CE} on the input characteristics :

- In CB configuration, we have seen the effect of change in V_{CB} on the input characteristics (Early effect).
- Let us see the effect of change in V_{CE} on the input characteristics.
- Fig. 10.18.1 shows that at a constant V_{BE}, if we increase V_{CE} from 5V to 15V then the base current decreases from 60 μA to 20 μA.
- Thus I_B decreases with increase in V_{CE}. We can explain this as follows.

As V_{CE} increase the CB junction is more reverse biased.
↓
The depletion region at CB junction penetrates more into base.
↓
This reduces the electrical width of the base.
↓
The chances of recombination in the base region reduce.
↓
Hence the base current will reduce

10.18.2 Output Characteristics : ➤➤➤ [Asked in Exam : Dec. 01, May 05 !!!]

- Output characteristics is a graph of output current versus output voltage plotted at constant values of input current. For CE configuration, the output current is I_C and output voltage is V_{CE}.
- This is a graph of output current (I_C) versus output voltage (V_{CE}) for various fixed values of the input current (I_B).
- The typical output characteristics of a n-p-n transistor operating in the CE configuration are as shown in Fig. 10.18.2.
- As shown in Fig. 10.18.2, there are three regions of operation namely the cutoff region, active region and saturation region.

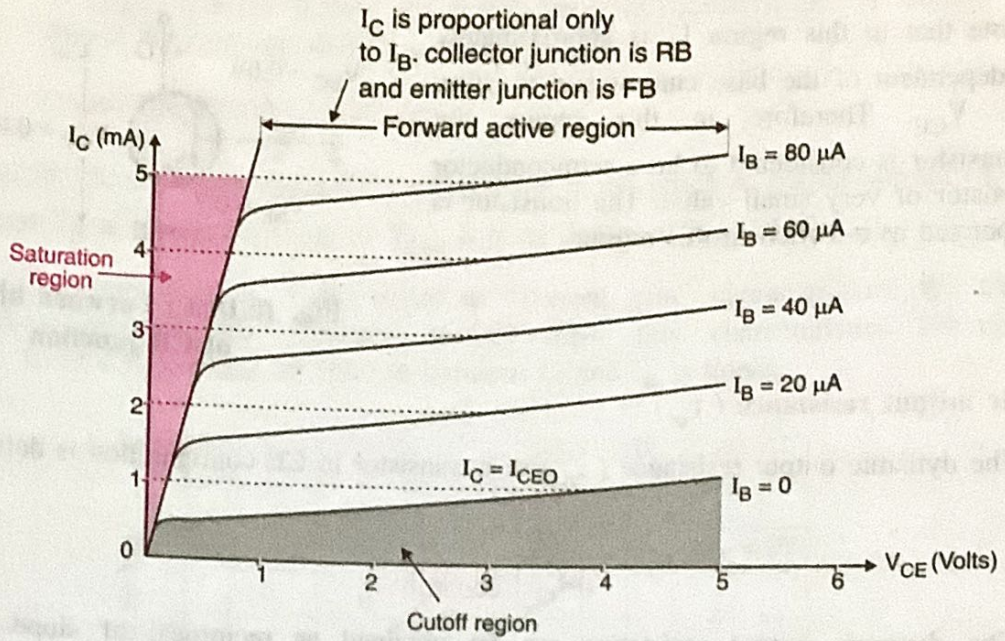

Fig. 10.18.2 : Output characteristics of a n-p-n transistor in CE configuration

The transistor can operate in any of the following region of operation :

1. Cut off region 2. Active region 3. Saturation region.

(1) Cutoff region :

Both the BE and CB junctions are reverse biased to operate the transistor in cutoff region. The base current $I_B = 0$ and the collector current is equal to the reverse leakage current I_{CEO}. The region below the characteristics for $I_B = 0$ is cutoff region.

(2) Active region :

- The B-E junction is forward biased, and C-B junction is reverse biased to operate the transistor in the active region.
- The collector current I_C increases slightly with increase in the voltage V_{CE}. However the collector current is largely dependent on the base current I_B.
- At a fixed value of V_{CE}, if I_B is increased, then it will cause I_C to increase substantially.
- This is because $I_C = \beta_{dc} I_B$. This relation is true only for the active region of operation.

(3) Saturation region :

- The BE junction as well as the collector junction must be forward biased to operate the transistor in its saturation region.
- The collector base junction can be forward biased if and only if V_{CE} drops down to about 0.2 volts. Because then $V_{BE} = 0.7$ volts will forward bias the CB junction.
- This is as shown in Fig. 10.18.3. Usually the saturation voltage of a transistor, $V_{CE(sat)}$ is between 0.1 to 0.3 volts.

- The collector current increases rapidly with increase in V_{CE} as shown in Fig. 10.18.2.
- Note that in this region I_C is approximately independent of the base current and function of V_{CE}. Therefore in this region the transistor is considered to be a semiconductor resistor of very small value. The transistor is operated as a switch in this region.

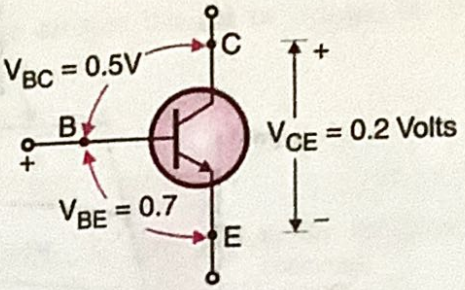

Fig. 10.18.3 : Forward biasing of CB junction

(4) Dynamic output resistance (r_o) :

- The dynamic output resistance (r_o) of a transistor in CE configuration is defined as :

$$r_o = \left.\frac{\Delta V_{CE}}{\Delta I_C}\right|_{\text{constant } I_B} \quad ...(10.18.3)$$

- The dynamic output resistance can be obtained as reciprocal of slope of output characteristics. Its value is large in the active region because ΔI_C in this region is very small. However value of r_o will be very small in the saturation region. This is because ΔI_C in that region is large for a small value of ΔV_{CE}.

(5) Definition of β_{ac} :

- We have already defined β_{dc} as :

$$\beta_{dc} = \frac{I_C}{I_B}$$

- The value of β_{dc} can be obtained from the output characteristics. At any point on the characteristics we can calculate β_{dc} by taking the ratio of I_C and I_B at that point.
- Now let us define AC beta of a transistor as :

$$\beta_{ac} = \left.\frac{\Delta I_C}{\Delta I_B}\right|_{V_{CE} \text{ constant}} \quad ...(10.18.4)$$

- Thus the value of ac beta can be obtained at a constant value of V_{CE} from the output characteristics. The values of β_{dc} and β_{ac} are nearly the same.

(6) Maximum V_{CE} and breakdown :

- In the active region the collector junction is reverse biased, so there is a limit on the maximum value of V_{CE}.
- If V_{CE} exceeds this maximum value, collector junction will breakdown due to the punch through effect discussed earlier.

- A large current will flow which will generate excessive heat to damage the transistor. Hence for safe operation $V_{CE} < V_{CE(max)}$.

10.18.3 Transfer Characteristics :

- Transfer characteristics for a CE configuration is the graph of output current (I_C) versus input current I_B at a constant value of V_{CE}. It is as shown in Fig. 10.18.4.
- Transfer characteristics is also called as "current gain" characteristics. We can measure the current gain of the transistor directly from this characteristics. The characteristics in Fig. 10.18.4 shows that the relation between I_C and I_B is linear.

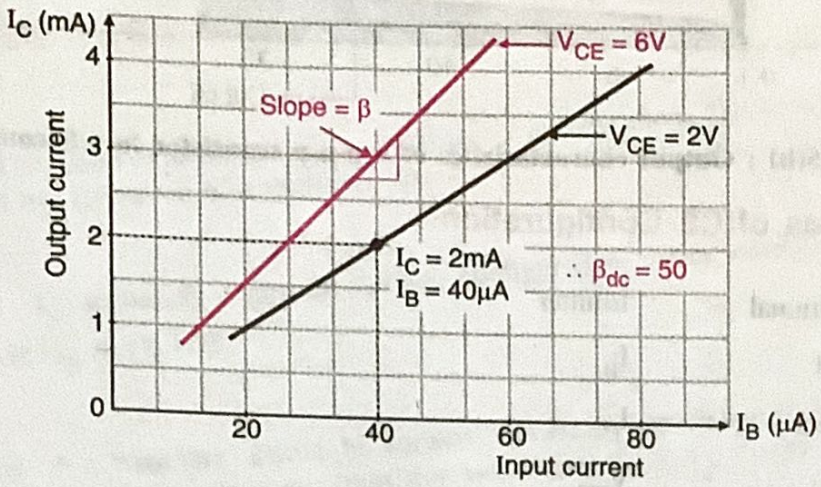

Fig. 10.18.4 : Transfer characteristics for CE configuration

- The slope of this characteristics gives us the value of current gain β of the transistor in CE configuration.

10.18.4 Output Characteristics of a p-n-p Transistor in C.E. Configuration :

- Fig. 10.18.5(a) shows the biasing of a p-n-p transistor in the CE configuration. It is biased to operate in the active region.
- Note that V_{CE} is negative. The output characteristics is as shown in Fig. 10.18.5(b).
- Note that the characteristics has the same shape as that of an n-p-n transistor.

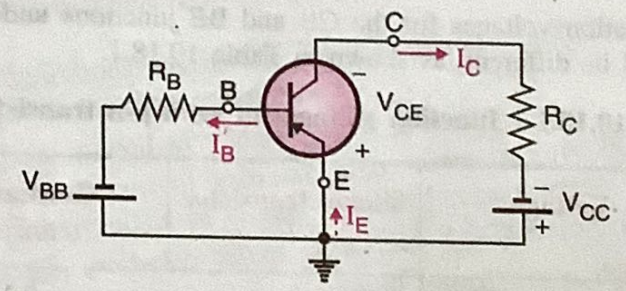

Fig. 10.18.5(a) : p-n-p transistor in CE configuration

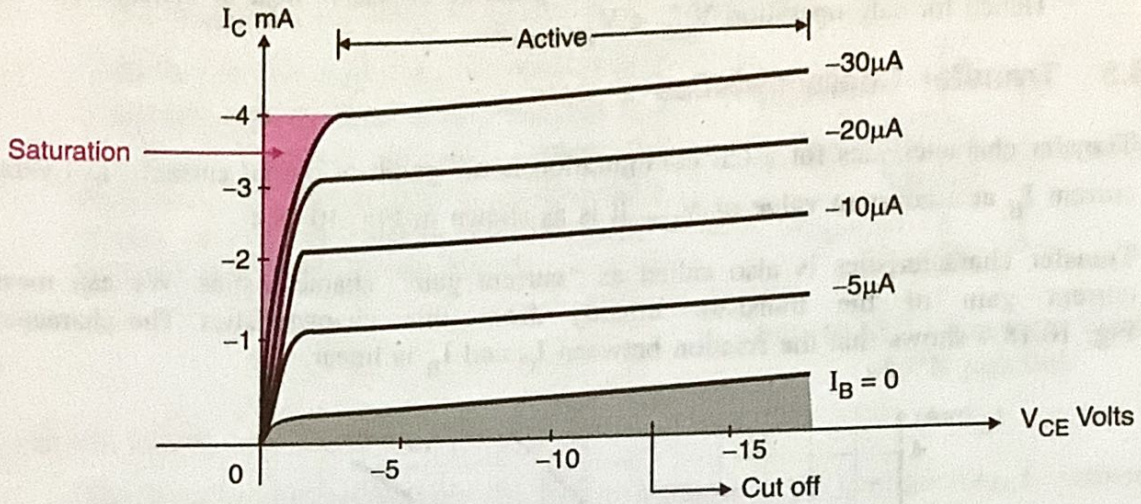

Fig. 10.18.5(b) : Output characteristics of a p-n-p transistor in CE configuration

10.18.5 Features of CE Configuration :

- Common terminal : Emitter
- Input current : I_B
- Output current : I_C
- Input voltage : V_{BE}
- Output voltage : V_{CE}
- Current gain : β_{dc} High
- Voltage gain : Medium
- Input resistance : Moderate (1.1 kΩ)
- Output resistance : High (40 kΩ)
- Applications : As audio amplifiers

10.18.6 Typical Junction Voltages :

- The values of junction voltages for the CB and BE junctions under the cut-off, saturation and active regions will be different, as shown in Table 10.18.1.

Table 10.18.1 : Junction voltages of an n-p-n transistor at 25°C

Voltage	Silicon transistor	Germanium transistor
V_{BE} (cut-off)	0	– 0.1 V
V_{BE} (cut in)	0.5V	0.1V

Voltage	Silicon transistor	Germanium transistor
V_{BE} (active)	0.7V	0.2V
V_{BE} (saturation)	0.8V	0.3V
V_{CE} (saturation)	0.2V	0.1V

- The voltages given in Table 10.18.1 are for an n-p-n transistor at 25°C . For a p-n-p transistor the values will remain the same but the sign should be reversed.

10.18.7 Standard Tests for Saturation, Cutoff and Active Regions :

Tests for saturation :

It is often important to know whether or not a transistor is in saturation. The two tests to be carried out to decide about the saturation of a transistor are :

Test No. 1 :

Determine I_C and I_B separately from the circuit configuration under consideration. The transistor is in saturation if $|I_B| \geq |I_C| / \beta$.

Test No. 2 :

Both the junctions of a transistor should be forward biased for operation in the saturation region. Measure V_{CB}. If it is positive for p-n-p transistor and negative for n-p-n transistor then the transistor is in saturation.

Test for active region :

Measure the voltages across the BE junction and CB junction. If V_{BE} = 0.7V i.e. if it is forward biased and if V_{BC} is negative (CB junction reverse biased) then the transistor is in active region.

Test for cutoff region :

If V_{BE} is less than 0.5V and V_{CB} is negative, then both the junctions remain off and the transistor is in cutoff region.

10.18.8 Why is CE Configuration Most preferred Configuration ?

Out of the three configurations discussed, the CE configuration is the most popular and widely used configuration. The reasons are as follows :

1. It has a high voltage gain as well as a high current gain.
2. As voltage gain as well as current gain are high, it has a very high power gain. This is because, power gain is the product of voltage gain and current gain.
3. The CE configuration has moderate values of R_i and R_o. Therefore many such stages can be coupled to each other without using any additional impedance matching circuits. Due to this automatic impedance matching, maximum power transfer will take place from one stage to the other.

10.19 Specifications of a Transistor :

- Most data sheets categories the transistor specifications into the following three categories :
  1. Maximum ratings
  2. Thermal characteristics
  3. Electrical characteristics
- Important specifications of a transistor are as follows :

1. $V_{CE\,(max)}$	2. $I_{C\,(max)}$	3. V_{CEO}
4. I_{CEO}	5. $V_{CE\,(breakdown)}$	6. Power dissipation
7. $V_{CE\,(sat)}$	8. α and β	

10.20 Transistor Applications :

Some of the important applications of a transistor are as follows :

1. Amplifiers
2. Switching circuits
3. Oscillators
4. Waveshaping circuits
5. Logic circuits
6. Timers and multivibrator
7. Delay circuits.

10.21 University Questions with Answers :

Q. 1 Explain the input and output characteristics of a N-P-N transistor in common emitter configuration. Clearly mark various regions on the characteristics. Show how different parameters can be determined from the above characteristics. **(Dec. 2001, 8 Marks)**

(Sections 10.18.1 and 10.18.2)

Q. 2 Define and derive the relation between α and β of transistor. **(Dec. 2002, 3 Marks)**

(Sections 10.17.1, 10.17.2 and 10.17.3)

Q. 3 Give the doping profile of BJT. Why so ? **(Section 10.13)** **(Dec. 2002, 3 Marks)**

Q. 4 Draw the circuit-diagram to plot the input and output characteristics of BJT in CE configuration, plot the curves and explain, and also explain the different operating regions.

(Sections 10.18.1 and 10.18.2) **(May 2005, 10 Marks)**

❑❑❑