Differential compound generators :

This type of generators are very rarely used, due to their drooping load characteristics. One of the important applications is electric arc welding.

7.10 Basic Construction of a DC Motor :

➤➤➤ [Asked In Exam : Dec. 06 !!!]

- The basic construction of a DC motor is same as that of a DC generator. (as discussed in Section 7.5).
- So the DC motor also, consists of two windings namely field winding and armature winding.
- The field winding is stationary and armature winding can rotate. This is same as the DC generator.
- The main difference is that in DC motors we connect the field winding as well as armature winding to DC supply.
- The field current produces magnetic flux in the air gap between the armature and field windings. And the current carring conductor i.e. armature winding is placed in this magnetic field. This is shown in Table 7.10.1.

Table 7.10.1 : Connections and operation of field and armature windings for a DC motor and a DC generator.

Sr. No.	Name of the winding	Connection / operation	
		DC generator	DC motor
1.	Field winding (stationary)	Connected to external DC supply. Produces magnetic field in the air gap between field and armature	Connected to external DC supply. Produces magnetic field in the gap between field and armature.
2.	Armature winding (Rotary winding)	Connected to the electrical load. We get electrical energy from the armature.	Connected to external DC supply. Armature rotates in the magnetic field to produce mechanical power.

7.11 Principle of Operation of a DC Motor :

➤➤➤ [Asked in Exam : May 05, Dec. 06 !!!]

- Then operating principle of a DC motor can be stated as follows :

When a current carrying conductor is placed in a magnetic field, it experiences a force.

- In case of a DC motor, the magnetic field is developed by the field current i.e. the current flowing in the field winding.
- The armature winding is connected to an external dc source, hence it plays the role of the current carrying conductor placed in the magnetic field.
- Due to the force exerted on it when placed in the magnetic field, it starts rotating.
- The direction of rotation depends on the direction of magnetic field produced by the field winding as well as the direction of armature current. The direction of rotation is decided by Fleming's left hand rule.

7.11.1 Direction of Rotation of the Motor :

The direction of rotation of a motor depends on the direction of force exerted on the armature winding, and the direction of force experienced by a current carrying conductor is given by Fleming's left hand rule.

Statement of Fleming's left hand rule : ➤➤➤ [Asked in Exam : Dec. 05]

- It states that if the first three fingers of the left hand are held mutually at right angles to each other and if the index finger indicates the direction of the original field, and if the middle finger indicates the direction of current flowing through the conductor, then the thumb indicates the direction of force exerted on the conductor. This is shown in Fig. 7.11.1(a).

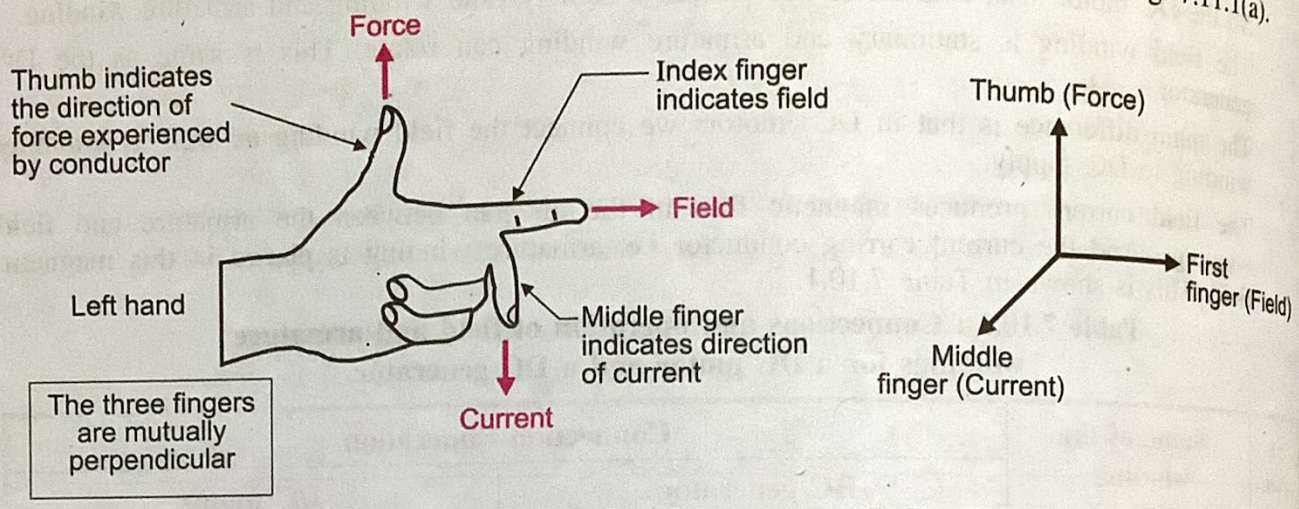

(a) Fleming's left hand thumb rule **(b) Simplified presentation**

Fig. 7.11.1

- Fleming's left hand rule is illustrated in a simplified manner in Fig. 7.11.1(b).
- The direction of force exerted on the current carrying conductor i.e. armature under different operating conditions is shown in Fig. 7.11.2.

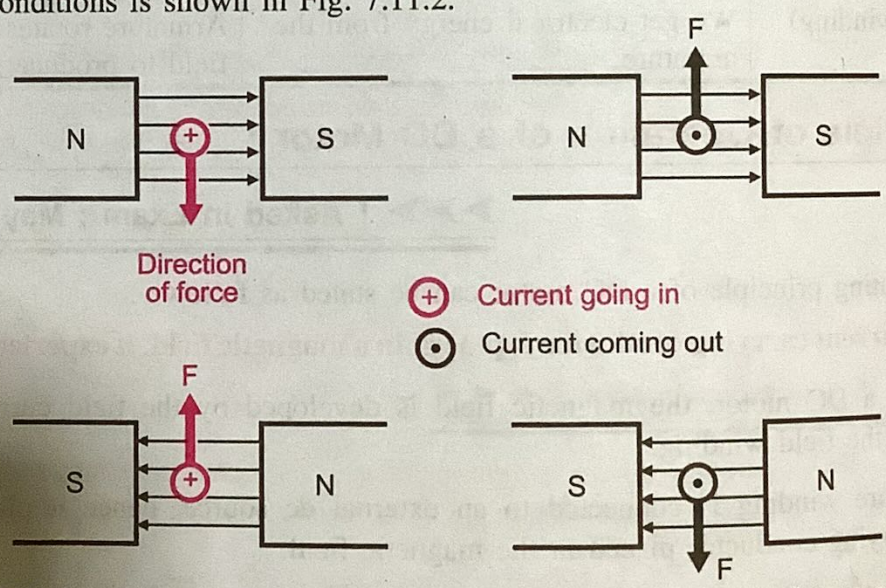

Fig. 7.11.2 : Direction of force exerted on the current carrying conductor

Conclusions :

Some of the important conclusions drawn from Fig. 7.11.2 are as follows :

1. The direction of force (F) depends on the direction of magnetic field as well as the direction of the current through the conductor.

- Hence the direction of force remains unchanged, if we reverse the directions of field and current simultaneously.
- But if the direction of either field or the current only is reversed, then the direction of force will also be reversed.

Change in direction of rotation :

- Hence to change the direction of rotation of a motor, it is necessary to change either the direction of the field produced by the field winding or the direction of the current flowing through the armature conductors.
- The direction of magnetic field can be reversed by reversing the direction of the field current. This is possible by reversing the polarity of the DC supply connected to the field winding.
- The direction of armature conductors also can be reversed by reversing the polarity of external dc supply connected across the armature winding.
- In a practical motor, the permanent magnets are replaced by a field winding which produces the magnetic flux, and the armature conductors which are placed on the periphery of the armature drum, will experience a force.
- This twisting force is called as the torque due to which the dc motor starts rotating.

7.11.2 Back EMF and its Significance :

➤➤➤ **[Asked in Exam : May 06 !!!]**

- When the armature winding of a dc motor starts rotating in the magnetic flux produced by the field winding, it cuts the lines of magnetic flux.
- Hence according to the Faraday's laws of electromagnetic induction, there will be an induced emf in the armature winding.
- As per the Lenz's law, this induced emf acts in opposite direction to the armature supply voltage. Hence this emf is called as the back emf and it is denoted by E_b.
- The back emf thus gets produced due to the generating action that we have discussed earlier and expressed mathematically as,

$$E_b = \frac{P \phi N Z}{60 A} \text{ Volts.}$$

- The back emf is shown schematically in Fig. 7.11.3(a). Let the dc voltage applied to the armature be V volts and let the armature resistance be R_a, then the equivalent circuit including the back emf is shown in Fig. 7.11.3(b).

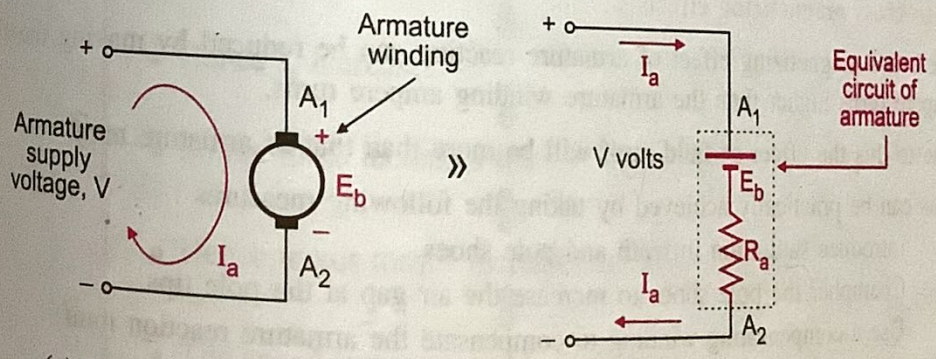

(a) Back emf (b) Equivalent circuit

Fig. 7.11.3

7.11.3 Armature Reaction :

- When the armature winding of a dc machine carries current the armature winding produces its own mmf known as **armature reaction**.

- Note that in dc generator the armature current flows due to induction whereas in dc motor it flows due to conduction.
- The air gap between armature and field is now acted upon by the resultant of two mmfs namely the field ampere turns and the armature ampere turns.
- Therefore the air gap flux density will get distorted.

Cross-magnetizing effect :

- Due to armature reaction, the flux in the air gap gets strengthened at one end of each main pole and weakens at the other end.
- This is called as cross magnetizing effect of armature reaction.
- The cross magnetizing effect distorts the air gap flux density distortion.

Demagnetizing effect :

- In cross magnetizing, the increase in flux strength at one end of the pole is equal to decrease in flux at the other end. So there is no loss of flux/pole.
- But if the main pole excitation is such that iron is in the saturated region which is normally the case for practical machines, then the increase in flux density at one end due to armature reaction is not same as reduction in flux density at the other end.
- In fact amount of increase in flux density is less than the amount of decrease at the other end.
- Hence there is a net reduction in flux/pole which is called as a demagnetizing effect.

Summary of armature reaction :

- In dc machines cross magnetization takes place due to armature reaction. It results in distorted flux density distribution but no change in flux/pole, if the iron core is unsaturated.
- But cross magnetization results in reduction of flux/pole if the iron core is in saturation. This effect is called as demagnetizing effect.
- The distortion of flux density has an adverse effect on commutation. This effect can be overcome by interpoles. The flux density distortion puts a limitation on the short time overloading capacity of the dc machine.

Remedy to cross magnetizing effects :

- The cross magnetizing effect of armature reaction can be reduced by making the field winding ampere turns higher than the armature winding ampere turns.
- Due to this the effect of field mmf will be more than that of armature mmf.
- This can be practically achieved by taking the following measures :
  1. Introduce saturation in teeth and pole shoes.
  2. Champher the pole shoes to increase the air gap at the pole tips.
  3. Use a compensating winding to compensate the armature reaction mmf.

7.12 Voltage Equation of a DC Motor :

- As seen from Fig. 7.11.3(b), the armature supply voltage V has to overcome the opposition posed by the back emf E_b and some other voltage drops such as brush drop and the voltage drop across R_a.

- From Fig. 7.11.3(b) we can write that,

$$V = E_b + I_a R_a + V_{brush} \quad ...(7.12.1)$$

- But the voltage drop across the brushes is negligible.

$$\therefore \quad V = E_b + I_a R_a \quad ...(7.12.2)$$

- The expression for I_a is given by,

$$I_a = \frac{V - E_b}{R_a} \quad ...(7.12.3)$$

- Remember that the back emf E_b is always less than the armature voltage V. i.e. $E_b < V$, and the difference between V and E_b is very small under all the normal operating conditions.
- Thus the back emf E_b controls the armature current under the normal conditions. This point is explained as under.

Role of back emf in controlling armature current :

- Refer to the expression for I_a in Equation (7.12.3). In this equation the only variable quantity is back emf E_b.
- The back emf will automatically adjust value of I_a, so as to produce the required amount of torque.
- Remember that the point of equilibrium is reaches when the torque produced by the DC motor is exactly equal to the load torque T_L.

Effect of increase in load :

- When the mechanical load on the motor is increased
- ⇓
- The motor slows down. But E_b is proportional to speed.
- ⇓
- So the back emf E_b decreases.
- ⇓
- Hence I_a increases.
- ⇓
- So the force increases since $F = BI_a l$ Newton
- ⇓
- Hence motor torque increases and goes closer to T_L
- ⇓
- The speed increases and I_a decreases.

- Thus due to continuous, automatic adjustment of E_b, the motor will always draw an armature current which is just sufficient to produce the required increase in torque.

- Similarly the effect of reduction in load can be explained as follows :

Effect of reduction in load :

- If the mechanical load on the motor shaft is reduced.

⇩

- The motor torque is higher than the load torque.

⇩

- So the motor speed tends to increase.

⇩

- Hence back emf increases.

⇩

- So I_a decreases.

⇩

- This will reduce motor torque.

⇩

- This will stop the increase in speed and bring the motor into equilibrium

- Thus the back emf ensures that the reduction in torque takes place quickly.
- In this way the back emf E_b automatically controls the magnitude of armature current to meet the changing load requirements. This is the practical importance of back emf.

7.13 Power Equation of a DC Motor :

- Let us repeat the Equation (7.12.2), to write

$$V = E_b + I_a R_a$$

- Multiply both the sides by I_a to get,

$$V I_a = E_b I_a + I_a^2 R_a \quad \text{...(7.13.1)}$$

- This expression is known as the power equation of a DC motor. The significance of the power equation is explained as follows :

$$\underbrace{V I_a}_{} = \underbrace{E_b I_a}_{} + \underbrace{I_a^2 R_a}_{}$$

→ Power loss taking place in armature winding.

→ Electrical equivalent of the mechanical power produced by the dc motor.

→ Electrical power supplied to the armature.

Fig. 7.13.1 : Significance of power equation

- In this expression $V I_a$ represents the electrical power supplied to the armature winding and $I_a^2 R_a$ is the power loss taking place in the armature winding.

$$\therefore \quad E_b I_a = V I_a - I_a^2 R_a$$

- Thus $E_b I_a$ = (Input power − Power loss) ...(7.13.2)
- Hence $E_b I_a$ represents the electrical equivalent of the gross mechanical power produced by the DC motor.

$$\therefore \quad \text{Gross mechanical power } P_m = E_b I_a \qquad ...(7.13.3)$$

7.14 Torque Equation of a DC Motor :

- We know that the relation between the torque and power is as follows.

$$P = T \times \omega \text{ ... where } \omega = \frac{2\pi N}{60} \text{ rad/sec is the angular velocity}$$

- Let $T = T_a$ = Gross torque = Torque developed by armature and $P = P_m$ = Gross mechanical power developed by the motor.

$$\therefore \quad P_m = T_a \times \omega \qquad \therefore \quad E_a I_a = T_a \times \frac{2\pi N}{60}$$

Substitute $E_a = \dfrac{P \phi N Z}{60 A}$ to get

$$\frac{P \phi N Z}{60 A} \times I_a = T_a \times \frac{2\pi N}{60}$$

$$\therefore \quad T_a = \frac{P \phi Z}{2\pi A} \times I_a = 0.159 \frac{PZ}{A} \phi I_a \qquad ...(7.14.1)$$

This is known as the torque equation of a dc motor. The torque is measured in N-m.

- P, Z, and A are constants hence we can say

$$T_a \propto \phi I_a \qquad ...(7.14.2)$$

- Thus the torque produced by a dc motor is proportional to the main flux ϕ as well as the armature current I_a.

$$\therefore \quad T = K_a \phi I_a \qquad ...(7.14.3)$$

where K_a is the armature constant.

7.15 Circuit Model of a DC Motor :

- Fig. 7.15.1 shows the circuit model of a DC motor. It is very similar to that of a DC generator but slightly different.
- Here I_a flows in opposite direction to induced emf E. The induced emf is called as the back emf E_b and $V > E_b$.

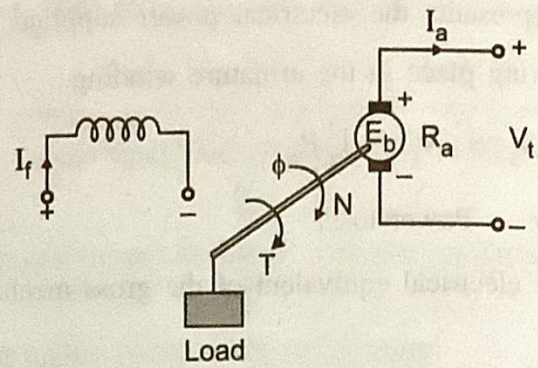

Fig. 7.15.1 : Circuit model of a DC motor

- The expression for terminal voltage is

$$V = E_b + I_a R_a \quad ...(7.15.1)$$

- The electrical power converted to mechanical form is

$$P_{in}\ (\text{electrical})\,|_{net} = E_b I_a = P_{mech}\,(\text{out})\,|_{gross} \quad ...(7.15.2)$$

- The electrical input power is given by,

$$P_i = V \times I_a \quad ...(7.15.3)$$

- The difference between P_i and P_{in} (electrical) $|_{net}$ is equal to the armature copper loss.

$$\therefore \quad \text{Armature copper loss} = I_a^2 R_a = VI_a - E_b I_a \quad ...(7.15.4)$$

- And

$$P_{mech}\,(\text{out})\,|_{net} = \text{Shaft power}$$

$$= P_{mech}\,(\text{out})\,|_{gross} - \text{Rotational loss} \quad ...(7.15.5)$$

- The torque T has the same direction as that of the motor rotation as shown in Fig. 7.15.1 and the mechanical power is absorbed by the mechanical load.

7.16 Types of DC Motors (Classification) :

➤➤➤ **[Asked in Exam : Dec. 06 !!!]**

Depending on the way of connecting the armature and field windings of a d.c. motor, the d.c. motors are classified as follows :

- DC series motor
- DC shunt motor
- Compound motors
- Separately excited dc motors

The compound motors are further classified as short shunt compound and long shunt compound motors. Let us discuss them one by one.

The classification of DC motors is shows in Fig. 7.16.1.

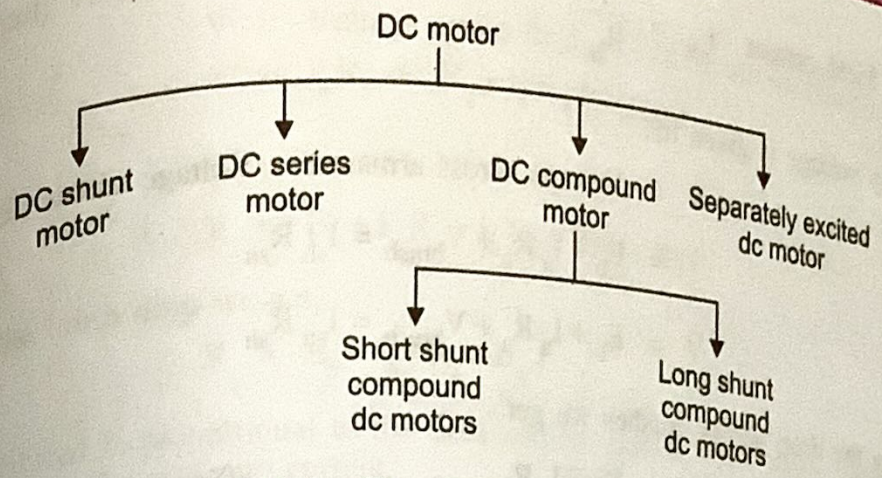

Fig. 7.16.1 : Classification of DC motors

7.16.1 DC Shunt Motor :

- In the DC shunt type motor, the armature and field winding are connected in parallel as shown in Fig. 7.16.2.
- The parallel combination of the two windings is connected across a common dc power supply.
- The resistance of the shunt field winding (R_{sh}) is always higher than that of the armature winding (R_a).
- This is because the number of turns for the field winding is more than that of the armature winding.

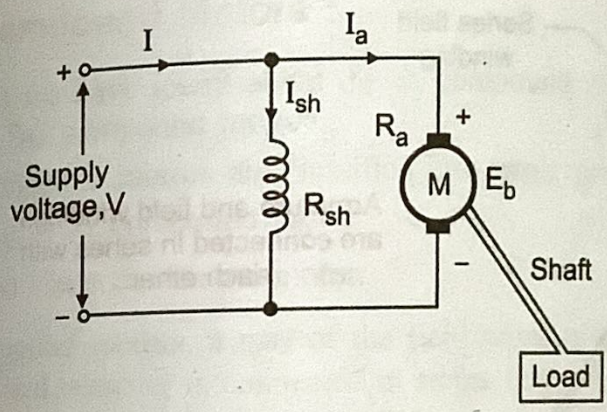

The armature and field winding are connected in parallel across the supply voltage.

Fig. 7.16.2 : DC shunt motor

- The cross-sectional area of the wire used for the field winding is smaller than that of the wire used for the armature winding.

Voltage and current relations :

- From Fig. 7.16.2 we can write that,

$$I = I_a + I_{sh}$$

Where I = Total current drawn from the voltage source

I_a = Armature current

I_{sh} = Field current.

$$\therefore \quad \text{Field current} \quad I_{sh} = \frac{V}{R_{sh}}$$

- The supply voltage is given by,

$$V = \text{Voltage across armature} = \text{Voltage across field.}$$

$$= E_b + I_a R_a + V_{brush} = I_{sh} R_{sh}$$

$$\therefore \quad V = E_b + I_a R_a + V_{brush} = I_{sh} R_{sh} \qquad \text{...(7.16.1)}$$

- Neglecting the drop across brushes we get

$$V = E_b + I_a R_a$$

- The field current I_{sh} remains essentially constant. Since V and R_{sh} both are constant. Hence the flux produced also remains constant, because field current is responsible for generation of flux.

$$\therefore \quad \phi \propto I_{sh}$$

- This is why the shunt motor is also called as the constant flux motors.

7.16.2 DC Series Motor : ➤➤➤ [Asked in Exam : Dec. 05 !!!]

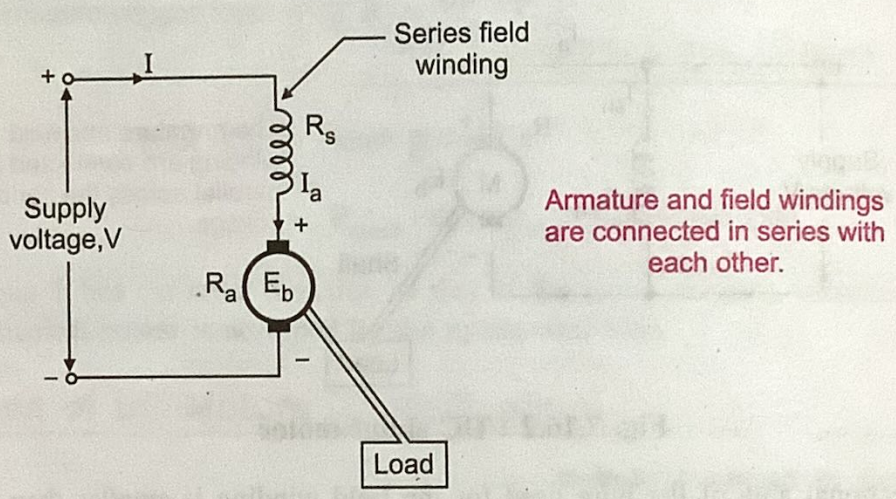

Fig. 7.16.3 : D.C. series motor

- In the D.C. series motor, the armature and field windings are connected in series with each other as shown in Fig. 7.16.3.
- The resistance of the series field winding (R_s) is much smaller as compared to that of the armature resistance (R_a).

Voltage and current relations :

- The total current I supplied by the supply voltage is same as the field current I_s and armature current I_a.

$$\therefore \quad I = I_s = I_a$$

- The total supply voltage V is given by,

$$V = \text{Voltage across field} + \text{Voltage across armature}$$
$$= I_s R_s + (E_b + I_a R_a + V_{brush})$$

But $I_s = I_a$

$$\therefore \quad V = E_b + I_a R_a + I_a R_s + \text{Brush drop.}$$

Neglecting the brush drop we get,

$$V = E_b + I_a (R_a + R_s)$$

- The flux produced is proportional to the field current. But in series motor, the field current is same as armature, the armature current.

$$\therefore \quad \phi \propto I_a$$

- Since the armature current flows through the series field winding, the flux is proportional to the field current I_s as well.

$$\therefore \quad \phi \propto I_s$$

- The armature current I_a and hence the field current I_s will be dependent on the load. With increase in load I_a and I_s will increase.
- Hence the flux ϕ does not remain constant. So the DC series motor is not a constant flux motor.

7.16.3 DC Compound Motors :

- In chapter 1 we have learnt about the ac compound generator. On the same lines now we will discuss the DC compound motors.
- The DC compound motors are classified into two types :
  1. Long shunt compound motor
  2. Short shunt compound motor.
- In the compound motors, a part of the field winding is connected across the armature and the remaining field winding is connected in series with the armature.
- Classification of compound dc motors is shown in Fig. 7.16.4.
- The long shunt and shunt compound dc motor are further classified into two subclasses namely the **cumulative compound motor and differential compound motors**.

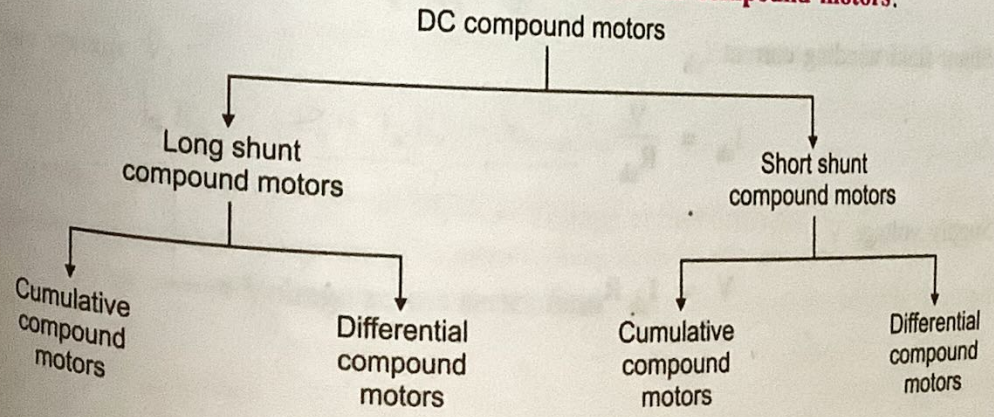

Fig. 7.16.4 : Classification of compound dc motors

7.16.4 Long Shunt Compound Motor :

- The connection of various windings in the long shunt compound dc motor is shown in Fig. 7.16.5.
- Note that the shunt field winding is connected across the series combination of the armature and series field winding.

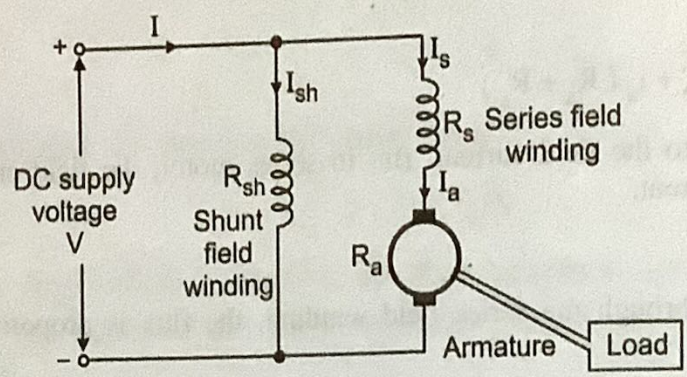

Shunt field is connected across the series combination of armature and series field winding

Fig. 7.16.5 : Long shunt compound dc motor

- The mechanical load is coupled to the shaft of the motor.
- The resistances of various windings are as follows :

  Armature winding : R_a

  Series field winding : R_s

  Shunt field winding : R_{sh}

- The voltage and current equations for the long shunt compound motor can be obtained by referring to Fig. 7.16.5 as follows :

Voltage and current equations :

- Total current drawn from the dc power supply is I.

$$I = I_{sh} + I_s \quad ...(7.16.2)$$

But $I_s = I_a$. Since series field and armature are in series

$$\therefore \quad I = I_{sh} + I_a \quad ...(7.16.3)$$

- Shunt field winding current I_{sh}

$$I_{sh} = \frac{V}{R_{sh}} \quad ...(7.16.4)$$

- Supply voltage V

$$V = I_{sh} R_{sh} \quad ...(7.16.5)$$

$$V = \underbrace{(E_b + I_a R_a + V_{brush})}_{\text{Voltage across the armature winding.}} + \underbrace{I_s R_s}_{\text{Voltage across the series field}}$$

$$\therefore \quad V = E_b + I_a R_a + V_{brush} + I_a R_s$$

But $I_s = I_a$

$$\therefore \quad V = E_b + I_a (R_a + R_s) + V_{brush} \quad ...(7.16.6)$$

7.16.5 Short Shunt Compound DC Motor :

- The interconnections between various windings of a DC short shunt compound motor are shown in Fig. 7.16.6.

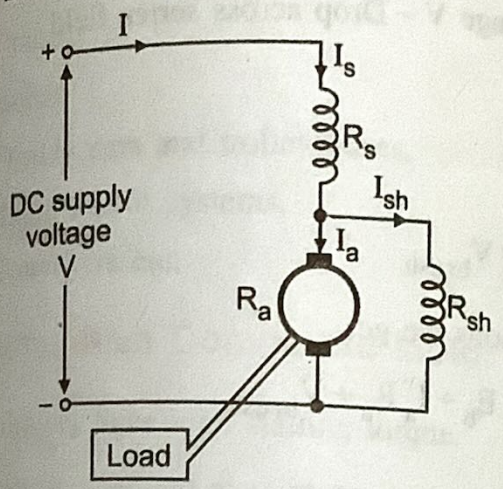

The shunt field is connected across the armature and their parallel combination appears in series with the series field.

Fig. 7.16.6 : Short shunt compound dc motor

- The armature and shunt field windings are connected in parallel with each other and their parallel combination is then connected in series with the series field winding.

Voltage and current relations :

- The total current I is equal to the current flowing through the series field winding.

$$\therefore \quad I = I_s \quad ...(7.16.7)$$

- The total current is given by,

$$I = I_s = I_a + I_{sh}$$

- Supply voltage V,

$$V = \underbrace{I_S R_S}_{\text{Voltage across series field}} + \underbrace{(E_b + I_a R_a + V_{brush})}_{\text{Voltage across armature}} \quad ...(7.16.8)$$

But $I_s = I$

$$V = IR_s + E_b + I_a R_a + V_{brush} \quad ...(7.16.9)$$

Or Supply voltage $= \underbrace{IR_S}_{\text{Voltage across series field}} + \underbrace{I_{sh} R_{sh}}_{\text{Voltage across shunt field}}$ ...(7.16.10)

- Voltage across shunt field winding :
- Referring to Fig. 7.16.6 we can write that,

V across shunt field = Supply voltage V – Drop across series field

$$\therefore V_{sh} = V - I_s R_s \quad ...(7.16.11)$$

- But V_{sh} = Voltage across armature

$$= E_b + I_a R_a + V_{brush} \quad ...(7.16.12)$$

- Equating the RHS of the above two expressions we get,

$$V_{sh} = V - I_s R_s = E_b + I_a R_a + V_{brush} \quad ...(7.16.13)$$

- Current through the shunt field winding,

$$I_{sh} = \frac{V_{sh}}{R_{sh}}$$

7.17 DC Motor Applications :

- Different motors described above are used in industry for various applications.
- Which type of motor will suit a particular load depends on the requirements of the load and characteristics exhibited by the motor. Applications of different motors are as under.

7.17.1 Shunt Motor Applications :

- Characteristics of shunt motor described in previous section indicate that it is a nearly constant speed motor having its starting torque (torque at N = 0) 30% to 40% more than its rated torque also, speed of shunt motor can be adjusted over a wide range.
- Therefore, such a motor can be used for the following applications :
  1. Various machine tools such as lathe machines, drilling machines, milling machines etc.
  2. Printing machinery
  3. Paper machines

4. Centrifugal and reciprocating pumps
5. Blowers and fans etc.

7.17.2 Series Motor Applications :

- Series motor characteristics indicate that it develops very high starting torque and it has adjustable varying speed.
- Therefore, for any load which needs high starting torque, series motor is the only suitable drive.
- Series motors are very widely used for the following applications :
  1. Electric trains,
  2. Diesel, electric locomotives,
  3. Cranes,
  4. Hoists
  5. Trolley cars and trolley buses,
  6. Rapid-transit systems,
  7. Conveyers etc.

7.17.3 Cumulative Compound Motor Applications :

- These motors have high starting torque.
- They can be operated even at no loads as they run at a moderately high speed at no load.
- Hence cumulative compound motors are used for the following applications :
  1. Elevators
  2. Rolling mills
  3. Punches
  4. Shears
  5. Planers

7.17.4 Differential Compound Motors Applications :

- The speed of these motors will increase with increase in the load, which leads to an unstable operation.
- Therefore we cannot use this motor for any practical applications.

7.18 University Questions with Answers :

Q. 1 Derive from the basic principle an expression for the emf of a dc generator. **(Section 7.7)** (May 2004, 6 Marks)

Q. 2 Write a short note on : DC series motor. **(Section 7.16.2)** (Dec. 2005, 5 Marks)

Q. 3 What is Fleming's right hand rule ? and hence explain working principle of DC motors. **(Sections 7.4.1 and 7.11)** (May 2005, 5 Marks)

Q. 4 State Fleming's right hand and left hand rules. **(Sections 7.4.1 and 7.11.1)** (Dec. 2005, 2 Marks)

Q. 5 Write briefly : What is the back emf in motor ? **(Section 7.11.2)** (May 2006, 2 Marks)

Q. 6 Write note on : D.C. motor. **(Sections 7.10, 7.11 and 7.16)** (Dec. 2006, 5 Marks)

Q. 7 Write note on : EMF equation of D.C. machines. **(Section 7.7)** (May 2007, 5 Marks)

❑❑❑