Motion-Tracking Brillouin Microscopy Evaluation of Normal, Keratoconic, and Post–Laser Vision Correction Corneas

HONGYUAN ZHANG, LARA ASROUI, IMANE TARIB, WILLIAM J. DUPPS JR, GIULIANO SCARCELLI, AND J. BRADLEY RANDLEMAN

• PURPOSE: To characterize focal biomechanical differences between normal, keratoconic, and post–laser vision correction (LVC) corneas using motion-tracking Brillouin microscopy.

• DESIGN: Prospective cross-sectional study.

• METHODS: Thirty eyes from 30 patients (10 normal controls [Controls], 10 post-LVC, and 10 stage I or II keratoconus [KC]) had Scheimpflug and motion-tracking Brillouin microscopy imaging using a custom-built device. Mean, maximum (max) and minimum (min) Brillouin shift, spatial standard deviation, and max-min values were compared. Min values were correlated with local Brillouin values at multiple Scheimpflug imaging locations.

• RESULTS: Mean ($P < .0003$), min ($P < .00001$), spatial standard deviation ($P < .01$), and max-min ($P < .001$) were significantly different between the groups. In post hoc pairwise comparisons, the best differentiators for group comparisons were mean ($P = .0004$) and min ($P = .000002$) for Controls vs KC, min ($P = .0022$) and max-min ($P = .002$) for Controls vs LVC, and mean ($P = .0037$) and min ($P = .0043$) for LVC vs KC. Min (area under the receiver operating characteristic = 1.0) and mean (area under the receiver operating characteristic = 0.96) performed well in differentiating Control and KC eyes. Min values correlated best with Brillouin shift values at the thinnest corneal point ($r^2 = 0.871$, $P = .001$) and maximum keratometry value identified in the tangential curvature map ($r^2 = 0.840$, $P = .002$).

• CONCLUSIONS: Motion-tracking Brillouin microscopy effectively characterized focal corneal biomechanical alterations in LVC and KC and clearly differentiated these groups from Controls. Primary motion-tracking Brillouin metrics performed well in differentiating groups as compared with basic Scheimpflug metrics, in contrast to previous Brillouin studies, and identified focal changes after LVC where prior Brillouin studies did not. (Am J Ophthalmol 2023;254: 128–140. © 2023 The Author(s). Published by Elsevier Inc. This is an open access article under the CC BY-NC-ND license (http://creativecommons.org/licenses/by-nc-nd/4.0/))

Despite the general safety and efficacy of laser vision correction (LVC) procedures to correct refractive error and corneal cross-linking (CXL) treatments for progressive keratoconus (KC), a current critical unmet need is the ability to acquire direct, noninvasive, focal corneal biomechanical data in vivo. This data would allow for the development of more accurate LVC and CXL screening protocols and treatment algorithms, which would facilitate more individualized LVC or CXL treatment protocols and identify patients at risk of vision loss from ectatic corneal disease at an earlier stage before vision loss has occurred. The promise of these direct corneal biomechanical measurements has intrigued physicians for decades. This promise, to date, however, has remained elusive.

Currently available devices for corneal mechanical characterizations include the Ocular Response Analyzer (ORA; Reichert, Inc) and the Corneal Visualization Scheimpflug Technology (Corvis-ST; Oculus Optikgeräte GmbH). The ORA analyzes corneal 1-dimensional (1D) deformation dynamics during an air puff by measuring the reflection of an infrared beam off the corneal surface.[1] ORA metrics, particularly custom variables, correlate to KC severity[2,3] and refractive surgery screening in group population analysis,[4] but their sensitivity and specificity are insufficient to rely on for an individual screening basis.[5,6] The Corvis-ST also uses an air puff perturbation and measures the dynamic corneal response to this stimulus with 2D high-speed Scheimpflug scans of the horizontal meridian.[7] Data obtained from the Corvis technology have surpassed the ORA in efficacy;[8,9] however, this device has still shown limited utility in distinguishing less obvious clinical manifestations of KC.[10,11] Intrinsic limitations to this approach include the reliance on a corneal mechanical perturbation (via air puff), the interdependency with intraocular pressure, and various geometric factors including corneal thickness.[12] Finally, these approaches can only measure global tissue response, not focal alterations in corneal tissue stiffness.

AJO.com Supplemental Material available at AJO.com.
Accepted for publication March 11, 2023.

From The Cole Eye Institute, Cleveland Clinic (H.Z., L.A., I.T., W.J.D., J.B.R.); Cleveland Clinic Lerner College of Medicine of Case Western Reserve University (W.J.D., J.B.R.); Department of Biomedical Engineering, Case Western Reserve University (W.J.D.), Cleveland, Ohio; Fischell Department of Bioengineering, University of Maryland, College Park, Maryland (GS), USA

Cleveland Clinic Foundation Cole Eye Institute, 9500 Euclid Avenue, i32Cleveland, OH 44195 USA.; e-mail: randlej@ccf.org

© 2023 The Author(s). Published by Elsevier Inc.
This is an open access article under the CC BY-NC-ND license
(http://creativecommons.org/licenses/by-nc-nd/4.0/)

0002-9394/$36.00
https://doi.org/10.1016/j.ajo.2023.03.018

Brillouin microscopy, first introduced by Scarcelli and Yun,[13-15] offers an alternative approach to corneal biomechanical analysis: a nonperturbative, all-optical mechanical mapping of the cornea at high 3D resolution. Brillouin frequency shift is related to the longitudinal viscoelastic modulus, thus allowing direct estimation of longitudinal modulus from optical spectroscopy.[16] Intrinsically, Brillouin technology is not linked to a macroscopic deformation of the cornea; thus, the extracted metrics are not confounded by other corneal biophysical and geometrical factors.[17] Brillouin imaging has had success in evaluating regional differences in the keratoconic cornea[18,19] and in evaluating the relative impact of different CXL protocols ex vivo.[20-24] To date, however, viable in vivo analysis has proven more challenging.[25-28] Prior studies[26,27] have demonstrated limited efficacy for Brillouin microscopy to differentiate between normal corneas and early stages of KC, with Brillouin metrics performing worse than basic Scheimpflug morphologic metrics in distinguishing between the groups.

Accurate determination of corneal biomechanics after successful LVC has also proven challenging. Studies using the ORA[29] or Corvis-ST[30,31] devices have found significant reductions in overall corneal stiffness after laser in situ keratomileusis (LASIK). In contrast, Eltony and associates[28] evaluated patients undergoing LASIK and found no change in Brillouin frequency shift 1 month after LASIK. The authors concluded that, once hydration state normalizes, collagen fiber structure is unaltered and that material corneal properties are not significantly altered by LASIK. This finding is counterintuitive given the biomechanical impact of LASIK as measured by multiple techniques[32-36] and the likelihood of change in collagen fiber dynamics that occur when the anterior fibers are severed during LASIK flap creation and ablation of anterior stromal tissue, which is the primary load-bearing portion of the cornea.[37,38] These findings, if correct, would likely call into question the ability of Brillouin microscopy to evaluate clinically meaningful changes in corneal biomechanics rather than informing about the nature of the cornea after LVC.

Recently, we developed a 3D motion-tracking Brillouin microscope for in vivo corneal biomechanics mapping with 3 μm axial tracking accuracy using optical coherence tomography (OCT) and 10 μm lateral tracking accuracy using pupil tracking, which has enabled us to reconstruct depth-dependent Brillouin modulus distribution with a high spatial resolution.[39] Further, we improved Brillouin spectrometer calibration using rubidium absorption frequencies to enable superior reliability of comparison measurements. These enhancements, combined with digital image processing, have significantly improved our ability to map the human cornea in vivo with far greater accuracy than previous approaches.

The purpose of this paper is to determine the ability of novel motion-tracking Brillouin microscopy to characterize the 3D spatially resolved biomechanical differences between normal, keratoconic, and post-LVC corneas.

METHODS

This study was performed as part of an ongoing prospective trial conducted at the Cleveland Clinic Cole Eye Institute, listed on clinicaltrials.gov (NCT04598932), and approved by the Cleveland Clinic institutional review board. Patients recruited for this arm of the study were evaluated between September 2021 and August 2022.

Study inclusion criteria included patients aged 18 to 55 years who belonged to 1 of 3 groups as determined by routine clinical examination and corneal imaging: with (1) patients with normal corneas, who served as the control group (Controls); (2) patients with a history of successful and stable LVC, which included LASIK or photorefractive keratectomy (PRK) (LVC); and (3) patients with stage I or II KC. Patients included in the control group all presented for LVC evaluation and had normal slitlamp examinations, normal Scheimpflug and anterior-segment OCT imaging, including epithelial mapping, and were determined to be good candidates for all LVC procedures. Patients included in the LVC group all had successful surgery, 20/20 or better uncorrected acuity in both eyes at the time of evaluation, normal postoperative Scheimpflug imaging in both eyes, and had their refractive surgery at least 2 years before Brillouin measurements. Patients with KC were classified using the Amsler-Krumeich classification system.[40,41] Despite this classification system's known limitations, it has been used in prior Brillouin studies, so we used it for comparative purposes. Exclusion criteria included inadequate corneal imaging or corneal scarring that would impact results or inadequate Brillouin imaging. All patients underwent a full routine ocular examination that included visual acuity and slitlamp biomicroscopy as well as corneal imaging performed using Scheimpflug corneal tomography (Pentacam HR; Oculus Optikgeräte GmbH) in addition to Brillouin microscopic corneal imaging.

• **MOTION-TRACKING BRILLOUIN CORNEAL IMAGING:** Among scattered photons from a bio-sample, Brillouin photons, scattered by inherent density/pressure fluctuation, carry information of longitudinal modulus in the form of a frequency shift from the incident optical frequency.[42]

The relation between the Brillouin shift $\Delta\nu_B$ and the longitudinal modulus M' can be expressed as

$$\Delta\nu_B = \frac{2nV}{\lambda} = \frac{2n}{\lambda}\sqrt{\frac{M'}{\rho}}$$

where λ is the probing laser wavelength, n is the corresponding refractive index, V is the speed of sound, and

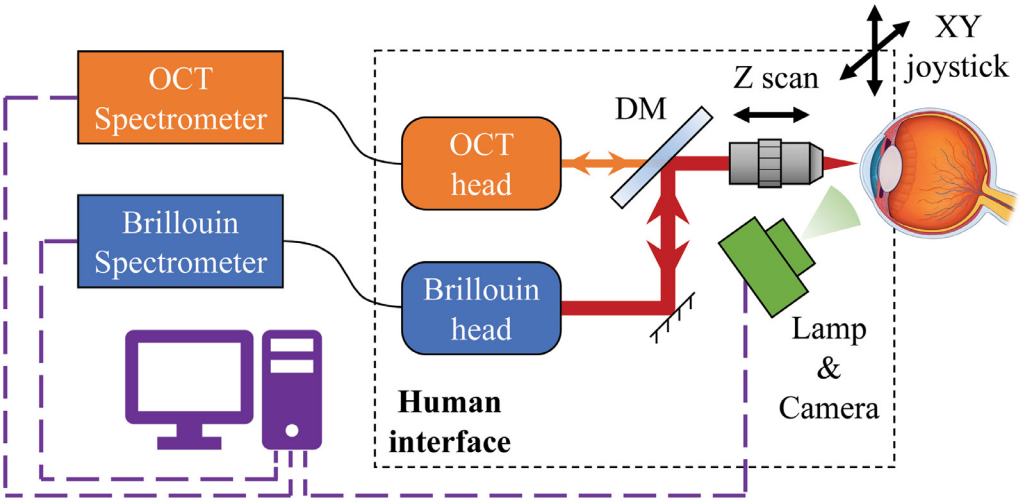

FIGURE 1. Schematic of the motion-tracking Brillouin microscope setup. The Brillouin and OCT spectrometers were placed on an optical table and connected to the human interface on a power table through optical fibers. Collimated beams from the OCT and the Brillouin heads shared a common path after the dichroic mirror. The objective lens, focusing input beams, and collecting scattered light were mounted on a motorized stage to accomplish programmable scanning. OCT = optical coherence tomography, DM = Dichroic Mirror.

ρ is the density. Although the refractive index and density vary spatially in the cornea, the ratio ρ/n^2 remains approximately constant according to the Gladstone-Dale relation,[43] which makes the Brillouin shift proportional to the longitudinal modulus.

The motion-tracking Brillouin microscopy system consists of a confocal Brillouin microscope for corneal modulus measurement, a custom-built OCT device for axial tracking, and a single-lens imaging system for in-plane pupil tracking (Figure 1). A small green LED bead was placed directly above the objective lens to use as a fixation device during scanning. The human interface is mounted on an ophthalmic slitlamp frame, enabling point of interest selection in 3 dimensions manually via a joystick. For each cornea, approximately 40 locations were measured within an 8-mm-diameter circle, with a 5-second motorized Z-scan at each location. The overall optical power was controlled to meet the requirements from American National Standard Institutes (ANSI Z136.1-2007). Full details on the device setup can be found in a previous publication.[44]

Even though 3D information was acquired during the Brillouin scan, 2D Brillouin maps were created to be comparative with the 2D geometrical maps typically used in clinical evaluations (Figure 2). To compress 3D data to 2D, Brillouin shifts within the anterior plateau region were averaged to represent the Brillouin shift at each measured point.[44] The anterior plateau region, representing the stiffest region of the cornea,[13,38] was defined as the corneal section containing the maximum Brillouin shift values. To identify the plateau region, linear fitting was applied to the plateau and the slope regions and the cross section of these 2 lines served as the end of the plateau.[39] The start point was determined by the tail of the slope region and the thickness measured by the OCT. Then, 2D interpolation was used to connect scattered measured points to create the 2D Brillouin maps. The anterior plateau region from which the local Brillouin shift value was obtained, represented as a percentage of total corneal thickness, varied slightly between the groups (Controls = 42.2% ± 2.7%, LVC = 35.3% ± 1.3%, KC = 35.1% ± 3.0%). From these 2D Brillouin maps, primary variables reported included mean Brillouin shift (mean), representing the average of all values in the map created by the 2D interpolation, maximum Brillouin shift (max), representing the highest (strongest, stiffest) Brillouin shift value measured, and minimum Brillouin shift (min), representing the lowest (softest, weakest) Brillouin shift measured. From these variables, spatial standard deviation (SSD) and max-min values were obtained. Scheimpflug metrics evaluated included K max (axial curvature), K mean (axial curvature), and thinnest pachymetry for group differentiation and K max (tangential curvature) and maximum anterior (front) and posterior (back) elevation locations using best-fit sphere reference surfaces for correlation with min Brillouin shift values.

- **STATISTICAL METHODS:**

Power analysis and sample size determination

In planning this study, we estimated the number of patients to investigate based on the primary end point of our study, the comparison of Brillouin means across categories, from

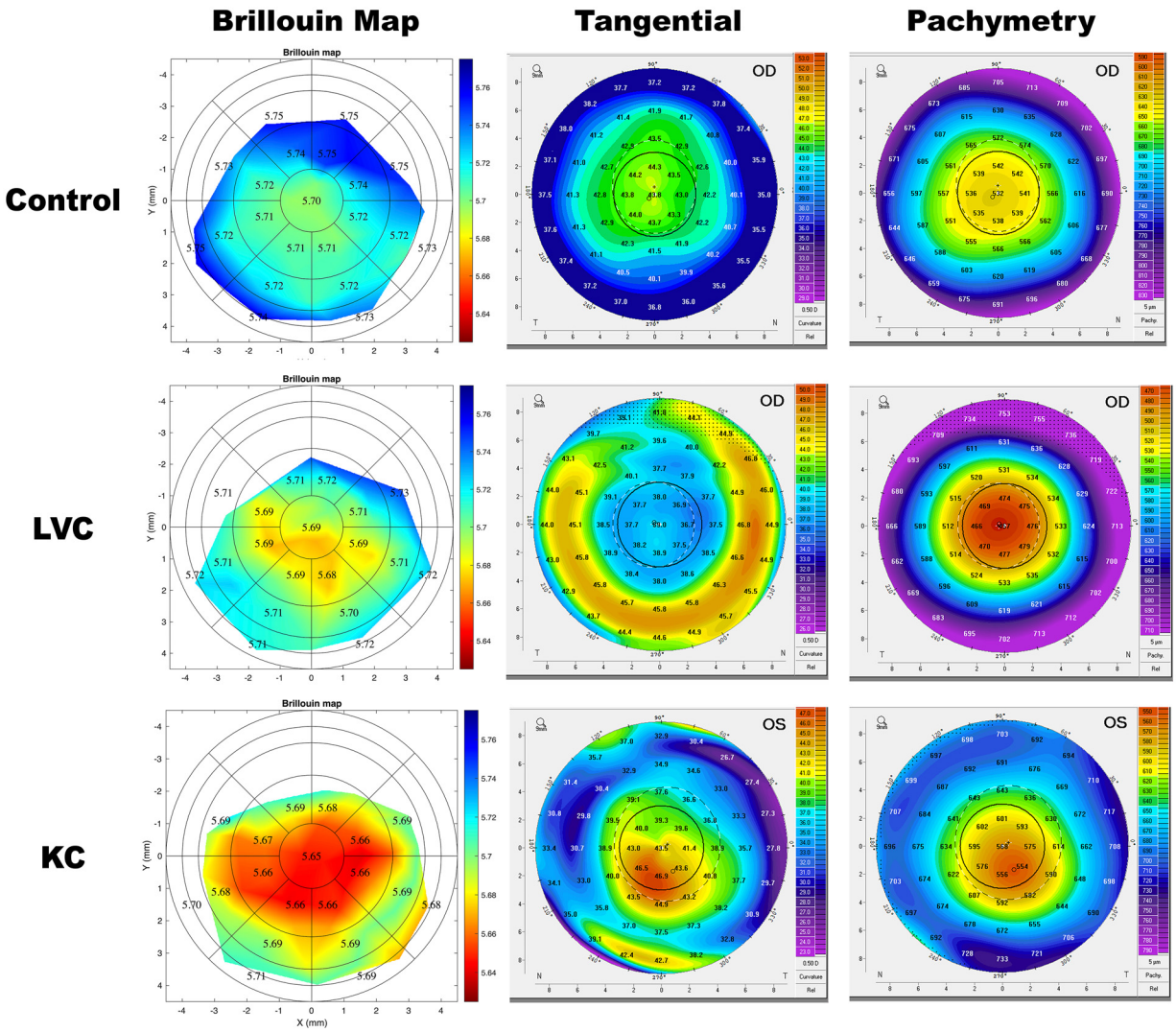

FIGURE 2. Composite image showing representative Brillouin maps (left column) for the Control (top row), LVC (middle row), and KC (bottom row) groups, along with their accompanying tangential curvature (middle column) and pachymetry (right column) maps from Scheimpflug imaging. Numeric values shown in the Brillouin maps are in GHz and display average values for each sector. The Control patient was a 33-year-old woman (thinnest pachymetry 532 μm, K mean 43.9 D, and K Max 45.0 D) who presented for refractive surgery evaluation and was determined to be a good LVC candidate. The LVC patient was a 32-year-old woman who had LASIK for −5.50 D SE refraction approximately 2 years before Brillouin imaging (postoperative thinnest pachymetry 452 μm, K mean 38.2 D, and K Max 42.0 D). The KC patient was a 21-year-old woman with stage I KC (thinnest pachymetry 551 μm, K mean 42.3 D, and K Max 46.2D). In the Control map, there is little variation in Brillouin shift values across the central cornea. In the LVC map, there is focal softening in the central portion of the map, with a minimum value of 5.69 GHz. In the KC map, there is more pronounced focal softening in the central portion of the map that involves a larger area than in the LVC map, with a minimum value of 5.65 GHz. D = diopters, KC = keratoconus, K Max = maximum keratometry value, LVC = laser vision correction.

previous literature data. Our analysis plan was to perform a comparison of KC and LVC to a common control group; thus we decided to perform analysis of variance with pairwise post hoc *t*-test comparisons with the Bonferroni correction. The choice of these parametric tests was justified by previous literature that showed that in the KC cornea Brillouin metrics were normally distributed with a standard deviation of 0.012 GHz,[26,27] and after LASIK Brillouin metrics were normally distributed with a standard deviation of 0.02 GHz.[28] To plan this study, we had to estimate the true difference between early KC and normal controls. In this respect, the critical shortcoming of previous studies was the lack of spatial coregistration of Brillouin measurements, that is, the resulting poor spatial accuracy of the Brillouin measurement location. This is an important effect in corneas that are spatially varying in x-y-z, and markedly so in diseased states, which translates into an averaging effect that masks the difference between early KC and normal. We estimated the strength of this effect by analyzing our data with and without coregistration, and we found that

this could induce up to 35 to 40 MHz accuracy error in the quantification. On the basis of Shao's measurements, we estimated the true regional difference in stages I and II to be at least approximately 20 MHz. For LVC, the clinical Brillouin literature was not useful in estimating the effect size because the lack of spatially accurate Brillouin measurements totally masked the highly localized reduction in modulus in previous studies. Thus, to estimate the true difference, we used ex vivo studies[38] and other modalities,[45] which reported an estimated decrease of 31% and 40% to 70% in modulus for LASIK. These data, after conversion, are consistent with our previous Brillouin studies ex vivo, which found a decrease of 35 MHz after flap cutting.[21] For KC comparison, if the true difference (effect size) in the experimental and control means is 20 MHz, and the standard deviation within groups is 12 MHz, evaluating 9 KC subjects and 9 control subjects would allow us to reject the null hypothesis that the population means of the KC and control groups are equal with power = 0.8 and type I error probability .016666 (to account for the Bonferroni correction of multiple comparisons and keep the familywise error to 0.05). For LVC comparison, targeting a true Brillouin shift difference of 35 MHz with a standard deviation of 20 MHz, 8 LVC subjects and 8 control subjects would be able to reject the null hypothesis that the population means of the LVC and control groups are equal with power = 0.8. Also in this case, we used a type I error probability of .016666 to maintain a familywise error of 0.05 after the Bonferroni correction of multiple comparisons. Given these considerations, we performed this study with N = 10 Controls, N = 10 KC, and N = 10 LVC, because it would be sufficiently powered to detect clinically meaningful differences between all groups evaluated.

After data collection, we performed secondary analysis on several other metrics derived from Brillouin maps; we thus performed power estimation on all studies (data shown in Supplemental Table 1). The vast majority of our studies were sufficiently powered despite the relatively low sample size.

Correlating Brillouin maps with Scheimpflug maps

On the basis of the 30 measured Brillouin maps, we performed an additional analysis to delve deeper into the spatial features of Brillouin data. The location of the min Brillouin shift, indicating the softest location in the cornea, could theoretically correspond to a variety of morphologic features identified in Scheimpflug imaging. The most likely candidates for this correlation include the thinnest point in the pachymetry map, location of the maximum anterior (front) or posterior (back) elevation on elevation maps, or the point of maximum anterior curvature as identified in axial or tangential curvature maps. To evaluate these potential correlations between softest point and morphologic features, we created overlay maps in photoshop to superimpose the Brillouin map (to scale) to identify the Brillouin shift value at each location determined by Scheimpflug imaging as identified using the large map view for the following maps: corneal thickness, elevation (front) with best-fit sphere reference shape, elevation (back) with best-fit sphere reference shape, axial curvature (front), tangential curvature (front). The maps automatically displayed the locations of interest, which facilitated analysis. With the sample size of N = 10 per group, these correlation studies had adequate power (>80%) assuming a correlation greater than 0.8.

Data analysis

Statistical analysis was performed using the Microsoft Excel (Microsoft Corp; MatLab, Mathworks) and SPSS (IBM) statistical programs. For each of the Brillouin metrics evaluated, a 1-way analysis of variance test was used to evaluate the difference in population means among the Control, LVC, and KC groups, followed by post hoc pairwise comparisons with the Bonferroni correction. Receiver operating characteristic (ROC) curves were generated to characterize the ability of various Brillouin metrics and the basic Scheimpflug metrics K max and thinnest pachymetry to distinguish, in separate analyses, between Control and KC eyes, between Control and LVC eyes, and between LVC and KC eyes. Scheimpflug K max and thinnest pachymetry were included in the analysis to allow comparison with prior Brillouin work where these variables were included in ROC curve analysis.[26] These analyses were performed using the SPSS software. Correlations between minimum Brillouin shift values and Brillouin shift values obtained at the aforementioned locations identified in Scheimpflug imaging were determined using the Spearman rank correlation testing using SPSS.

RESULTS

A total of 30 eyes were included in this analysis, with 10 eyes from 10 patients imaged in each group. Basic patient demographics are shown in Table 1. There were no significant differences in age between the groups. There were more males in the KC group than either the Control or LVC group, but this difference was not statistically significant. As anticipated, most other basic metrics, including keratometry and central thickness values, were significantly different between the groups. Demographic data for the LVC group are shown in Table 2. Preoperative manifest refraction spherical equivalent was −3.57 diopters (D) ± 1.84 D (−0.375 to −5.50 D), and patients had refractive surgery 5.5 ± 3.5 years (2-14 years) before Brillouin imaging. Preoperative Scheimpflug imaging was available for 7 eyes. Among the KC group, there were 6 eyes classified as stage I and 4 eyes classified as stage II. No stage III or IV eyes were evaluated.

There were no significant correlations found between motion-tracking Brillouin shift values and corneal pachymetry for any of the 3 groups (Table 3).

TABLE 1. Patient Demographics

Parameter	Normal	LVC	KC	*P* Value[a]
Patient age (y)	30.7 ± 7.2 (24-48)	36.8 ± 8.8 (30-52)	28.9 ± 8.3 (19-45)	.093
Sex (% male)	30	30	70	.07[b]
CCT (μm)	562.7 ± 29.8 (507-617)	485.2 ± 25.8 (450-535)	500.3 ± 39.2 (445-570)	<.001
Thinnest pachymetry (μm)	560.4 ± 29.2 (507-614)	483.5 ± 25.4 (450-533)	475.6 ± 45.8 (405-551)	<.001
K mean (D)	44.5 ± 1.6 (41.9-47.6)	41.4 ± 1.9 (38.5-43.8)	45.3 ± 3.2 (41.4-52.4)	.001
K Max (D)	45.4 ± 1.6 (43.4-48.1)	44.4 ± 2.3 (41.7-48.5)	54.4 ± 5.7 (46.2-66.1)	<.001

CCT = central corneal thickness, D = diopters, KC = keratoconus, K Max = maximum keratometry value, K mean = average (mean) keratometry value, LVC = eyes that have undergone laser vision correction.

[a] Analysis of variance.

[b] χ^2.

TABLE 2. Laser Vision Correction Patient Data

Patient	LVC Type	Age at Surgery (y)	Age at Brillouin (y)	Years Since LVC	MRx Sphere (D) Preoperatively	MRx Cyl (D) Preoperatively	MRx SE (D) Preoperatively	Ablation Depth (μm)	CCT Preoperatively (μm)	CCT Postoperatively (μm)
1	PRK	26	31	5	−4.00	0.50	−3.75	65	546	474
2	LSK	39	43	4	−5.25	0.25	−5.12	78	576	505
3	LSK	44	48	4	−1.00	1.25	−0.375	20	553	533
4	LSK	27	41	14	−4.75	1.50	−4.00	68	531	471
5	LSK	28	31	4	−1.50	0	−1.50	22	N/A	488
6	PRK	26	31	5	−5.25	0	−5.25	82	N/A	450
7	LSK	23	32	9	−5.50	0	−5.50	85	571	491
8	LSK	21	24	3	−3.00	0.50	−2.75	52	520	455
9	LSK	47	52	5	−2.50	1.00	−2.00	45	534	485
10	LSK	33	35	2	−5.50	0	−5.50	84	535	456

CCT = central corneal thickness, Cyl = cylinder, D = diopters, LSK = laser in situ keratomileusis, LVC = laser vision correction, MRx = manifest refraction, N/A = not available, PRK = photorefractive keratectomy, SE = spherical equivalent.

TABLE 3. Correlations Between Brillouin Shift Values and Corneal Thickness

Parameter (GHz)	Controls		LVC		KC	
	Correlation[a]	*P* Value	Correlation[a]	*P* Value	Correlation[a]	*P* Value
Mean	0.231	.522	0.439	.205	0.215	.550
Max	0.121	.738	0.070	.849	−0.104	.776
Min	0.190	.600	0.537	.110	0.676	.32

KC = keratoconus, LVC = laser vision correction, Max = maximum Brillouin shift, Mean = mean Brillouin shift, Min = minimum Brillouin shift.

[a] Pearson's correlation coefficient.

• **REGIONAL MOTION-TRACKING BRILLOUIN MICROSCOPY MAPS:** Representative en face Brillouin maps are shown in Figure 2. Brillouin maps from the entire cohort are included as Supplemental Figures 1 and 2. Table 4 shows the comparative Brillouin shift data for each population. There were significant differences between the groups for mean Brillouin shift, min Brillouin shift, Brillouin SSD, and max-min values. The spatial variations in Brillouin shift across the central cornea in the Control group were small, demonstrated by a low SSD, on the order of instrument precision (Table 4), whereas focal minimum values representing the softest/weakest portions of the cornea are obvious in both LVC and KC group maps. There are clear differences in regional Brillouin values between the 3 groups, as demonstrated by the significant differences in mean, min, SSD, and max-min values (Table 4). As expected, there were less significant differences between max Brillouin shift values, as these represented the unal-

TABLE 4. Motion-Tracking Brillouin Modulus Value Comparisons

Parameter (GHz)	Groups			*P* Values			
	Controls (C)	LVC	KC	ANOVA	C vs KC	C vs LVC	LVC vs KC
Mean	5.713 ± 0.015 (5.692-5.734)	5.707 ± 0.021 (5.684-5.756)	5.679 ± 0.015 (5.651-5.695)	.0003	.0004	.64	.0037
Max	5.746 ± 0.026 (5.708-5.780)	5.757 ± 0.019 (5.739-5.805)	5.724 ± 0.020 (5.682-5.748	.007	.089	.46	.0057
Min	5.696 ± 0.014 (5.679-5.722)	5.672 ± 0.026 (5.630-5.724)	5.641 ± 0.014 (5.614-5.654)	.000001	.000002	.0022	.0043
SSD	0.012 ± 0.005 (0.005-0.020)	0.019 ± 0.005 (0.008-0.028)	0.018 ± 0.005 (0.009-0.028)	.01	.03	.015	.95
Max-Min	0.049 ± 0.022 (0.025-0.091)	0.086 ± 0.019 (0.057-0.122)	0.083 ± 0.021 (0.049-0.120)	<.0011	.0047	.002	.94

ANOVA = analysis of variance, KC = keratoconus, LVC = laser vision correction, Max = maximum Brillouin shift, Max-Min = maximum Brillouin shift − minimum Brillouin shift, Mean = mean Brillouin shift, Min = minimum Brillouin shift, SSD = spatial standard deviation.

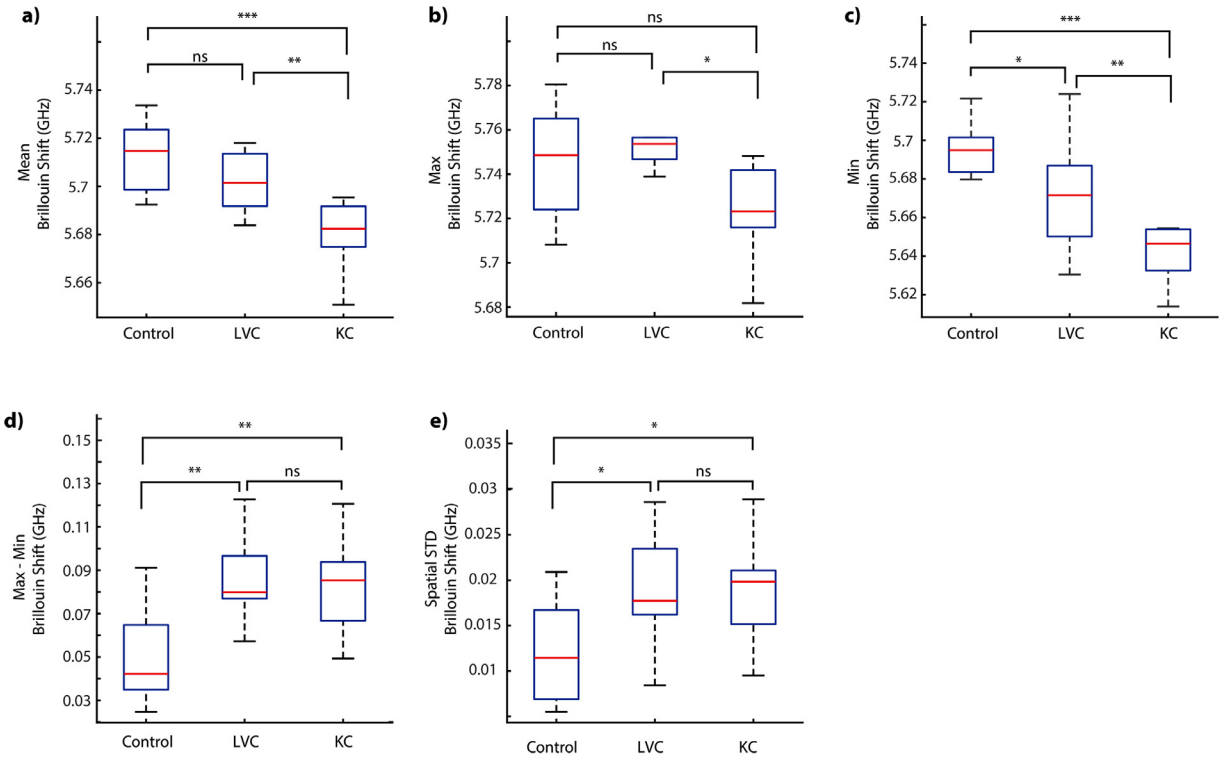

FIGURE 3. Box plots showing comparisons between groups with regard to (A) mean Brillouin shift, (B) max Brillouin shift (representing the stiffest location in the cornea, (C) min Brillouin shift (representing the softest location in the cornea), (D) max Brillouin shift minus min Brillouin shift values, and (E) spatial standard deviation of Brillouin shift values across the central 8 mm of the cornea. There are significant differences shown for mean, min, max-min, and spatial standard deviation Brillouin shift values between the Control and KC groups, significant differences for mean, max, and min Brillouin shift values between the LVC and KC groups, and significant differences for min, max-min, and spatial standard deviation Brillouin shift values between the Control and LVC groups. *P < .05, **P < .01, ***P < .001. KC = keratoconus, LVC = laser vision correction, Max = maximum, Min = minimum, ns = not significant; STD = standard.

tered corneal periphery in both LVC and KC groups, but a larger study would be needed to verify this comparison. These group differences are shown in Figure 3, which demonstrates the range of values for each group. There were significant separation of mean, min, max-min, and SSD Brillouin shift values between the Control and KC groups, significant separation of mean, max, and min Brillouin shift values between the LVC and KC groups, and significant separation of min, max-min, and SSD Brillouin shift values between the Control and LVC groups.

• **ROC CURVES:** ROC curves were generated to evaluate the ability of motion-tracking Brillouin imaging to distinguish between Control and KC eyes (Figure 4, A), Control

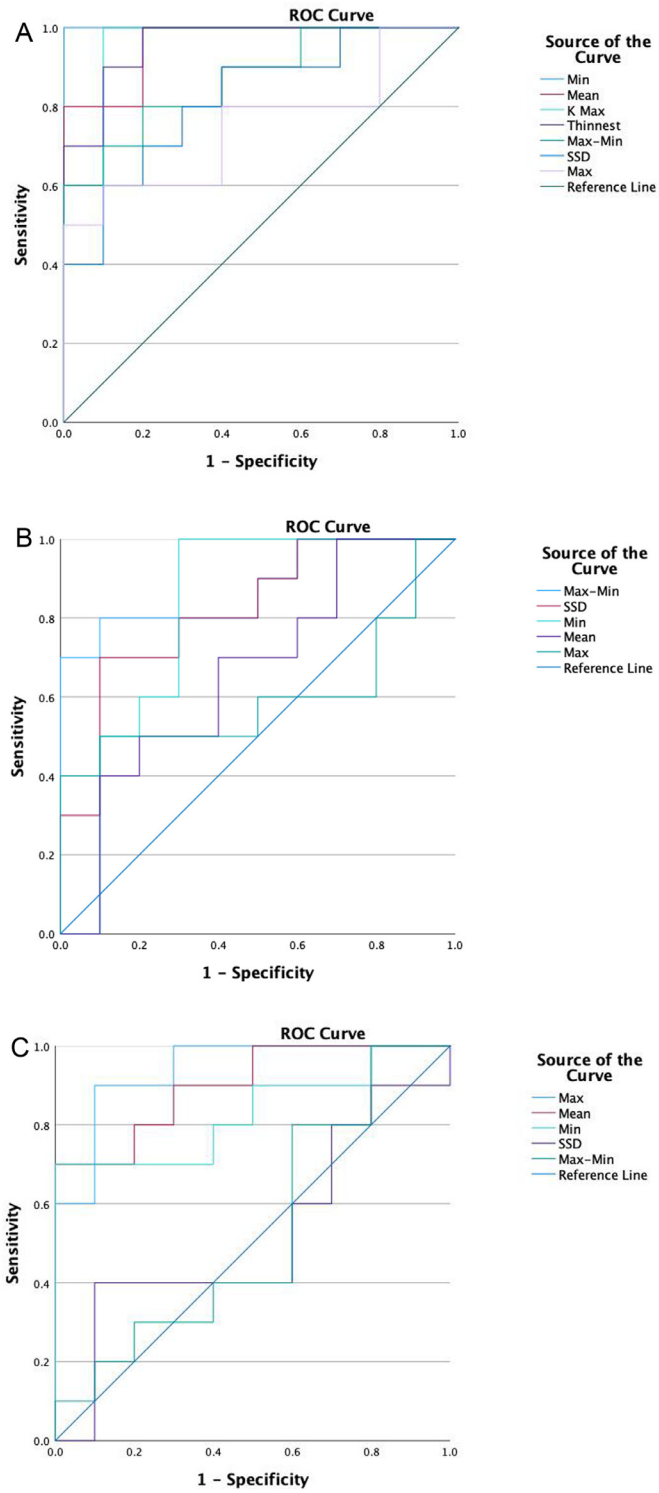

FIGURE 4. Receiver operating characteristic (ROC) curves for (A) Controls vs KC, (B) Controls vs LVC, and (C) LVC vs KC. For Controls vs KC, min Brillouin shift performed best and fully separated the groups, whereas mean Brillouin shift performed as well as K max or minimum pachymetry metrics. For Controls vs LVC, max-min, spatial standard deviation, and min Brillouin shift values performed best at distinguishing between the groups. For LVC vs KC, max Brillouin shift performed best, followed by mean Brillouin shift. KC = keratoconus, LVC = laser vision correction, Max = maximum, Min = minimum, SSD = spatial standard deviation.

TABLE 5. Area Under the Curve: Controls vs Keratoconus

Variable	AUROC
Minimum Brillouin shift	1.000
Mean Brillouin shift	0.960
K Max	0.960
Thinnest point	0.960
Max-Min	0.870
Spatial standard deviation	0.820

AUROC = area under the receiver operating characteristic, K Max = maximum keratometry value.

TABLE 6. Area Under the Curve: Controls vs LVC

Variable	AUROC
Max-Min	0.880
Spatial standard deviation	0.820
Minimum Brillouin shift	0.810
Mean Brillouin shift	0.660
Maximum Brillouin shift	0.600

AUROC = area under the receiver operating characteristic.

TABLE 7. Area Under the Curve: LVC vs Keratoconus

Variable	AUROC
Maximum Brillouin shift	0.940
Mean Brillouin shift	0.900
Min Brillouin shift	0.830
Max-Min	0.530
Spatial standard deviation	0.520

AUROC = area under the receiver operating characteristic.

TABLE 8. Correlation Between Minimum Brillouin Shift Value and Brillouin Shift at Various Locations Derived by Scheimpflug Imaging

Location	Correlation[a]	*P* Value
Thinnest point	0.871	.001
K Max (tangential)	0.840	.002
Max anterior elevation	0.812	.004
Max posterior elevation	0.788	.007
K Max (axial)	0.587	.075

K Max = maximum keratometry value, Max = maximum.
[a]Pearson's correlation coefficient.

and LVC eyes (Figure 4, B), and LVC and KC eyes (Figure 4, C). The area under the ROC (AUROC) values for all comparisons are shown in Tables 5-7.

For Controls vs KC (Table 5), min Brillouin shift values completely separated the Control and KC populations, whereas mean Brillouin shift values performed as well as K max and minimum pachymetry in distinguishing groups. Max-min and SSD also performed well at distinguishing between the groups. The AUROC values for Controls vs LVC comparisons are shown in Table 6. Clinical variables were not evaluated because of the obvious differences between the groups. In this comparison, max-min values and SSD performed best at separating groups, whereas there was, as expected, significant overlap between mean and max Brillouin shifts. The AUROC values for LVC vs KC comparisons are shown in Table 7. Clinical variables were not evaluated because of the obvious differences between the groups. In this comparison, max Brillouin shift performed best at separating groups, followed by mean Brillouin shift and min Brillouin shift.

• **MIN BRILLOUIN SHIFT AND CLINICAL PARAMETER LOCATION CORRELATIONS:** As no localized focal minimum values were identifiable in the Control group, no attempt was made to correlate local Brillouin shift values with clinical parameters. Among the LVC group, while there were notable Brillouin shift differences across the cornea, there were no significant correlations between min Brillouin shift and any regionally identifiable location on Scheimpflug imaging, nor were there any significant correlations between any locations generated using difference maps in the 7 eyes with both preoperative and postoperative Scheimpflug imaging available.

Within the KC group, correlations between min Brillouin shift and localized Brillouin shift values identified in Scheimpflug imaging can be found in Table 8. Min Brillouin shift best correlated with localized values at the area of thinnest pachymetry on the pachymetry map and K max on the tangential curvature map, followed by the location of maximum anterior (front) elevation, followed by maximum posterior (back) elevation. Min Brillouin shift values were not well correlated with K max location on axial curvature maps, although to confirm a lack of correlation with this value, a larger study would be needed.

DISCUSSION

In this study, motion-tracking Brillouin microscopy identified discrete focal corneal biomechanical differences between normal eyes, eyes with stage I and II KC, and eyes that had remotely undergone successful, stable LVC. Although normal control eyes displayed minimal variation in Brillouin shift measures across the central cornea, there was marked focal weakening identified in both stable LVC and stage I/II KC eyes. These results show a clear improvement in device sensitivity and discriminative performance for motion-tracking Brillouin microscopy compared with prior Brillouin microscopy reports.[26-28]

In contrast to prior Brillouin microscopy studies,[26,27] multiple motion-tracking Brillouin metrics performed well at differentiating stage I and II KC from normal controls. Minimum Brillouin shift, corresponding to the softest value in the cornea, fully differentiated the KC and Control groups, whereas mean Brillouin shift performed well in differentiating between these groups. These metrics performed well in differentiating these groups when compared with the basic Scheimpflug metrics K max and thinnest pachymetry, in contrast to previous Brillouin microscopy studies in which basic Scheimpflug parameters outperformed all Brillouin metrics for early KC.[26,27] This study was not powered, however, to directly address the comparative success of Brillouin and Scheimpflug metrics. Future studies will be designed to quantitatively compare Brillouin metrics performances vs existing instruments.

There was a clear focal reduction in Brillouin modulus in the LVC group. This is not surprising given the clinical impression that LVC reduces corneal stiffness in conjunction with both flap creation in LASIK and tissue ablation for both LASIK and PRK. Our results demonstrate that even in stable cases, some corneal weakening has occurred. These findings are in general agreement with data from studies evaluating the cornea after LVC using both modeling and experimental studies.[29-36] However, prior Brillouin analysis was unable to identify these changes once initial postoperative corneal edema resolved.[28] Our patients were all evaluated many years after successful and stable LVC; thus, we feel this cohort is representative of the postoperative state after successful LVC. In this population, variation across the cornea, measured by SSDs and max-min values, best characterized the differences between normal and LVC corneas, whereas absolute values such as max, mean, and min values best differentiated LVC from KC corneas.

In the KC group, min Brillouin shift values correlated best with the thinnest point and maximum anterior curvature based on tangential curvature and were not well correlated with maximum steepening on axial curvature. This is not surprising because axial curvature represents curvature relative to the optical center and so averages values in any given steep meridian, whereas tangential curvature represents focal steepening at a specified location in the cornea. In this study, thinnest pachymetry and tangential curvature outperformed both anterior and posterior elevation locations; however, in most corneas, Brillouin shift values varied by only 20 to 30 MHz between the different Scheimpflug regions evaluated. A larger cohort with greater variation in KC stages will be necessary to draw more robust conclusions regarding morphologic locations and Brillouin shift values. In contrast, there were no correlations found between focal Brillouin shift values for LVC cases and any morphologic locations. This seems logical given the presumption that stable LVC cases represent corneas that have been altered in terms of their baseline biomechanical profile at the time of surgery but otherwise remain stable and therefore have no morphologic protrusions or further focal thinning postoperatively. Nevertheless, these findings are remarkable in their ability to nicely characterize the biomechanical impact of stable LVC directly rather than relying on presumptions. It is anticipated that there would be a correlation between postoperative morphologic alterations and min Brillouin shift in patients who develop postoperative ectasia; future work may better elucidate the role of motion-tracking Brillouin microscopy in these cases.

Although some Brillouin values effectively distinguished between LVC and KC corneas, min Brillouin shift and deviations across the cornea were less effective in this pairing than when differentiating between Control and KC eyes. There was thus still more overlap in biomechanical metrics than would be anticipated clinically. In the LVC group, 2 of the patients had PRK; interestingly, these 2 eyes had the lowest mean Brillouin shift values of the group. Without preoperative imaging or Brillouin maps, it is impossible to draw robust conclusions in this overlap between stable LVC eyes and KC eyes at this point.

As the initial report from this ongoing research project, this paper has limitations. The device reported herein is a custom-built Brillouin microscope that is not Food and Drug Administration approved nor commercially available for use. In this first clinical paper using motion-tracking Brillouin microscopy, we chose to focus data analysis on easily obtainable Brillouin metrics that evaluated each corneal location as a single entity rather than relying on complex depth-dependent evaluations. We were pleased to find that even these straightforward metrics showed great discriminative capabilities. We anticipate that future analyses will incorporate more sophisticated quantification of depth-dependent differences between the groups because we know that depth-dependent corneal stiffness differences are present in both normal[13,15,18,19,38] and keratoconic corneas.[46]

The mechanical properties of the cornea depend on tissue hydration, and thus hydration changes affect Brillouin microscopy readings,[25] as, it should be noted, they affect any other mechanical testing.[47] However, tissue hydration can vary significantly over time in patients undergoing LVC, and thus care must be taken in these characterizations. In our study, we investigated patients who had undergone LVC much before the measurement, so this effect should be minimal.

For the LVC group, with only postoperative Brillouin maps available, we were unable to determine the specific change for regional Brillouin metrics for any post-LVC corneas that would have resulted from surgery in this cohort. We were merely able to characterize general differences in Brillouin shift between patients who did and did not have LVC. The next step in this process will be the evaluation of Brillouin maps before and after various LVC procedures; this is the focus of an ongoing prospective study currently underway. Further, as with the KC population, we anticipate that there will be a need for enhanced depth-

dependent analysis in future studies where LVC eyes are evaluated.

Although both min and mean Brillouin shift performed very well at distinguishing between patients with early KC and normal controls, these eyes are already relatively easy to identify using a variety of clinical imaging devices. We have not yet evaluated the effectiveness of motion-tracking Brillouin imaging to distinguish between KC suspect corneas and Controls. This is the focus of a future study. Nevertheless, this is the first time that laterally distributed focal differences have been shown in the keratoconic cornea that were pronounced enough that they were effective in group discrimination.

The number of subjects evaluated in this study is small. However, the study was adequately powered, and pronounced differences between groups were evident in this cohort; thus, this should not be viewed as a study limitation. The fact that these differences were so pronounced and readily identifiable enhances rather than detracts from our results, as the primary disadvantage of studies with small sample sizes is the risk of missing possibly significant findings, rather than identifying significant findings where they actually are not present.[48] Larger studies will be undertaken to evaluate less obvious KC cases and to elucidate more specific details regarding the change in corneal biomechanics induced by LVC procedures. Future improvement in the easy operation of the instrument and the reduction of imaging session could be beneficial in this respect.

Finally, given the overlap in many Brillouin metrics between stable LVC and KC eyes, there is clearly more work to be done to further differentiate these eyes biomechanically, because their clinical courses are so distinctly different. Multiple current technologies have also struggled with this differentiation; the ability of Brillouin imaging to provide highly localized data may improve its ultimate ability to better distinguish these eyes.

Motion-tracking Brillouin microscopy, for the first time, effectively identified focal lateral corneal biomechanical alterations in patients with a history of successful and stable LVC and in patients with early KC and generated 2D metrics from the anterior cornea that were excellent in discriminating these eyes from normal controls in vivo. Multiple Brillouin shift parameters performed better than or equal to any clinical Scheimpflug metrics in distinguishing between early KC and Controls. Minimum Brillouin shift location, corresponding to the weakest point in the cornea, correlated well with thinnest pachymetry and maximum anterior tangential curvature locations. Next steps to further this work include detailed Brillouin analysis of corneas before and after specific LVC procedures including LASIK, PRK, and small-incision lenticule extraction, CXL, and in-depth evaluation of the ability of motion-tracking Brillouin microscopy to identify KC suspect corneas.

Funding/Support: The work was supported in part by the National Institutes of Health (R01 EY028666, R01 EY032537); and an unrestricted departmental grant was awarded to the Cole Eye Institute, Cleveland Clinic, from Research to Prevent Blindness (New York, NY, USA). Financial Disclosures: W.J.D. is on medical advisory boards for Alcon and has intellectual property unrelated to this work through Cleveland Clinic Innovations. G.S. has patents (UMD and MGH) related to Brillouin technology, and equity and consultant Intelon Optics. All authors attest that they meet the current ICMJE criteria for authorship.

REFERENCES

1. Luce DA. Determining in vivo biomechanical properties of the cornea with an ocular response analyzer. *J Cataract Refract Surg*. 2005;31(1):156–162.
2. Hallahan KM, Sinha Roy A, Ambrosio Jr R, Salomao M, Dupps Jr WJ. Discriminant value of custom ocular response analyzer waveform derivatives in keratoconus. *Ophthalmology*. 2014;121(2):459–468.
3. Luz A, Lopes B, Hallahan KM, et al. Discriminant value of custom ocular response analyzer waveform derivatives in forme fruste keratoconus. *Am J Ophthalmol*. 2016;164:14–21.
4. De Stefano VS, Seven I, Randleman JB, Dupps Jr WJ. Custom air puff-derived biomechanical variables in a refractive surgery screening setting: study from 2 centers. *J Cataract Refract Surg*. 2018;44(5):589–595.
5. Labiris G, Giarmoukakis A, Gatzioufas Z, et al. Diagnostic capacity of the keratoconus match index and keratoconus match probability in subclinical keratoconus. *J Cataract Refract Surg*. 2014;40(6):999–1005.
6. Fontes BM, Ambrosio Jr R, Jardim D, Velarde GC, Nosé W. Corneal biomechanical metrics and anterior segment parameters in mild keratoconus. *Ophthalmology*. 2010;117(4):673–679.
7. Tian L, Ko MW, Wang LK, et al. Assessment of ocular biomechanics using dynamic ultra high-speed Scheimpflug imaging in keratoconic and normal eyes. *J Refract Surg*. 2014;30(11):785–791.
8. Vinciguerra R, Ambrosio Jr R, Elsheikh A, et al. Detection of keratoconus with a new biomechanical index. *J Refract Surg*. 2016;32(12):803–810.
9. Vinciguerra R, Ambrosio Jr R, Roberts CJ, Azzolini C, Vinciguerra P. Biomechanical characterization of subclinical keratoconus without topographic or tomographic abnormalities. *J Refract Surg*. 2017;33(6):399–407.
10. Steinberg J, Siebert M, Katz T, et al. Tomographic and biomechanical Scheimpflug imaging for keratoconus characterization: a validation of current indices. *J Refract Surg*. 2018;34(12):840–847.
11. Ferreira-Mendes J, Lopes BT, Faria-Correia F, et al. Enhanced ectasia detection using corneal tomography and biomechanics. *Am J Ophthalmol*. 2019;197:7–16.

12. Kling S, Marcos S. Contributing factors to corneal deformation in air puff measurements. *Invest Ophthalmol Vis Sci*. 2013;54(7):5078–5085.
13. Scarcelli G, Pineda R, Yun SH. Brillouin optical microscopy for corneal biomechanics. *Invest Ophthalmol Vis Sci*. 2012;53(1):185–190.
14. Scarcelli G, Yun SH. Confocal Brillouin microscopy for three-dimensional mechanical imaging. *Nat Photonics*. 2007;2:39–43.
15. Scarcelli G, Yun SH. In vivo Brillouin optical microscopy of the human eye. *Opt Express*. 2012;20(8):9197–9202.
16. Scarcelli GY. *Biomechanics of the Eye*. S.H. Brillouin microscopy. Amsterdam: the Netherlands: Kugler Publications; 2018.
17. Zhang J, Scarcelli G. Mapping mechanical properties of biological materials via an add-on Brillouin module to confocal microscopes. *Nat Protoc*. 2021;16(2):1251–1275.
18. Scarcelli G, Besner S, Pineda R, Yun SH. Biomechanical characterization of keratoconus corneas *ex vivo* with Brillouin microscopy. *Invest Ophthalmol Vis Sci*. 2014;55(7):4490–4495.
19. Scarcelli G, Besner S, Pineda R, Kalout P, Yun SH. In vivo biomechanical mapping of normal and keratoconus corneas. *JAMA Ophthalmol*. 2015;133(4):480–482.
20. Scarcelli G, Kling S, Quijano E, et al. Brillouin microscopy of collagen crosslinking: noncontact depth-dependent analysis of corneal elastic modulus. *Invest Ophthalmol Vis Sci*. 2013;54(2):1418–1425.
21. Randleman JB, Su JP, Scarcelli G. Biomechanical changes after LASIK flap creation combined with rapid cross-linking measured with Brillouin microscopy. *J Refract Surg*. 2017;33(6):408–414.
22. Webb JN, Su JP, Scarcelli G. Mechanical outcome of accelerated corneal crosslinking evaluated by Brillouin microscopy. *J Cataract Refract Surg*. 2017;43(11):1458–1463.
23. Zhang H, Roozbahani M, Piccinini AL, et al. Depth-dependent reduction of biomechanical efficacy of contact lens-assisted corneal cross-linking analyzed by Brillouin microscopy. *J Refract Surg*. 2019;35(11):721–728.
24. Zhang H, Roozbahani M, Piccinini AL, et al. Brillouin microscopic depth-dependent analysis of corneal crosslinking performed over or under the LASIK flap. *J Cataract Refract Surg*. 2020;46(11):1543–1547.
25. Shao P, Seiler TG, Eltony AM, et al. Effects of corneal hydration on Brillouin microscopy in vivo. *Invest Ophthalmol Vis Sci*. 2018;59(7):3020–3027.
26. Seiler TG, Shao P, Eltony A, et al. Brillouin spectroscopy of normal and keratoconus corneas. *Am J Ophthalmol*. 2019;202:118–125.
27. Shao P, Eltony AM, Seiler TG, et al. Spatially-resolved Brillouin spectroscopy reveals biomechanical abnormalities in mild to advanced keratoconus in vivo. *Sci Rep*. 2019;9(1):7467.
28. Eltony AM, Shao P, Seiler TG, et al. Longitudinal Brillouin measurements of the human cornea before and after LASIK. *Invest Ophthalmol Vis Sci*. 2018;59(9):1400.
29. Pepose JS, Feigenbaum SK, Qazi MA, Sanderson JP, Roberts CJ. Changes in corneal biomechanics and intraocular pressure following LASIK using static, dynamic, and noncontact tonometry. *Am J Ophthalmol*. 2007;143(1):39–47.
30. Vinciguerra R, Jr Ambrosio R, Elsheikh A, et al. Detection of postlaser vision correction ectasia with a new combined biomechanical index. *J Cataract Refract Surg*. 2021;47(10):1314–1318.
31. Yang K, Xu L, Fan Q, et al. Evaluation of new Corvis ST parameters in normal, post-LASIK, post-LASIK keratectasia and keratoconus eyes. *Sci Rep*. 2020;10(1):5676.
32. Santhiago MR, Wilson SE, Hallahan KM, et al. Changes in custom biomechanical variables after femtosecond laser in situ keratomileusis and photorefractive keratectomy for myopia. *J Cataract Refract Surg*. 2014;40(6):918–928.
33. Seven I, Vahdati A, Pedersen IB, et al. Contralateral eye comparison of SMILE and flap-based corneal refractive surgery: computational analysis of biomechanical impact. *J Refract Surg*. 2017;33(7):444–453.
34. Spiru B, Torres-Netto EA, Kling S, et al. Biomechanical properties of human cornea tested by two-dimensional extensiometry ex vivo in fellow eyes: PRK versus SMILE. *J Refract Surg*. 2019;35(8):501–505.
35. Francis M, Khamar P, Shetty R, et al. In vivo prediction of air-puff induced corneal deformation using LASIK, SMILE, and PRK finite element simulations. *Invest Ophthalmol Vis Sci*. 2018;59(13):5320–5328.
36. Raevdal P, Grauslund J, Vestergaard AH. Comparison of corneal biomechanical changes after refractive surgery by noncontact tonometry: small-incision lenticule extraction versus flap-based refractive surgery—a systematic review. *Acta Ophthalmol*. 2019;97(2):127–136.
37. Dawson DG, Randleman JB, Grossniklaus HE, et al. Corneal ectasia after excimer laser keratorefractive surgery: histopathology, ultrastructure, and pathophysiology. *Ophthalmology*. 2008;115(12):2181–2191 e1.
38. Randleman JB, Dawson DG, Grossniklaus HE, McCarey BE, Edelhauser HF. Depth-dependent cohesive tensile strength in human donor corneas: implications for refractive surgery. *J Refract Surg*. 2008;24(1):S85–S89.
39. Zhang H, Asroui L, Randleman JB, Scarcelli G. Motion-tracking Brillouin microscopy for in-vivo corneal biomechanics mapping. *Biomed Opt Express*. 2022;13(12):6196–9210.
40. Amsler M. Classic keratocene and crude keratocene; unitary arguments. *Ophthalmologica*. 1946;111(2-3):96–101.
41. Krumeich JH, Daniel J, Knulle A. Live-epikeratophakia for keratoconus. *J Cataract Refract Surg*. 1998;24(4):456–463.
42. Vaughan JM, Randall JT. Brillouin scattering, density and elastic properties of the lens and cornea of the eye. *Nature*. 1980;284(5755):489–491.
43. Leonard DW, Meek KM. Refractive indices of the collagen fibrils and extrafibrillar material of the corneal stroma. *Biophys J*. 1997;72(3):1382–1387.
44. Zhang HA, Asroui L, Randleman JB, Scarcelli G. Motion–tracking Brillouin microscopy for in-vivo corneal biomechanics mapping. *Biomed Opt Express*. 2022;13(12):6196–6210.
45. Sinha Roy A, Dupps Jr WJ. Patient-specific modeling of corneal refractive surgery outcomes and inverse estimation of elastic property changes. *J Biomech Eng*. 2011;133(1) 011002.
46. De Stefano VS, Ford MR, Seven I, Dupps Jr WJ. Depth-dependent corneal biomechanical properties in normal and keratoconic subjects by optical coherence elastography. *Transl Vis Sci Technol*. 2020;9(7):4.

47. Seiler TG, Shao P, Frueh BE, Yun SH, Seiler T. The influence of hydration on different mechanical moduli of the cornea. *Graefes Arch Clin Exp Ophthalmol*. 2018;256(9):1653–1660.

48. Ledolter J, Kardon RH. Focus on data: statistical design of experiments and sample size selection using power analysis. *Invest Ophthalmol Vis Sci*. 2020;61(8):11.