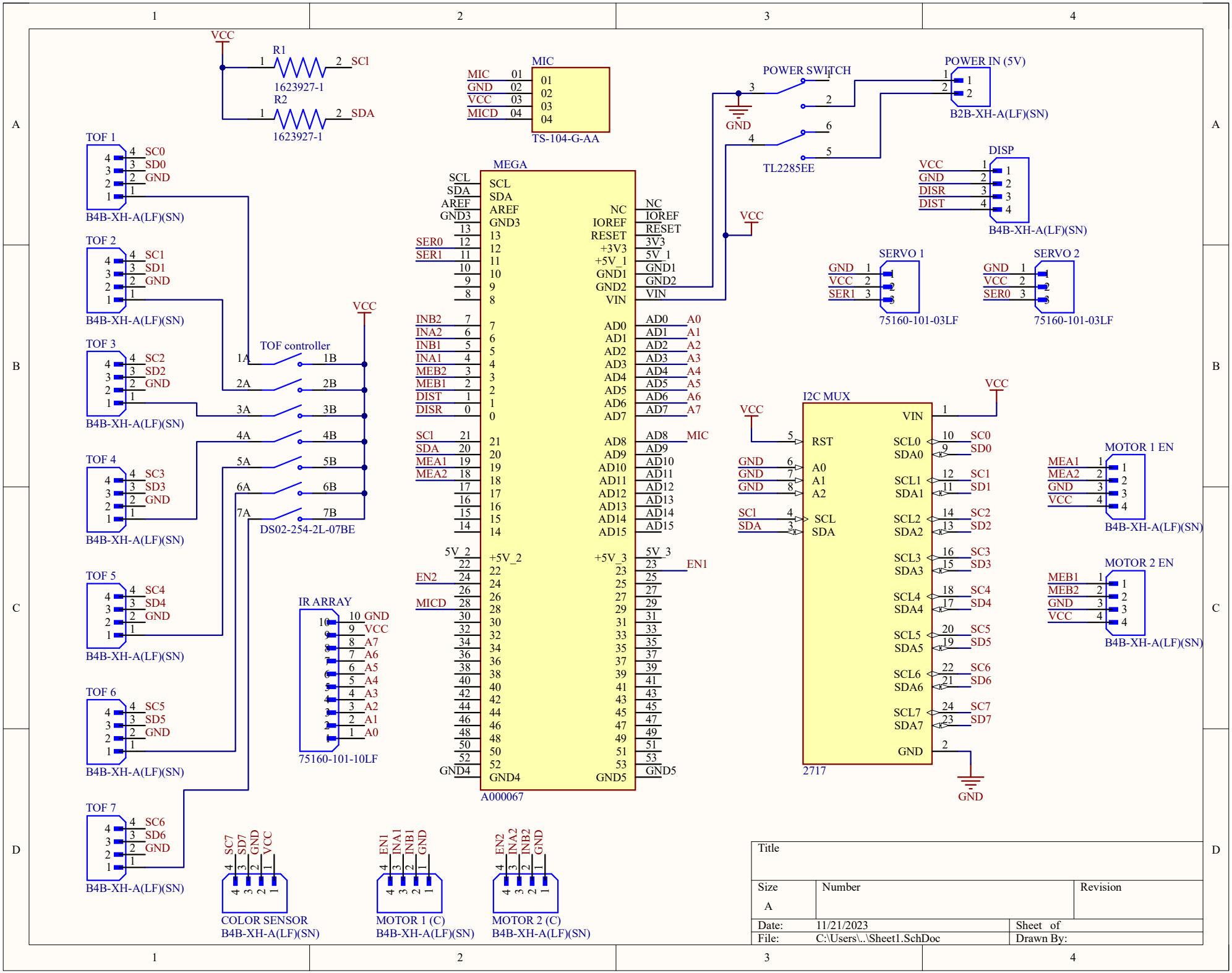
VCC
R1
1623927-1
SCl
R2
1623927-1
SDA
MIC
MIC 01
GND 02
VCC 03
MICD 04
TS-104-G-AA
POWER SWITCH
TL2285EE
GND
POWER IN (5V)
B2B-XH-A(LF)(SN)
DISP
VCC
GND
DISR
DIST
B4B-XH-A(LF)(SN)
MEGA
A000067
SERVO 1
SERVO 2
75160-101-03LF
TOF 1
TOF 2
TOF 3
TOF 4
TOF 5
TOF 6
TOF 7
B4B-XH-A(LF)(SN)
TOF controller
DS02-254-2L-07BE
IR ARRAY
75160-101-10LF
I2C MUX
2717
MOTOR 1 EN
MOTOR 2 EN
COLOR SENSOR
B4B-XH-A(LF)(SN)
MOTOR 1 (C)
B4B-XH-A(LF)(SN)
MOTOR 2 (C)
B4B-XH-A(LF)(SN)
Title
Size
A
Number
Revision
Date: 11/21/2023
Sheet of
File: C:\Users\..\Sheet1.SchDoc
Drawn By: