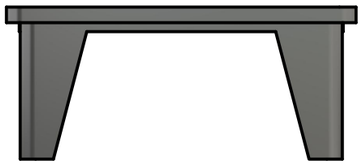

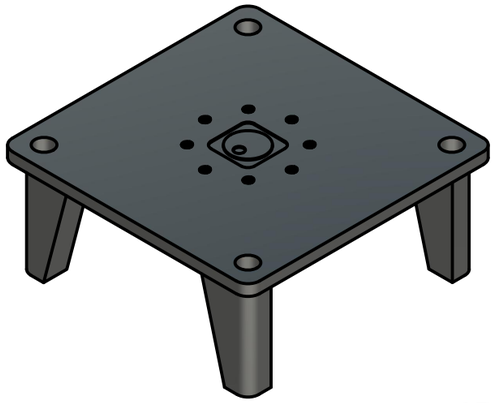

3D Isometric View (1:1)

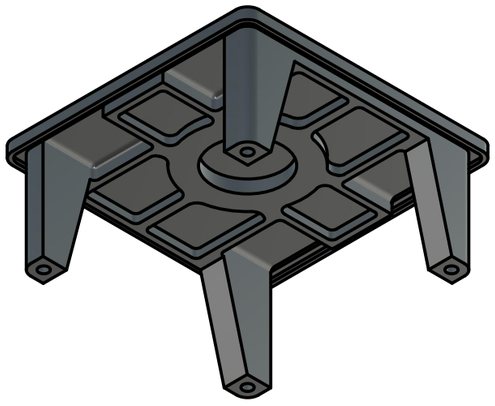

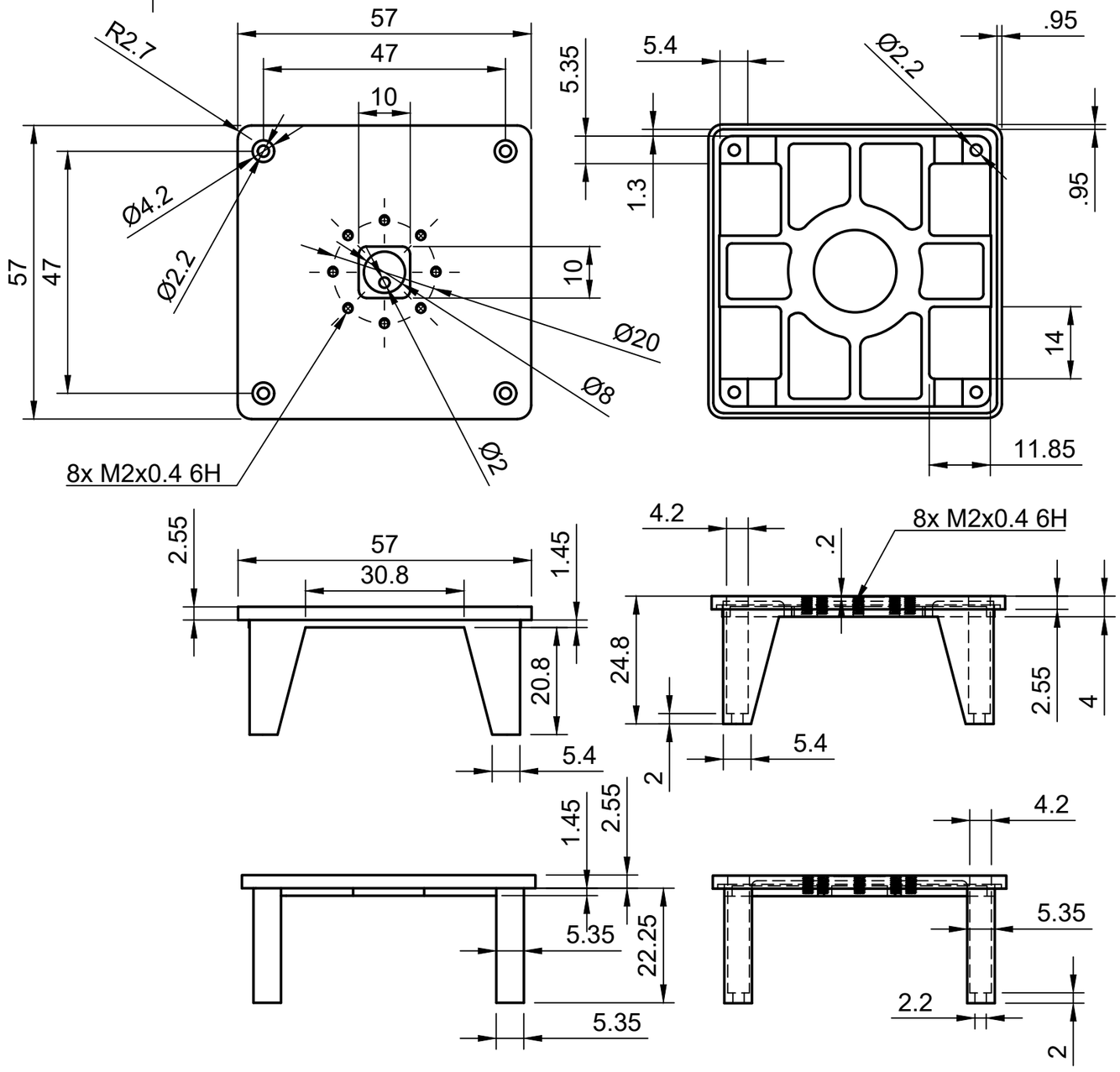

Unit: mm

NOTES, UNLESS SPECIFIED OTHERWISE
1. ALL UNITS ARE IN mm
2. BREAK ALL SHARP EDGES
3. DRAWING AND TOLERANCE STANDARD ISO 2768-1

Dept. Olive X	Technical reference	Created by Mojtaba Leox Karimi 9/29/2022	Approved by Leox.K 29.09.2022
Olive Robotics		Document type CNC ALU	Document status
		Title Servo-Back	DWG No. SRV-BK28092201
		www.olive-robotics.com	Rev. 1 / Date of issue 26.09.2022 / Sheet 1/1