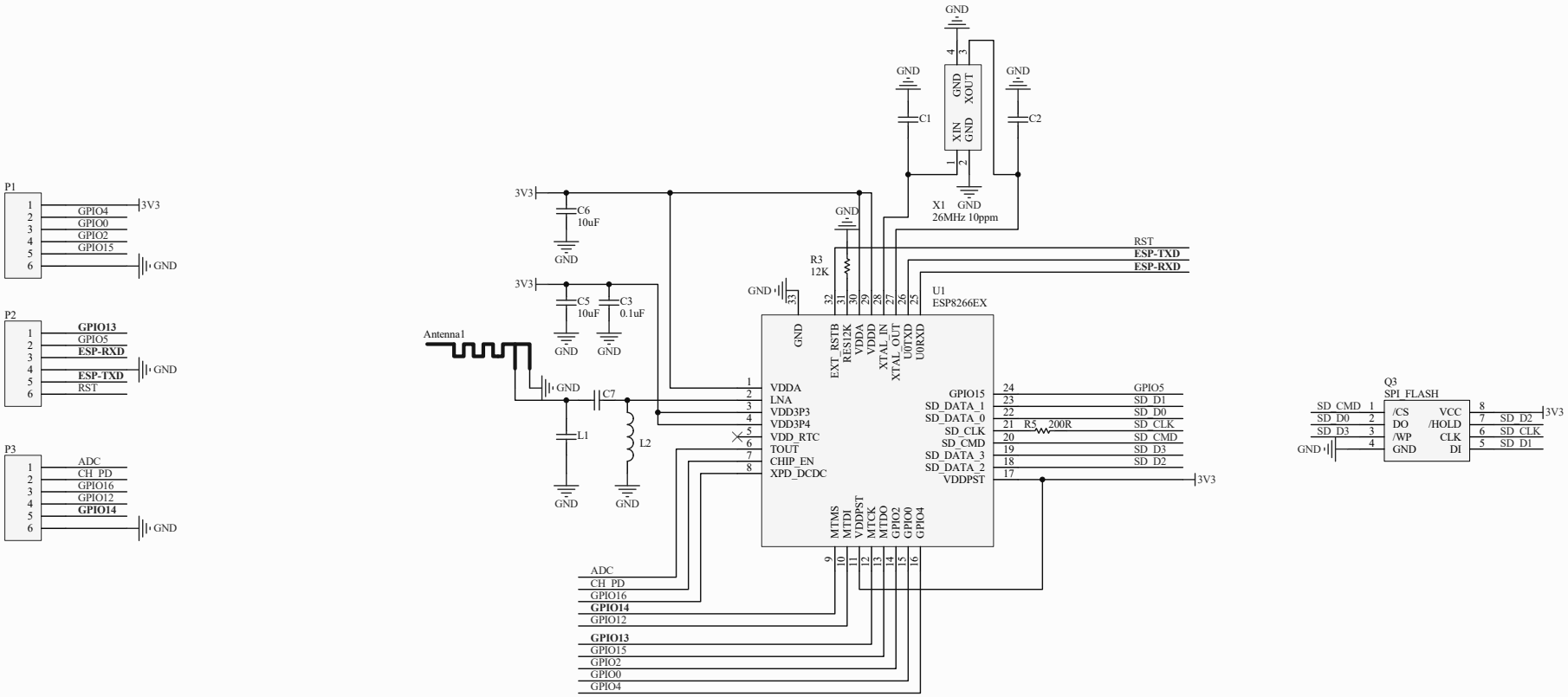

Title		
ESP8266-12F wifi模块		
Size A3	Number 深圳市汇思锐科技有限公司 https://shop124397968.taobao.com	Revision V1.2
Date: 2016/9/9		Sheet of
File: E:\项目_2016\..\ESP8266-12F.SchDoc		Drawn By: