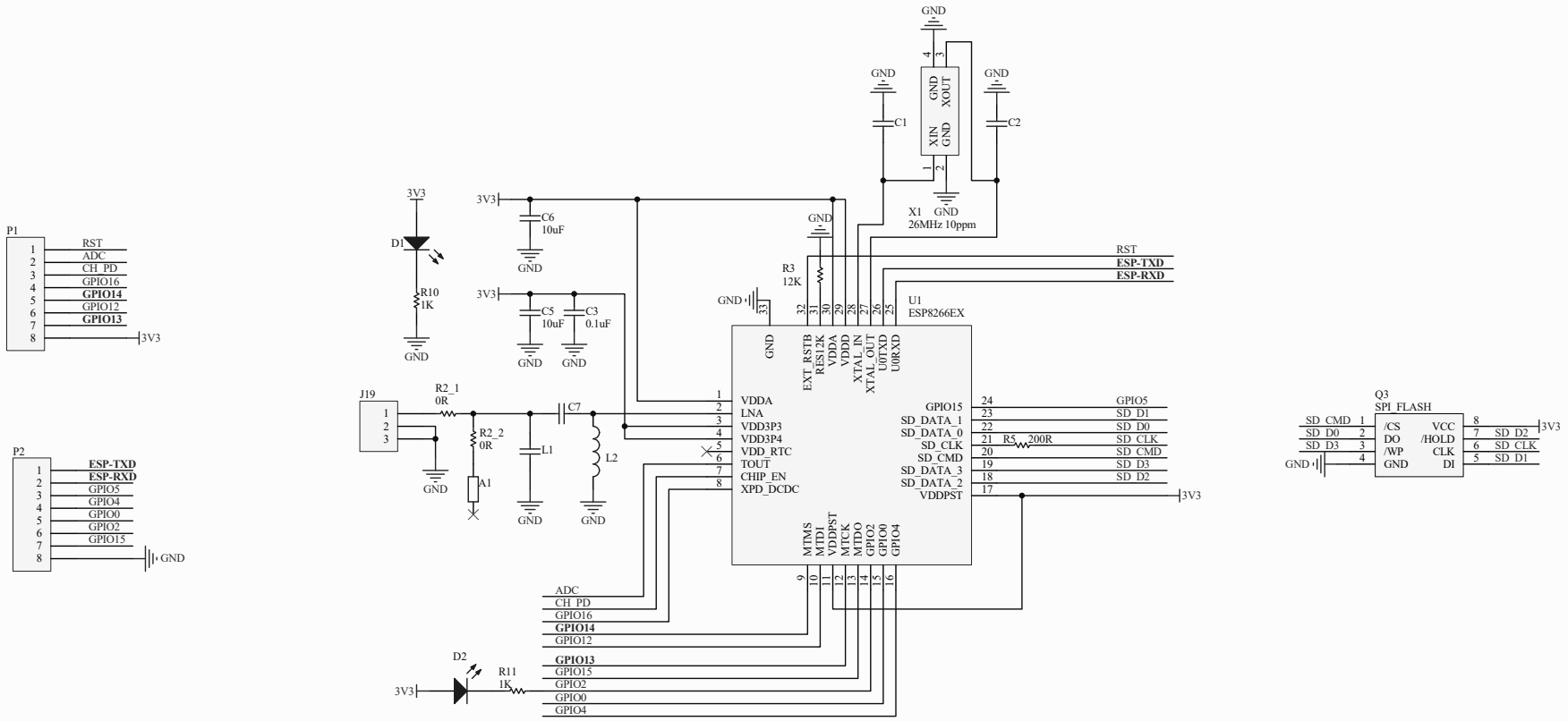


| | | |
|---|---|---|
| Title | ESP8266-07 wifi模块 | |
| Size A3 | Number 深圳市汇思锐科技有限公司 https://shop124397968.taobao.com | Revision V1.2 |
| Date: 2016/10/10 | | Sheet of |
| File: E:\项目_2016\..\ESP8266-07.SchDoc | | Drawn By: |