Hardware Block:

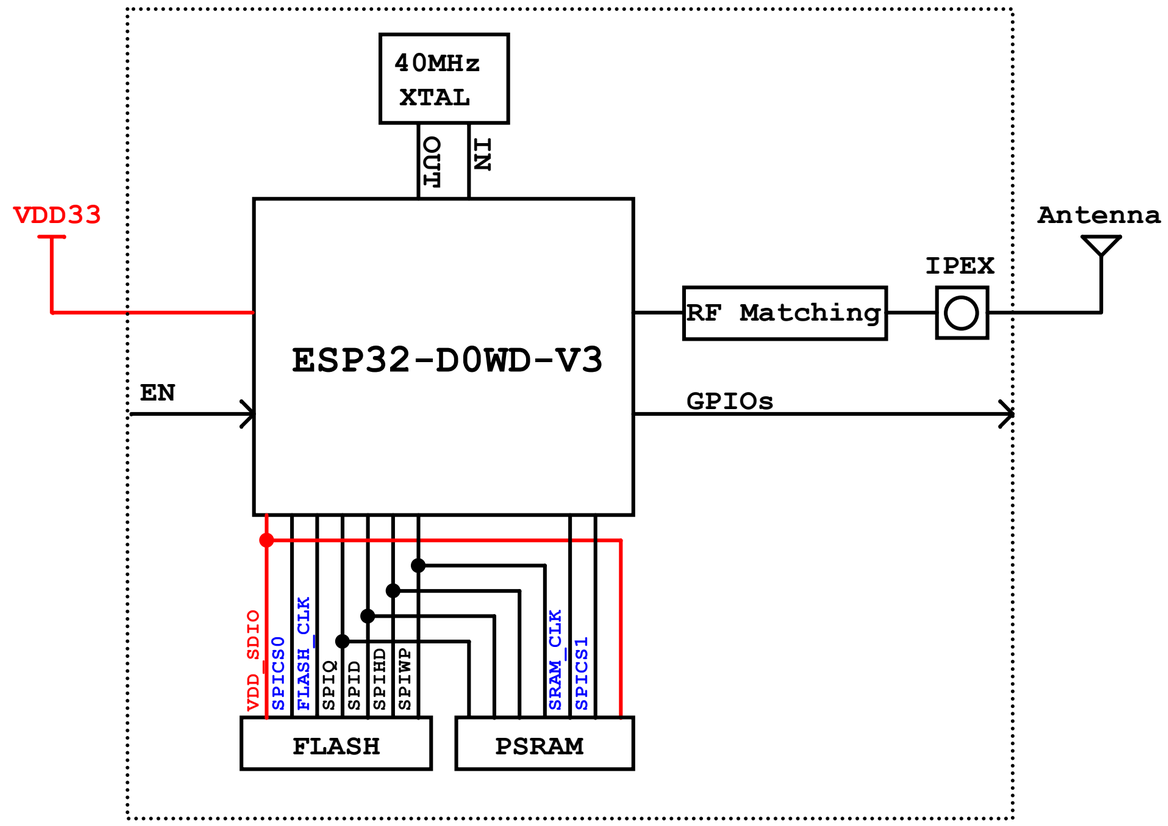

ESPRESSIF			
乐鑫信息科技（上海）股份有限公司			
Title <ESP32-WROVER-IE>			
Size C	Page Name <01_Function Block>	Rev V1.2	Confidential and Proprietary
Date: Thursday, August 06, 2020		Sheet 1 of 2	

The values of C1 and C2 vary with the selection of the crystal.

The value of R2 varies with the actual PCB board.

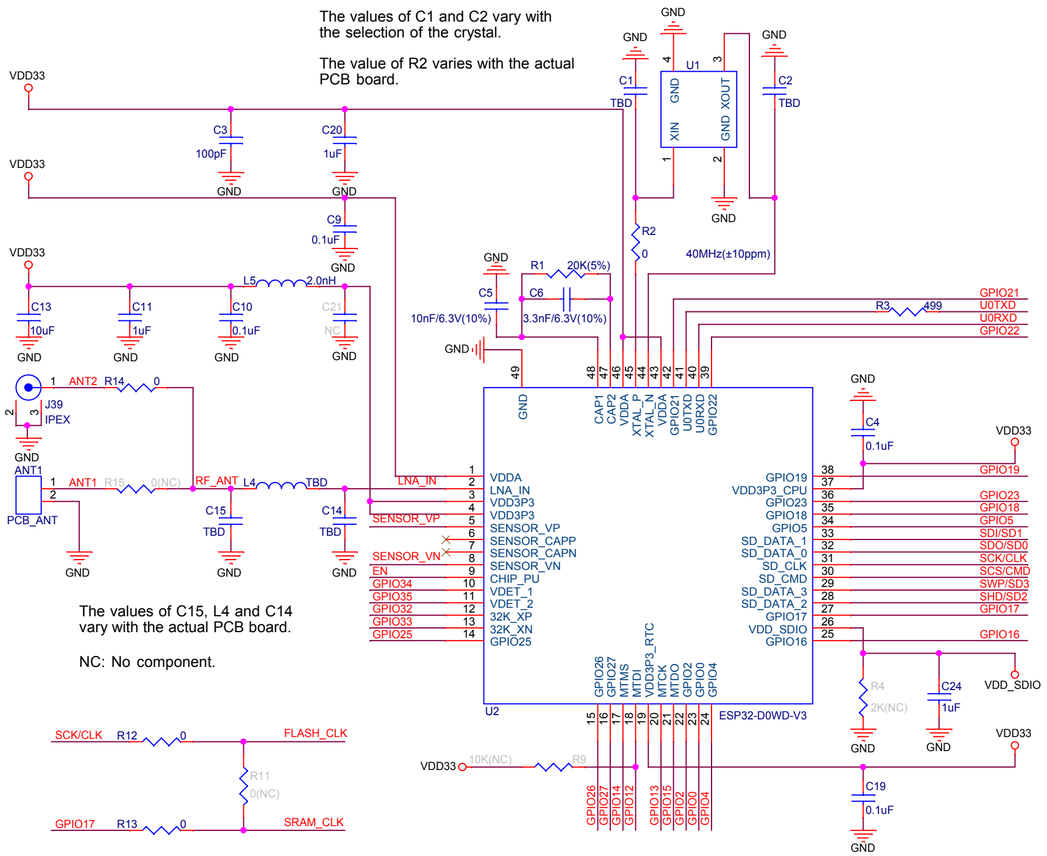

The values of C15, L4 and C14 vary with the actual PCB board.

NC: No component.

Flash and PSRAM

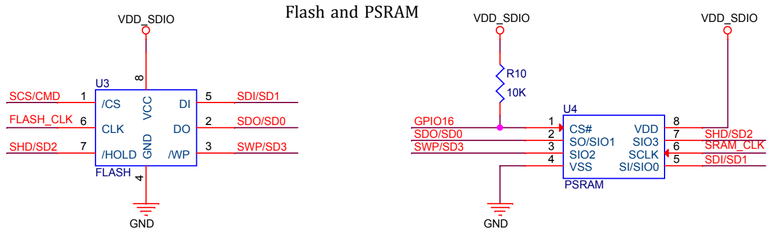

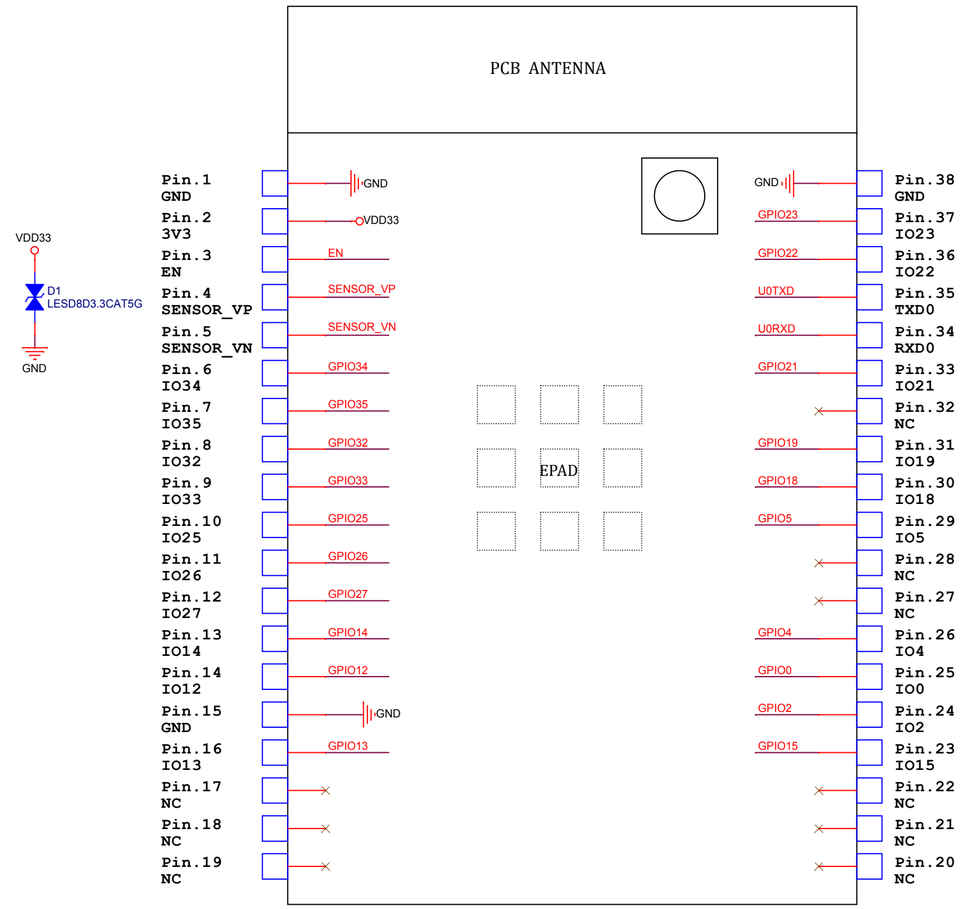

ESPRESSIF

乐鑫信息科技（上海）股份有限公司

Title	<ESP32-WROVER-IE>		
Size C	Page Name <ESP32-WROVER-IE>	Rev V1.2	Confidential and Proprietary
Date: Thursday, August 06, 2020		Sheet 2 of 2	