EFES Project Proposal

FPGA-Assisted ECG Monitor with real-time QRS detection

Asma Rastgou
Politecnico di Torino

March 1, 2026

This report describes the design direction of an FPGA-assisted ECG monitor that combines analog sensing, microcontroller-based acquisition, and real-time digital processing on an FPGA. The project is intended as a course project for "Electronics for Embedded Systems," but it is also meant to evolve into a practical design document that records what has already been implemented, what has been verified on hardware, and what still remains to be refined.

Contents

1 Initial Proposal **4**
1.1 System Description 4
1.2 Expected Results 5

2 Component Description **6**
2.1 Analog Devices 6
2.1.1 Power Supply Regulation and Bypassing 7
2.2 Digital Components 7
2.2.1 FPGA 7
2.2.2 ADC 8
2.2.3 Microcontroller (XMC_2GO) 9
2.2.4 Clock Configuration 9
2.3 Interconnections 9
2.3.1 FPGA Pin Planning 9
2.3.2 Communication Strategy 10
2.4 Current Status 10

1 Initial Proposal

1.1 System Description

The proposed ECG monitoring system acquires and processes the cardiac signal in a complete embedded flow, combining analog sensing, mixed-signal conversion, microcontroller management, and FPGA-based processing. The signal is first captured by the **AD8232** analog front-end, which amplifies and filters the weak bio-potential obtained from the body through three surface electrodes (RA, LA, RL). The conditioned analog waveform, centered around 1.5 V and spanning a few hundred millivolts peak-to-peak, is then sampled by a **16-bit ADS1115** analog-to-digital converter.

The digitized ECG samples are read by the **XMC_1100** microcontroller over the I^2C bus. The MCU then forwards framed 16-bit samples to the **Tang Nano 9K FPGA** over SPI, where the FPGA acts as a compact streaming co-processor rather than a passive interface. In the current hardware implementation, the FPGA first receives the serial data through a clock-domain-safe SPI slave, then processes each valid sample with a sample-gated 31-tap FIR stage tuned to emphasize the QRS band. That FIR is no longer implemented as one large combinational sum; instead, it is evaluated as a short sequential multiply-accumulate process over several internal clock cycles, which makes the design much easier to close in timing while remaining far faster than the intended ECG sample rate. A lightweight threshold-based detector then estimates the occurrence of QRS complexes, and the BPM estimate is produced by a small sequential division step rather than by a single-cycle arithmetic block. This is intentionally a first working digital path: it already demonstrates real-time filtering, event detection, buffering, and actuation, while leaving room for a later extension toward a richer chain with separate high-pass, low-pass, and mains-rejection stages.

Once the samples have been filtered, the FPGA stores them temporarily in a 256-byte page buffer and writes complete pages to an external **Winbond W25Q64FV** flash memory over a second SPI interface, this time with the FPGA acting as SPI master. Abnormal BPM values drive an alarm output that can be connected either to a buzzer, to an LED, or to an MCU input for additional supervision. The board uses the on-board 27 MHz oscillator as its system clock, while the **S1** pushbutton is used as an active-low reset input, with reset release synchronized internally before the rest of the design starts operating.

Power is supplied either from USB during development or from a **3.7 V Li-ion battery** managed by a **TP4056 charger/protection circuit** and a **3.3 V linear regulator (AMS1117)** during standalone operation. The overall design forms a compact, battery-powered embedded system

that demonstrates sensing, data acquisition, digital processing, communication, storage, and actuation.

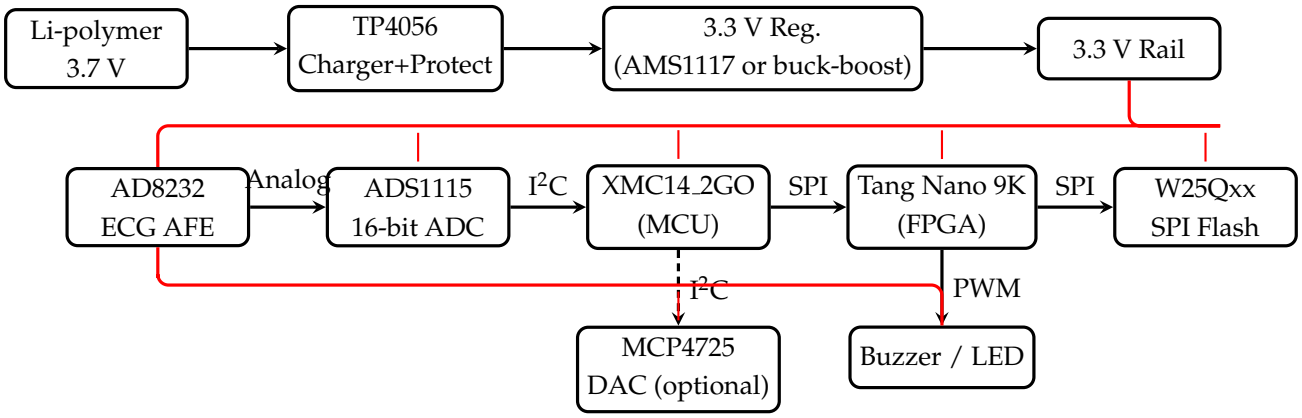

1.2 Expected Results

The final system is expected to acquire and process ECG signals in real time, detect QRS complexes in hardware, and expose the result in a form that can be observed both numerically and physically. A successful demonstration should show that the filtered signal can move through the digital chain without being lost, that the FPGA can flag heartbeat events as they occur, and that abnormal heart-rate estimates can be translated into a visible or audible alarm. Just as importantly, the project should result in a documented prototype that can be extended rather than a one-off proof of concept.

At the present stage, the most realistic short-term goals are a working breadboard prototype powered from the intended supply chain, a verified first-pass FPGA filtering and detection path, a register-level firmware prototype on the XMC14_2GO board, and repeatable logging of filtered samples to external SPI flash.

2 Component Description

2.1 Analog Devices

AD8232 Module

The AD8232 is used as the analog front-end because it is well suited to the small, noisy signals involved in ECG measurement. Its role in this project is to take the differential signal from the body electrodes and condition it into a cleaner, centered waveform that can be sampled by the ADC without needing a large amount of discrete analog circuitry. In practice, the most important characteristics are the output voltage range, the common-mode level of the signal, the amount of analog filtering already provided on the module, and the effective gain seen at the output.

Parameter	Symbol	Test Conditions/ Comments	A Grade Min	A Grade Typ	A Grade Max	W Grade Min	W Grade Typ	W Grade Max	Unit
OPERATIONAL AMPLIFIER (A1)									
Offset Voltage	V_{OS}			1	5				mV
		T_{OPR}					1	5	mV
Average TC		T_A = 0°C to 70°C		5					µV/°C
		T_{OPR}					5		µV/°C
Input Bias Current	I_B			100			100		pA
		T_A = 0°C to 70°C		1					nA
		T_{OPR}					2.5		nA
Input Offset Current	I_{OS}			100			100		pA
		T_A = 0°C to 70°C		1					nA
		T_{OPR}					1		nA
Input Voltage Range			0.1		$+V_S - 0.1$	0.1		$+V_S - 0.1$	V
Common-Mode Rejection Ratio	CMRR	V_{CM} = 0.5 V to 2.5 V		100			100		dB
Power Supply Rejection Ratio	PSRR			100			100		dB
Large Signal Voltage Gain	A_{VO}			110			110		dB
Output Voltage Range		R_L = 50 kΩ	0.1		$+V_S - 0.1$				V
		T_{OPR}				0.1		$+V_S - 0.1$	V
Short-Circuit Current Limit	I_{OUT}			12			12		mA
Gain Bandwidth Product	GBP			100			100		kHz
Slew Rate	SR			0.02			0.02		V/µs
Voltage Noise Density (RTI)	e_n	f = 1 kHz		60			60		nV/√Hz

Figure 2.1: AD8232 functional overview used as the analog front-end of the system.

Parameter	Symbol	Test Conditions/ Comments	A Grade Min	A Grade Typ	A Grade Max	W Grade Min	W Grade Typ	W Grade Max	Unit
LOGIC INTERFACE									
Input Characteristics									
Input Voltage (AC/$\overline{DC}$ and FR)									
Low	V_{IL}			1.24			1.24		V
High	V_{IH}			1.35			1.35		V
Input Voltage ($\overline{SDN}$)									
Low	V_{IL}			2.1			2.1		V
High	V_{IH}			0.5			0.5		V
Output Characteristics		LOD+ and LOD− terminals							
Output Voltage									
Low	V_{OL}			0.05			0.05		V
High	V_{OH}			2.95			2.95		V

Figure 2.2: Practical view of the AD8232 module and its connections.

2.1.1 Power Supply Regulation and Bypassing

The AD8232 is designed for low-power operation and can be supplied from a battery-based system, which makes it compatible with the intended portable use of the prototype. Even so, the analog front-end remains sensitive to supply noise, so the quality of the local power rail still matters. In a practical implementation this means keeping the 3.3 V rail stable, placing a small bypass capacitor close to the device supply pin, and avoiding unnecessary voltage excursions during charging or power-up. These details are easy to overlook during early breadboard work, but they directly affect the quality of the ECG waveform that reaches the ADC.

2.2 Digital Components

2.2.1 FPGA

The FPGA is the point in the system where raw samples become structured digital information. Its task is not simply to relay data onward, but to react continuously to the incoming stream and extract timing information from it. In the current implementation, the Tang Nano 9K receives one 16-bit sample at a time from the MCU, preserves the sample timing through a clock-domain crossing, filters the stream in fixed point, detects strong excursions associated with the QRS complex, estimates the corresponding BPM, and asserts an alarm output when the detected rate falls outside the chosen operating range. The important detail is that this is now done with timing-aware hardware blocks rather than with large single-cycle arithmetic expressions, so the current HDL is not only functionally consistent but also implementable on the target device.

The design is intentionally modular. A dedicated SPI slave receives data from the MCU. A DSP stage applies the FIR filter and the first heartbeat detector. A separate actuator block converts the BPM estimate into a simple digital alarm signal. Finally, a page buffer and flash logger cooperate to write filtered samples to the external Winbond flash in complete 256-byte bursts. This modular structure makes the HDL easier to reason about and, more importantly, makes it easier to refine one part of the system without destabilizing the rest.

Current HDL Organization

One of the most useful practical improvements in the current FPGA revision is that reset is treated as part of the architecture instead of as a loose external convenience signal. The design uses the on-board **S1** button as an active-low reset source, but its release is synchronized before the internal logic is allowed to run. In the 27 MHz core domain this produces a clean start-up for the DSP, logger, and control logic, while the SPI receiver also performs its own local reset synchronization inside the external SPI clock domain. That change avoids ambiguous start-up behavior and makes repeated testing on the board more predictable. The same attention to timing also appears in the data path: the incoming SPI words are transferred safely into the

system clock domain before the DSP pipeline consumes them, rather than being treated as if the external SPI clock were part of the same synchronous network.

FIR

A finite impulse response (FIR) filter is a natural first choice for this project because it is stable, deterministic, and straightforward to express in hardware. In discrete time, its output is a weighted sum of recent samples,

$$y[n] = \sum_{i=0}^{N} b_i \, x[n-i]$$

where each coefficient b_i weights a delayed copy of the input history. The current prototype uses a 31-tap fixed-point FIR whose coefficients were generated offline in Python and then converted to signed integers suitable for synthesis.

The implementation detail that mattered most in practice was not the equation itself, but when and how the filter state is allowed to advance. The FPGA runs from a 27 MHz clock, whereas the ECG sample rate is much lower. If the delay line were shifted on every FPGA clock edge, meaningful ECG samples would immediately be diluted by idle cycles and the filter would stop representing the real signal history. The present design therefore treats the FIR as a sample-gated block: the internal tap history advances only when a new sample arrives from the MCU. In addition, the filter is implemented as a sequential multiply-accumulate engine rather than as a single large combinational summation. That choice slightly increases the internal latency, but it dramatically shortens the critical path and still leaves a wide performance margin because the ECG sample stream is slow compared with the 27 MHz system clock. In practice, this is what transformed the FIR from a conceptually correct block into one that also meets timing on the real FPGA.

2.2.2 ADC

The ADS1115 serves as the bridge between the analog ECG front-end and the digital processing chain. It converts the conditioned output of the AD8232 into 16-bit samples that can be read reliably by the microcontroller over I^2C. In this project the practical workflow is simple: the MCU configures the converter once, points the internal register pointer to the conversion register, and then reads the two-byte conversion result at the desired sampling rate. In other words, the ADC is not conceptually complex in the final system, but it is the component that defines the raw data quality seen by every later digital block.

Limits

The most important electrical limit for the ADC in this design is that the analog input must remain inside the converter supply range. Since the AD8232 output is centered near mid-rail, roughly around 1.5 V, the PGA setting and the effective gain of the analog chain must be chosen so that peaks in the ECG waveform never drive the ADC into clipping. If the analog signal clips here, no amount of later digital processing can recover the lost information, so this is a constraint that must be respected before any FPGA algorithm becomes relevant.

2.2.3 Microcontroller (XMC_2GO)

The XMC14_2GO board acts as the acquisition and supervisory controller of the system. It reads the ADC over I^2C, packages the resulting samples, and sends them onward to the FPGA through SPI. This makes the MCU the part of the design that defines the system's sampling rhythm, while the FPGA consumes that rhythm and performs the repetitive signal processing.

From a low-level programming perspective, the board remains useful because it exposes a simple register-oriented environment for experimentation. On the XMC 2Go board, the two user LEDs are connected to port pins P1.0 and P1.1, making Port 1 a convenient place to verify basic GPIO behavior while the communication firmware is being developed. The Port 1 register block begins at address 4004_0100_H, so it offers a natural reference point for direct register-level testing before more abstract drivers are layered on top.

2.2.4 Clock Configuration

Clock configuration on the MCU matters because it affects how reliably the ADC can be polled and how precisely the outgoing SPI transactions can be timed. The XMC1100 start-up code allows the effective clock tree to be shaped through flash-programmed values that are loaded during start-up, so there is flexibility in balancing speed, peripheral availability, and power consumption. For this project, that flexibility is useful mainly because it allows the acquisition side to be stabilized first and then matched to the timing assumptions used by the FPGA design.

2.3 Interconnections

2.3.1 FPGA Pin Planning

The physical pin assignment became an important design step once the project moved from abstract HDL to a real Tang Nano 9K board. Because an external flash memory is used, the on-board SPI flash remains untouched and the FPGA can dedicate a separate four-wire SPI bus to the Winbond device. The design also avoids the group of LCD-related pins that were intentionally left unsoldered on the module in order to keep the SD-card area accessible for

later experiments.

In practice, this led to a compact and repeatable wiring plan. The 27 MHz board oscillator is connected internally to FPGA pin 52, the on-board **S1** button on pin 3 provides the active-low reset, the MCU-facing SPI interface uses pins 19, 20, and 25, the external flash uses pins 26 through 29, and the alarm output is exported on pin 30. This mapping is simple enough to wire by hand on a prototype, but structured enough that it can now be treated as part of the documented design rather than as an informal breadboard detail.

This pin plan also introduces an important electrical distinction. The reset button belongs to a 1.8 V I/O bank, so it must be constrained differently from the 3.3 V SPI and alarm signals. For that reason the reset input is described as `LVCMOS18`, while the communication and actuator pins are described as `LVCMOS33`. The Gowin `.cst` file therefore captures physical pin locations and I/O standards, while the separate `.sdc` file captures timing constraints such as the 27 MHz system clock. In the present revision, the timing file also declares the incoming MCU SPI clock explicitly and treats the MCU SPI domain and the 27 MHz core domain as asynchronous with respect to one another. Keeping these concerns separated makes the vendor flow easier to reason about and reduces the chance of accidental constraint errors.

2.3.2 Communication Strategy

SPI is used twice in the system, but in two distinct roles. On the first SPI link, the MCU is the master and the FPGA is the slave. This path exists purely to move ECG samples into the FPGA as reliably as possible, and the HDL explicitly handles the clock-domain crossing between the external SPI clock and the internal 27 MHz clock. In the current constraint set, that external SPI clock is described separately from the core clock so that the timing tool does not misinterpret the synchronizer crossings as ordinary synchronous logic paths. On the second SPI link, the FPGA becomes the master and drives the external flash directly. In that role it issues write-enable commands, transmits page-program operations, and polls the flash status register before advancing to the next memory page.

This arrangement gives the project a useful architectural rhythm. The MCU can remain focused on acquisition and protocol handling, while the FPGA processes the stream as it arrives and commits filtered samples to non-volatile memory in complete page-sized bursts. Even in its present simplified form, this already makes the prototype feel closer to a small embedded instrument than to a collection of disconnected development boards.

2.4 Current Status

At the current stage, the HDL design can be synthesized and routed successfully with the Gowin toolchain for the Tang Nano 9K target, and it now satisfies the timing requirements of the 27 MHz system clock. Earlier revisions were functionally plausible but too arithmetic-heavy in a single cycle, which led to large negative slack in the timing report. After restructuring the

FIR as a sequential multiply-accumulate block, moving the BPM estimation away from a single-cycle divider, and making the clock-domain assumptions explicit in the timing constraints, the design now closes timing with positive slack. In practical terms, the current implementation reaches an internal maximum frequency above the 27 MHz target, so the design is no longer merely synthesizable; it is also implementable with margin on the intended device.

The result is not yet the final signal-processing architecture envisioned at the beginning of the project, but it is a coherent and testable baseline: data can enter the FPGA from the MCU, pass through a real fixed-point filter, trigger a simple heartbeat detector, raise an alarm when needed, and be written to an external SPI flash device. That working baseline is important, because it turns the rest of the project from an abstract proposal into an iterative engineering task.

The next natural step is to refine the digital signal-processing path itself. The present detector is deliberately lightweight so that the full acquisition, buffering, and storage chain could be made to work first. Once that foundation is stable on hardware, the FIR stage can be expanded into a richer filtering chain and the QRS detector can be replaced by a more faithful implementation of the desired algorithm.