CHAPTER 1

TECHNICAL COMMUNICATION

LEARNING OBJECTIVES

After comprehensive study of this chapter, you will be able to;

- define communication
- list and discuss the concept of technical communication
- enlist types and barriers of communication with examples
- create styles for readiability
- write technical documents with computers

Scanned with CamScanner

The term 'communication' refers to the exchange of human thoughts, message and/or information by various means such as speech, visual signs, writing or certain behaviours. Crystal (2003) defines communication as the transmission and reception of information or message between source and a receiver using a signaling system. For any successful communication; there should be at least a sender, message and a recipient (receiver). Unless receiver is present in the communication, the whole process is not complete. It means, the receiver must understand the message of the sender in a successful communication. Otherwise, the communication breaks between the speaker and listener. We communicate not only through language of speech but also use body language, gesture, posture, etc. as a means of communication. The word 'communication' has been derived from the Latin word 'communis' which means common. Communication has been defined by many scholars, a few of them are given below;

> 'Communication is the process in which two or more parties exchange information and share meaning' **Moorhead and Giffin (2009)**
>
> 'Communication is the transference and understanding of meaning' **Stephen P. Robbins (2009)**
>
> 'Communication is the transmission of information and understanding through the use of common symbols' **Ivancevich, Donnelley, and Gibson (2011)**

There is much similarity in the definitions as mentioned above. Communication can be described as a process through which one person transmits information to another person through an appropriate medium. It is one of the oldest activities of human beings. It is a means of connecting people and places together. The interaction between two or more people, either verbal or non-verbal, leads to an understanding that forms the basis of communication. Human behavior and social relationships are the outcomes of communication. It is a process of reaching a mutual understanding. More specifically, it is a process whereby speech, signs and actions of human beings transmit information from one person to another. To involve in communication is an activity of conveying information through the exchange of thoughts, messages or information by using various means of communications like speech, visuals, signals, writing and behaviors. In case of written communication, writing or printed words are used to communicate the desired information.

Technical communication is the process of transmitting facts and information to a defined audience for a specific purpose. Generally, it is writing for understanding. Technical writing is is known as written communication for and about business and industry. It focuses on product and services. It is primarily composed in the work environment for supervisors, colleagues, subordinators, customers and general readers. Moreover, technical writers present information in science, medicine, electronics, computers, or other technical areas on a professional level, backed up by data and facts, so that the information is complete and accurate. This unit gives more detail about technical communication. The way we communicate reveals many things about us: our emotions, our view of the world, our interests, and our experience with different methods of communication. Technical communication differs from other forms of communication in several ways, including audience, purpose, and style.

Model of Communication

The traditional view of communication holds that communication is the transmission process by which two or more people exchange ideas, facts, feelings or impressions in ways that each gains a common understanding of the message. It takes place when the sender selects a certain message and gives it a special treatment for transmission over a selected channel to a receiver who interprets the message

Scanned with CamScanner

before taking the desired action. There are different models of communication process. However, we use one of them that draws on the familiar conventions of radio transmission. It represents a way in which information is regularly transmitted in the real world. Language works in a similar way to a radio transmission system. The information is encoded, received and decoded. In an ideal system, the decoded information would match the original exactly. In the real world, encoding and decoding are liable to distortion, the medium is not entirely transparent, there is noise or interference, and feedback is needed. The following diagram shows the process of communication:

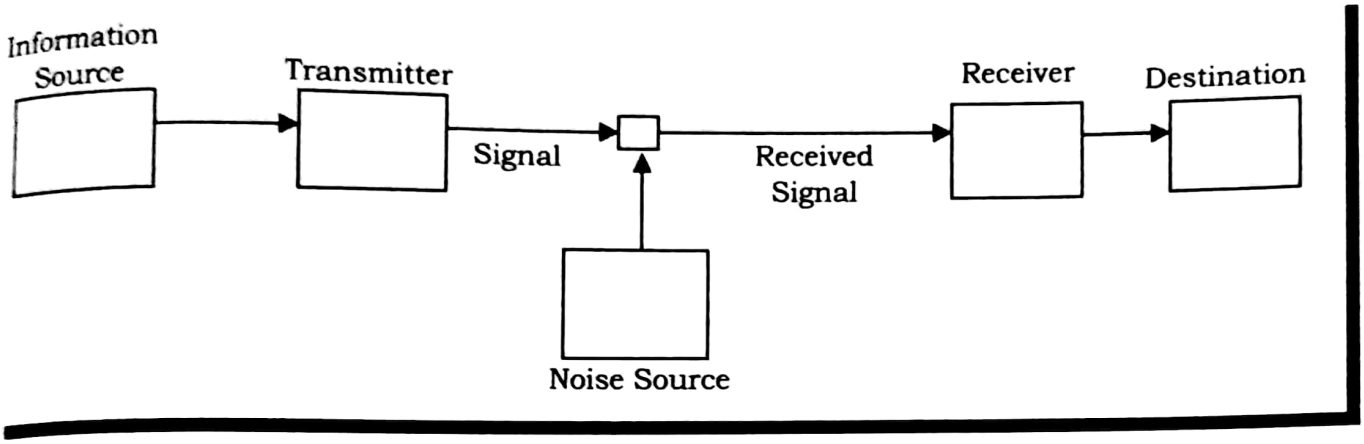

Fig: Model of Communication (Source: The University of Illinois Press)

This model can be generalized and applied both to communication in language and radio communication. The centre of communication is medium which links the transmitter and the receiver. They must both be tuned into the same medium. The writers' first job is to choose a particular medium according to the audience. They must ask: 'What type of information, of what complexity and in what language can the reader easily receive the message?'. Feedback plays a vital role in communication. It provides information about the completion of the objective of communication. Feedback accounts from zero level to full. The full feedback has the greatest effect on communication. Moreover, a free-flow pattern of feedback is the most effective for communicating messages to the audience as compared to other levels of feedback. In oral communication, feedback is given to confirm that the message is being received or understood by the listener(s). However; in written communication, feedback is delayed. So, a writer should be conscious about the free-flow pattern of feedback while composing a message.

ELEMENTS OF COMMUNICATION

Communication is the process of exchanging ideas, views, information, messages, knowledge and so on between two or more media. It is important in our everyday life in order to enhance our progress and make our life lore easier and comfortable. The elements of communication are stated as below;

i. **Source:** It is material or thing that provide information to people. Through the source, the communication starts. It is the source that further develops communication. It may be people, radio, TV, etc.

ii. **Message:** The source provides message to the receivers. It provides message which contains the main actions, ideas and sharings.

Scanned with CamScanner

iii. **Channel:** Messages can be provided from the source to the receiver through different channels. For example: messages may be broadcasted from TV, radio, e-mail, Internet, etc.

iv. **Receiver:** It is the people who receive the information. It may be normal people or mechanical apparatus who get information through different source and channels.

v. **Noise:** Noise refers to the disturbance caused during the transfer of message from source to receiver using different media. Such noise may lead to irritability and disturbance in the way of communication.

vi. **Feedback:** Feedback is provided by the receivers according to the information got from the sources through different media. It describes the receiver's response or reaction to the sender's message. For example: If a TV broadcasts a channel, audience or viewers give feedback about their likes, dislikes or suggestion.

Importance of Communication

Communication skills are a set of important attributes that highlight one's personality and career as well. It is hard to imagine a life without communication. It may also be very difficult to lead a life without communication. As communication is the exchange of messages, information, ideas, truths, thoughts, facts, etc.; it is very important for the day-to-day activities of human lives. We cannot even imagine the world without communication. The present world of globalization and commercialization is the outcome of human communication, cooperation and coordination. So, communication plays an important role for the exchange of human desires, intention, information, messages, thoughts, etc. Furthermore, people generally overlook or underestimate communication but the ability to communicate effectively is necessary to carry out the thoughts and visions of an organization. A good communication is important and unavoidable requirement to conduct a successful business. In any organization, the employees/workers communicate with each other to run their jobs smoothly. The superiors communicate with their colleagues and subordinates to complete their tasks, and everyone in the organization communicate with the customers, clients, government agencies, media, general public, etc. in their day-to-day business.

The 7C's of Communication

Effective communication is possible only when we follow the 7Cs of communication. There are many blocks and barriers to effective communication. By following 7Cs of communication guidelines one can make effective exchange of information for a successful communication. The 7Cs of communication are briefly described as below;

i. **Correctness:** Each and every word used in communication should be correctly spelled with appropriate grammar, mechanics or punctuation marks and without any grammatical mistakes.

ii. **Completeness:** The audience need complete information. Partial information cannot make effective communication. It is necessary to provide required information to the audience. An efficient communication depends upon complete information that makes communication more effective.

Scanned with CamScanner

iii. **Conciseness:** It refers to the act of conveying message by using fewest words. The words used in communication should be short and simple because viewers do not like wordy message. Every people cannot have time to study or listen the verbosity of your message. So, you need to concise your communication as much as you can.

iv. **Clarity:** It is the basic principles of communication. Every information provided through communication should be clear. It should be easily understood by the receivers.

v. **Courtesy:** It is the way of expressing ourselves to the audience regarding our discipline, punctuality and manners. The practical applications of good manners such as hand shaking, greeting, smiling and speaking politely, etc. come under courtesy. A sincere 'you' attitude creates a special tone in writing and speaking.

vi. **Consideration:** We need to consider receiver's interest and analyze the audience as; 'why the receivers should view my information?' We should always keep in mind about primary audience and add extra effects by improving the system of communication.

vii **Concreteness:** It refers to the message that is specific and based on facts, figures. The generic or irrelevant information may create misunderstanding between the sender and receiver. So, your message should be based on facts, figures and objectivity.

MAJOR FORMS OF COMMUNICATION

Any communication must go through the linear chain of Sender– message – Receiver or Speaker–spoken – Hearer or Writer – written – Reader. Communication, in general, can be done by adapting our five sense organs through speaking, listening, looking, touching, smelling testing and so on. These forms of communication are listed below;

Forms of Communication	Sense organs	Functions
Aural communication	ear	hearing
Visual communication	eye	seeing
Tactile communication	skin	touching
Olfactory communication	nose	smelling
Gustatory communication	tongue	tasting

However, for our purpose, there are there forms which are considered the major forms in terms of organizational communication. They are internal operational communication, external operational communication and personal communications as discussed below;

Internal Operational Communication

The communication that takes place within an organization, during the process of work is known as internal operational communication. This kind of communication is structured communication. By structured, we mean that such communication falls under the operational plan of an organization. In other words, the exchange of information and messages within the periphery/premises of an organization, while the organization is functioning, is called internal operational communication. It

Scanned with CamScanner

helps increase job satisfaction, safety, production and discourages absenteeism, turnover and technical flaws. Communication from all dimensions is the most necessary factor to run any organization to the expected goal. Such communication makes the employees to be organized, structured, time bound, goal oriented and devoted to their work where they belong to a particular organization.

External Operational Communication

The work related communication that a person does with people and groups outside the organization is external operational communication. Like internal communication, this belongs to the business communication with its public suppliers, service companies, customers, general public, government agencies, media, among the competitors and so on. The external operational communication plays a vital role for the promotion and operation of an organization as well as to achieve immediate transactions and develop the public relationship. No organizations can grow sans customers and other people who are directly or indirectly linked to them. This type of communication falls under the operational plan of an organization since communication is concerned with the work of an organization as well as other organizations. The employees are aware of the goals, visions and the plans of the organization and communicate accordingly for the benefits and progress of the organization.

Personal Communication

Personal communication is not a component or part of an organization's plan of operation. It is all that incidental exchange of information and feelings which human beings engage in whenever they come together. It is all about subjective expression of personal feelings and opinions of the people. Since human beings are social animals, they have a need to communicate and they will communicate even they have little or nothing to communicate.

Dimensions of Communication

The communicative message is encoded in the brain of the sender first, and then, it is sent to the receiver through some medium which might be vocal or visual the receiver decodes the message and then understands it. The sender is the speaker and the receiver is the hearer in case of spoken form but in written language the sender is the writer and the receiver is the reader. The mechanism of communication also follows the same processes. The flow of the message in organizational communication is directed through the following three dimensions;

Downward Communication

The communication that flows from superiors to subordinates is called downward communication. In other words, communication from superiors to subordinates in a chain of command is called downward communication. Such flow of communication is used by the managers to transmit work-related information to the employees at lower levels. The downward communication carries messages like job instruction, procedures and practices, feedbacks, etc. The downward communication can provide with what the employees need to know about the new tasks including goals and assignments of an organizations. A face to face meeting should take place for the effective downward communication. The meeting may be conducted in formal or informal settings so that the

Scanned with CamScanner

employees get better understanding than by other means of communication. This kind of communication is crucial for communicating the missions and visions of the organization. The downward communication is the example of internal operational communication because communication takes place within an organization and its operational plan.

Upward Communication

Communication that flows from lower to a higher level in an organization is called upward communication. It provides feedback on how well the organization is functioning. The subordinates use upward communication to convey their job related problems, fellow employees and their problems, financial and accounting information and performances to their superiors. A business report from the branch manager of a company to the managing director of the company is an example of upward communication. The upward communication involves the transfer of information, request and feedback from the subordinates to their seniors. It promotes better working environment and relationships within an organization by giving the subordinate staff opportunities to share their views and ideas with their supervisors. It can also be used by the employees to share their views and ideas and to participate in the decision-making process. This dimention of communication often leads to a more committed and loyal work force in an organization because the employees are given chance to raise and speak on issues to the higher levels. Like downward communication, it also belong to the internal operational communication.

Horizontal Communication

The flow of messages across any functional areas of the same levels of an organization is called horizontal communication. It takes place among the employees of the same level or hierarchy. Communication between peers, between managers, same level officers or between any horizontally equivalent/equal organizational members is known as the horizontal communication. This dimention allows people at the same level to communicate directly. Such communication helps in problem solving, information sharing across different work groups, tasks coordination between departments of work, team etc. Besides, it gives chance to coordination, information sharing, solving conflicts within any departments. Moreover, it provides a good access to socialization and provides emotional and social assistance to create friendly environment among the employees.

Types of Communication

Communication needs a medium to become successful and there are various means or mediums of communication. Human beings communicate either by speaking or writing, or by the means of visual signals to transfer messages. Communication can be classified into two types; verbal and nonverbal communication. The verbal communication incorporates speech sounds and writtern words and phrases. However, the nonverbal communication incorporates with body language, sign language, paralanguage, haptics and time language. If anyone underestimates such cues, there may arise non-verbal conflicts and misunderstandings. The types of communication are discussed as below;

Scanned with CamScanner

Verbal Communication

Verbal communication is defined as any communication that uses words to share information with others. These words may be both spoken and written. Some examples of verbal communication are speeches, presentations, announcements, etc. The verbal communication includes both oral and written communication.

Oral Communication

Oral communication is widely used in interpersonal communication. It is the verbal communication that uses the spoken words either face to face or through telephone, video chat, or any other medium. Oral communication uses the spoken words. It can be formal like conferences, seminars, meetings, lectures etc. and informal such as rumours, grapevine and so on. Oral communication is used in formal discussion and causal or informal conversations. The effectiveness of oral conversation depends on the clarity of speech, voice modulation, pitch, and speed and even the nonverbal signals such as body language and visual signals. It makes the process of communication easier and faster, and has remained the most successful form of communication. Feedback in oral communication is immediate and direct.

Written Communication

The communication in the written form is what we call written communication. It is the most formal and widely used method of interpersonal communication. It includes documents, e-mails, text chats and anything else conveyed through written or typed symbols. This type of communication is indispensable for formal business communication and legal instructions. Written communication is the basis of any organizations as it works as a formal way of communicating messages. Moreover, its importance cannot be denied since record of any formal communication is possible only through written symbols. It includes official letters, handbooks, contract papers, memos, press release, business proposal and so on. The effectiveness of written communication depends on the writing style, grammar, vocabulary, mechanics and clarity. However, feedback in written communication is delayed or no feedback at all as compared to oral communication. There is often a single cycle of feedback in written communication.

Non-verbal Communication

Non-verbal communication is the non-linguistic transmission of information through visual, auditory, tactical and kinesthetic channels. It includes the use of visual cues such as body language, distance and physical environments, voice quality and touch behavior. The forms of non-verbal communication are proxemics, kinesics, oculesis, chronemics, para-linguistics, artefacts, gesture, postures, haptics, olfactics, physical appearances, etc. The various types of non-verbal communication are briefly discussed as follows;

Types of non-verbal communication

1. **Kinesics:** It refers to the non-verbal cues of body movements that include gesture, posture, movements of bodily organs, etc. In other words, the use of our body to convey our message is known as kinesics. We use our body both voluntarily as well as involuntarily to convey our message. It is also known as body language. It helps to identify what the person is trying to tell. The types of non-verbal are as follows;

Scanned with CamScanner

a. **Personal appearance:** By looking people's personal appearance, we can identify what and how s/he is going to talk or behave. Their personal appearance indicates about their behavior and moral characters. We also talk by observing people's personal appearances. If we see the person's gentle attire then we use polite and more formal language. On the other hand, we use impolite and casual language if we are talking with the person with rough attire.

b. **Posture:** It tells about the way that we want to communicate with sitting behavior. It is the way of people how they sit, stand or walk. We can also know about how the person is feeling the information by observing the posture occupied by the interlocutors. Let us study the meaning of some sitting posture.

Sitting Posture		Meaning
slumped	-	person is inattentive
erect	-	person is attentive
lean forward	-	interested
lean backward	-	uninterested
hand crossed	-	person does not want to communicate
hand opened	-	person wants to communicate freely

c. **Gesture:** It is a movement that you make with your hands, head or face to show a particular meaning. It helps to communicate by making several gestures with other people. Gestures are planned actions, serially ordered, dramatically specified to convey non-verbal meaning.

d. **Facial expression:** The facial expressions are emoticons of our face. By looking one's facial expression, we can identify some information about what the person is trying to convey the message. But sometimes, people try to hide their true feelings by making false expression. Some of the expression are happiness, anger, depressed, anxiety, sadness, etc.

e. **Eye contact:** A normal eye contact is very important for communication but negative staring should be avoided. It helps to show that the person is listening and conveying the message. So, everyone needs to make proper eye contact while delivering or conveying message.

2. **Proxemics:** This is the space between the sender and the receiver. By looking at the space between them, we can identify what type of communication is maintained by the speaker and listener either in formal or informal setting. It means, the distance between or among the people during conversation plays an important role in communication. The distance may be intimate (touching to 18 inches), personal (18 inches to 4 feet), social (4 to 12 feet), and public (12 feet above). The types of proxemics are;

a. **Intimate:** This space lies between physical touch to 18 inches. It shows the relation between husband and wife, child and parents, lover and beloved, etc. In this type of non-verbal communication, people can talk freely as they like.

Scanned with CamScanner

b. **Personal:** This space lies between 18 inches to 4 feet. It is the relation of relatives, friends, etc. We can use both formal and informal communication as mentioned below;

formal - friends and relatives

informal - close friends

c. **Social:** This space lies between 4-12 feet. In this group, we have our society members, neighbours, office people, acquaintance, etc. and we need to maintain formality.

d. **Public:** This space lies between 12-25 feet or more than we can ever listen or hear. In this space, we have the public people and space is maintained during giving public speech, seminar, conference, etc. In this space, there are people with whom we even don't know.

The other spaces may be global i.e. beyond the horizon and cosmic space related to the whole universe.

3. **Chronemics:** It refers to the nonverbal communication related to time It is the way that our time speaks. The people who value the time are good at everything. The people who do not value the time are supposed to be carefree. If the person reaches to the interview too late then s/he is supposed to be careless and disqualified person. On the other hand, if the person reaches too early then s/he is supposed to be free and if s/he reaches in time then s/he is supposed to be punctual and know about proper time management. People need to communicate according to time.

4. **Haptics**
It refers to the touching behavior of non-verbal communication. It includes hugging, kissing, handshaking, etc.

5. **Olfactics**
It is non-verbal communication related to the sense of smells.

6. **Para-lingual**
It refers to the nonverbal communication related to rhyme, rhythm, tone, tempo, volume of the speech, etc.

7. **Silence**
It refers to the time which shows how much duration of time a person takes while communicating. It is also known as turn-taking.

In this way, communication is the process that involves sender and receiver. There may be verbal or non-verbal exchange of information during communication. Words and phrases are used in vernbal communication; whereas, physical context, eye contact, touching, greeting, handshaking, kissing, bowing, smiling, smelling, posture, physical appearance, etc. are some of the behaviours reflected by the non-verbal categories.

BARRIERS TO EFFECTIVE COMMUNICATION

In the above sections, we described several forms and dimensions of communication. In fact, effective communication is not so easy. There are many blocks and barriers to effective communication. Because of these barriers, the elements of communication such as message, transmitter, receiver and received message cannot work properly for the effective exchange of information from one medium to another. To gain maximum efficiency, you need to know about the barriers of communication. The following are the major barriers or faults to effective communications;

Scanned with CamScanner

1. *Language barrier* is one of the major barriers to effective communication. It takes place when there does not exist a linguafranka or common contact language. If both the receiver and the speaker do not know each other's language and such situation may lead to the barrier in communication.
2. *Cultural differences* can be the barriers to effective communications. Cultural variation may result into the variation in language use. So, culturally different people may not be able to communicate properly. Moreover, non verbal signals and costumes may differ from one culture to another which become the barrier.
3. *Emotions* are psychological barriers to communication. The emotions like hostility, anger, fear, stress etc. can be the barriers to effective communication because human behavior and speech are highly affected by their emotions.
4. *Political beliefs, values and attitudes* can also be the barriers to effective communication. If the people of different political background are involved in the process of communication, there may no be an effective communication.
5. *Biases/ prejudices* are also the barriers to effective communication. The perception of messages varies in great degree if the bias or prejudices regarding age, gender, ethnicity, disability, etc. prevail in the message.
6. *Physical Barrier* is one of the barriers to effective communication. The participants from distant places may not be able to send or receive the intended message correctly. So, the physical distance between the workers in workplace can become barrier and create lack of communication too. People's physical disabilities to communicate are also the physical barriers.
7. *Use of jargons and technical terms* may pose barriers to effective communication. The over complicated or unfamiliar terms and vocabulary may be the barriers to effective communication. So, be careful while using technical terms during communication.
8. *Lack of attention, interest, distractions and irrelevance to the receiver* are the barriers to communication. Such barriers may arise when the filter of our mind does not work properly.
9. *Overdose of information* can also be the barrier to effective communication. The maxim of conversational principle states that contribution of the participants should be as informative as required for the communication. So, it should not be unnecessarily informative because less than sufficient information may encourage inference and more than sufficient information may confuse the listener. Moroever, the insufficient information may cause boredom, exhaustion and confusion, etc.
10. *Poor communication skill* is another barrier to effective communication. People with poor communication skills are less likely to contribute to effective communication. They may not have a default language to communicate or they may have cultural differences that caused barriers to effective communication.

STYLE FOR READABILITY

The word 'style' is usually associated with literary writing. However, the style here means to adopt language code to particular ends. Language can be used for a variety of purposes. It can be used to announce or warn (notices), instruct (operating instructions), persuade (advertising), and inform (reports and articles). The efficiency of writing style can be measured only in relation to the purpose of the writing. If the purpose is to give pleasure, then attractiveness becomes one of the criteria of the

Scanned with CamScanner

efficient manipulation of the code; but if the purpose is to warn or to instruct, then notices like 'Keep off the grass' are admirable. They manipulate the resources of the code to achieve their ends. It means, they have good style. There is distinction between imaginative literature and functional writing. We are concerned with the effective style for the communication of information in technical writing. Style for functional writing should be unobtrusive, an invisible medium, like a window pane through which the information can be clearly seen. However, lapses from good taste, or unacceptable usage may disturb and distract the readers. The effective style may contain a variety of structures and usage, and will not ban any feature of language code. The poor quality of much scientific and technical writing is the result not of misguided attempts at styleness, but of attempts to use only a restricted set of choices from the language code.

The studies on readability have shown that long sentences make text more difficult for readers to comprehend and absorb. Many readers may not identify the causes that distract them from readability. Consequently, they attribute their growing discomfort to lack of concentration or ability. They may also think that a difficult subject, rather than a difficult style makes their tasks unpalatable (disgusting). So, the effect of sentence length on readability is indisputable.

Long sentences are difficult to read. They overfill the short term memory while decoding the information. What happens is that our short term memory retains all the words until it can extract the content and store it permanently in long-term memory. The beginning words of the long sentences may be forgotten by the readers when they reach at the end of the sentence. So, the writers should adjust sentence length according to their readers. For adjusting sentence length, consider the following points;

1. Use flexible sentence length.
2. Limit sentence content.
3. Be economic on the use of words.
    a. Be careful in word choices.
    b. Choose short over long words.
    c. Use familiar words.
    d. Use technical words with caution.
    e. Avoid over use of camouflaged verbs.
    f. Avoid cluttering phrases.
    g. Eliminate surplus words.
    h. Avoid roundabout constructions.
    i. Avoid gender and disability biased words.
    j. Avoid unnecessary repetition.
4. Determine emphasis in sentence design.
5. Give the sentences unity.
6. Avoid illogical constructions.
7. Give life with words to your writing.

To maintain suitable style for readability, follow the grammatical and mechanical rules appropriately. See unit fourteen and fifteen of this book for more detail.

Scanned with CamScanner

WRITING WITH A COMPUTER

Learning to use basic features of computers and word-processor software will help to produce better text in less time. No matter what system you are using, you should become familiar with the basic formatting capabilities. You may also need an introductory training or a few hours of exploration on your own. Depending on the types of text you are creating, the following discussion may help you to write your text with a computer.

Using a Word-processor

The majority of writers now use computers (as word-processors) for their writing. The use of computers does not change the principles of good writing, but it does make achieving them easier in many ways. It also calls for extra care over the writing process. Word processing changes the way text is created and extended, and the ways in which the writers think and work. At the simplest level, a word processor is little more than a clever typewriter, with electronic correcting fluid. The main advantage of the word processor is the ease with which mistakes can be corrected. Clean copies can be produced without the need to re-type the whole document. The labour of typing several drafts is eliminated, and the temptation to let a draft through with small mistakes disappears. Final copies are clearer, neater, and should be error-free. Revision is the corner-stone of good writing, which becomes a regular practice rather than a distant ideal.

With a manual keyboard, revisions are possible; but to see their effect properly requires complete retyping. The word processor makes it possible to revise documents bit by bit, and to see the effect of each batch of alternations without having to go through the labour of retyping the whole text. You can use the same technique of rapid writing when you revise, as when you write the first draft: read rapidly, and mark passages, words, and sentences that need looking at carefully. If you stop too long to wrestle with a hydra of a sentence, you will distort your memory of the overall shape and flow of writing. The techniques that we have found useful are to mark the passage with a row of stars, or to have a quick shot at drafting an extra sentence or two to clarify the points. We do no more until the next clean print-out is ready. Then what is needed is usually clearer. Typically, we can find one of the three things becomes clearer as;

- The original sentence can be deleted, leaving the new sentence(s) to sit among the rest.
- Half of the new sentence can be deleted, together with half of the original sentence, and the halves welded together to make a reshaped whole.
- A few more sentences are obviously needed, and they can be drafted in.

Computers make many of the mechanical aspects of writing easier, and increased ease and speed, help the writers overcome the difficulties inherent in composing coherent and cogent text. However, externalizing thought in an orderly and stylish form is still not easy. For all their automation, computers are not thinking machines. They make easy to take words out and put words in, but you still have to make the judgments about which words must be changed. The machines can save some time and much of the boredom involved in repetitive work. But they cannot compose text for you. They cannot decide what information you need in a relying to a customer's enquiry. They cannot decide how much data to include in your progress report. They cannot choose the most persuasive way to organize and express the information you know will be needed to convince a finance committee to give you capital for a project.

Scanned with CamScanner

Using Word-processor to Plan and Organize Documents

A word-processor makes it easier to plan a document. Your first thoughts about the sections required can be typed straight into a 'file'. If another arrangement of material subsequently seems better, you can shuffle those thoughts around easily. New notes, ideas, details, facts and figures can be inserted under appropriate headings. Do not worry about making final decisions about order in the early stages. A heap of notes can be put in one section in the order in which they are discovered. Then, you can use a print-out of that section to work out an order of sub-sections. The notes can be allocated to sub-sections by penciled directions in the margin. Back on the word processor, you can rearrange the notes quickly, and produce another print-out, if necessary.

However, it has always been possible to modify typescripts by the 'scissors and paste' method; but this produces a scruffy-looking text, in which it is hard to see, literally, the form and force of your document. If you use a word processor, it is easier to add notes about points that have occurred to you during a study session in a library or while you were listening to a lecture. Ideas and facts scribbled on the backs of envelopes, and in the margins of books and papers, can be inserted quickly into the appropriate section of your document. As soon as, the new information has been inserted, the scribbled notes can be torn up and thrown away, so that there is no build up of untidy fragments. Another print-out will enable you to see what you have achieved, and help you to see what further modifications and alternations are needed.

Revising Style

The word processor encourages revision of style, because it shows the writer immediately on the screen the effect of breaking long sentences or reconstructing clumsily expressed phrases and clauses. It becomes much easier to use a policy of writing rapidly, ignoring problems of precise phrasing during the creation of the first draft. Writers creating a text in handwriting or on a typewriter tempted to pause and try to get things 'right' the first time through, because they know the labour of rewriting or retyping will be so great. This interrupts the flow of ideas. Writers using a word processor do not feel so inhibited by the labour that will be involved in revision. They know that it will be easy to insert and rearrange words, and to reprint the whole or part of a page or chapter. In this way, the use of word processor encourages flow in writing, and resolve shortcomings while reviewing the readability of the text.

Disadvantages of Word-processing

Word processors are revolutionary tools that help in the creation of readable text; however, they can just as easily help in the creation of mindless drivel. Another disadvantage of word processor results from the act of 'cutting and pasting' information. In this process, the chunks of information might have been cut out that show the signs of crude word processing. However, the word processing allows a careful revision and adjustment of the surrounding words, phrases and sentences, it is necessary to read and revise the whole document to make it readable to the audience. The other disadvantages of word processor are listed below;

- Word processors can encourage monotonous repetition of words or whole chunks of texts.
- The operation of revision and reprint of text can lead to uneconomic use of the capacities.

Scanned with CamScanner

- The process that machines can up-date and add to texts can lead to verbosity (wordiness).
- Constraints imposed by word processors and computers can cause writers to put convenience of their machines above the convenience of their readers.

Computer-aided Writing

The computer can speed up, and even automate, many of the routine checking tasks in writing. The growing range of computer-based 'tools', generally will lighten the burden on writers, and improve the quality of administrative and technical documentation. Such tools or programmes will help inexperienced or inexpert writers to produce more readable texts. They can act as an extension to word processor and operate as simple sub-editors. Such tools query parts of the texts that do not confirm to norms that have been established by the tool-creators.

The spell-checker tool has almost been universal in word-processing software. In practice, most writers can spell most complicated words, but have a random set of minor errors in their spellings. And they make far more typing errors than spelling errors. Since a typing error is often very different from a spelling error, different tactics are needed to correct it. An intelligent spelling-checker, for instance, can solve the problems of both types of errors as far as the checker knows.

Another 'tool' is a program that looks for clumsy or cliché-ridden phrasing. This tool works in a simple way. For example; the program '*dict*' is built into the UNIX (TM) computer-operating system which contains a list of disagreeable and awkward phrases as a device known as 'pattern matcher'. This recognizes the pattern of letters which make up one of these banned phrases, whenever it appears in the text, and the program will ask the writer to change or correct them. In addition, grammar-checkers are also available to support word-processing programmes. By using this tool, the writer can produce a readable text to the audience. The latest generation tools are more sophisticated and extremely convenient to use them. They make easy for writers to insert correction. However, these new aids to writing could be sadly misused. The more powerful the machines, the more they separate the users into the dull and the imaginative. It would contain either active or passive construction which would produce a dull and repetitive piece of reading. However, the ability to recognize grammatical features could also be used intelligently to produce a suitable text to the readers. On the other hand, the ability to manipulate language in word-processors will never relieve the writers from their responsibility for writing creative texts. The programmes, undoubtedly, will produce coherent commentaries on the style of the text and urge writers to make maximum use of all the aids available to them.

The development of word processors will not remove the need for attention to the basic techniques of writing. It will not bring magic formula to make writing suddenly effortless. The real effort in writing is in the thinking required for planning and preparing, in the judgment required for organizing and laying-out, and in the continual need for sensitivity in the encoding of ideas in words and phrases. In comparison, the mechanical labour of producing and sub-editing text is small. Electronic devices can reduce this mechanical effort many times, and therefore release energy and time for thinking. But they cannot reduce the effort of thought.

Scanned with CamScanner

WRITING ELEMENTS

In this section, we discuss about technical definitions and technical descriptions. The former element is subdivided into as many four types and technical descriptions can be described in terms of comparison, analogy, technical slangs, and physical and process descriptions.

Technical Definitions

Definitions of terms are the foundation of technical writing. A precise set of terms is used in technology, and only with a common understanding of those terms can information be communicated accurately. Some terms used in technology have meanings entirely different from those with which you are familiar in everyday life. Some of the examples of technical words are power, force, and communication, etc. For example; the term communication used in casual conversation can include speaking, listening, reading, writing, and body language. But to an electronic technician, if the message wasn't transferred electronically, it wasn't communicated at all. In fact, the study of communications systems begins with Samuel Morse's invention of telegraph in 1837, even though we all know that throughout history, people have been sending verbal and non-verbal messages to anyone who would pay attention. Some of the important types of definitions are focussed as below;

Types of Definition

There are informal, formal, dictionary and extended definitions.

1. **Informal Definition**

   The definition which is marked by the absence of formality and suitable to characteristics of ordinary, casual and familiar speech or writing is known as informal definition. For example:

   Resistance: opposition to current flow.

   This is an informal definition. The informal definition is usually placed between commas or parentheses. For example;

   A potentiometer (variable resistor) is used for volume controls.

   If too many informal definitions are used, a report may become disjointed and distracting. Normally, a writer who plans on using more than two unfamiliar technical terms in a report will define the terms formally in introduction or glossary.

2. **Formal Definition**

   The definition which is relating to form or essence of a thing concerning structure relationships, or arrangement of elements rather than content is called formal definition. A formal definition has two functions: it identifies the larger class (group or category) that the term belongs to, and it provides distinguishing characteristics as;

   Term > Class > Characteristics

A formal definition can be written for any technical term, and often the most difficult part is determining the class. For example; is resistance a device, a quality, a capability, or an action? Technicians must occasionally make such subtle distinctions. For example;

Scanned with CamScanner

Device	Quality	Capability	Action
resistor	resistance	resistivity	resist
module	modular	modularity	modulate

For example; resonator is an object, something you can touch, so it would be in the class of devices. Resonate is a verb, so it is a process or action. The resonant is how we describe an object, an adjective, so it is a quality. Resonance is the capability of performing the action.

Once the group has been determined, technicians usually don't have much trouble in furnishing the distinguishing characteristics. For example;

A resistor is an electronic device

(term) (class)

that is used in electronic circuits to oppose and control current flow. Its capacity to resist current is indicated by color code or stamped values.

(distinguishing characteristics)

Compare the above example with the following definition:

Wrong: A resister is an electronic device that resists current flow.

The above definition of resistor is wrong because the same word resists is used instead of its synonym or similar word 'refuses or accepts'.

3. Dictionary Definitions

Dictionaries are written for certain audience. A small, pocket-sized dictionary may provide only the most commonly used words and definitions. Similarly, technical or scientific dictionaries may offer only technical terms and definitions. On the other hand, 'College Editions' and large dictionaries may include the commonly used definitions as well as extensive number of technical definitions of terms that are used in different scientific disciplines. So, a technical writer should use dictionary definitions according to the reader or audience who need to read technical information.

4. Extended Definitions

Some objects or concepts require more than one sentence definition and such definitions are called extended definitions. An extended definition may be as long as a paragraph or even several pages to fully define a complex concept or object.

For example; an extended definition of 'Harassment'.

> Harassment is words or actions that are designed to threaten, intimidate, and/ or make a person's work place or educational environment unbearable and intolerable. E-mail can be harassing. If harassment occurs in the workplace and is directed toward employees of a certain race, ethnic group, age, disability, religion, or gender, then it is a violation of state and local government laws. If harassment is an educational setting and is directed at students, then civil rights laws prohibiting discrimination in educational and/ or public institutions are violated.

Scanned with CamScanner

Technical Descriptions

Technical descriptions can be part of a larger report or a report by itself. It is especially important when the report concerns a device, tool, process, or concept that is new or unfamiliar. Descriptions typically include a definition of the object or idea, an orientation to the overall characteristics, followed by detailed descriptions of the parts in a logical order. For example; to describe a device, a writer would first describe the functions of the device, then the writer would describe the physical appearance of the object and its component parts, one by one, in the order in which they appear or play into the larger function of the device itself.

1. **Comparison**

Technical descriptions sometimes compare unfamiliar objects or concepts to familiar objects or concepts. In technology, people need to express values, shapes, angles, and joints in concrete, meaningful terms. To do this, we need to use familiar or graphical terms to describe size, structure, and location.

We compare location and shape of parts to familiar anatomy such as screws have heads, saws have teeth, and roads have shoulders. Similarly, circuits have elbows and legs. We use shapes of letters and symbols to define the shapes of parts and joints. For example, filters can be L-type, T-type, or π-type. The basic weld-joint designs include the square groove, bevel groove, U-groove, J-groove and V-groove. Similarly, workers install the I-beam and construct the K-brace, J-strip, P-trap, and so on. Many fields use this abbreviated method of describing a complex design or shape to add exactness to their language. You can examine terms in your own career field to find more examples of comparative terms. For example;

> A word processor is a piece of software that enables a computer to function like an automated office. With the software, the computer works as a typewriter so that you can create your own files: memos, letters, reports, and graphics. The computer memory, commonly a disk, acts as a file cabinet from which you can retrieve files, edit them when necessary, and save files indefinitely. Acting as a secretary and a copier, the word processor controls the format, type font, and number of copies to be printed on the printer. Some word processors also contain a dictionary and thesaurus to check spelling and word choice and a mail merge function for automatic addressing, which relieves secretaries of these duties.

In the above example, a word processor (technical) is compared with a familiar concept, an office (non-technical) as;

Office	Word processor
Typewriter	Computer
Memos, letters, reports	Files
File cabinet	Computer memory (disk)
Secretary and copier	Printing function
Secretary	Dictionary, thesaurus, mail merge

In this way, comparisons are useful for explaining and understanding.

2. **Analogies**

Analogy is a formal comparison based on the resemblance of two unrelated objects or ideas. For example, professors often compare current flow to water flow. This analogy continues throughout the study of electronics to make the principles and purposes of devices more concrete. An analogy is useful only if the two concepts have more than one similarity. As in the

Scanned with CamScanner

analogy of water / current flow, the flow of current behave not only like flowing water but also like water buckets that store and release water, and circuit gates are similar to floodgates.

3. **Technical Slang**

The technical writers should avoid technical slang and words within a specialized area that are unfamiliar to the public. This suggestion is important when communicating to customers, superiors, or subordinates, who might be confused by the slang terms. As a communicator, it is the writer's job to prevent misunderstanding which can be done by using the most common, yet accurate words as possible. On the other hand, the writers make overuse of comparison to colour their words. Such overused comparisons are called clichés, and they should be avoided in technical writing.

4. **Physical Descriptions**

The technical description of an object generally starts with the general information, and proceeds to specific information. Regardless of the object being described, a physical description has the same purpose i.e. to present the facts about the object. Technical writers use descriptive terms carefully and precisely, with exact terms. They use modifiers sparingly, but when they do, the modifiers are adjectives that add meaning, such as parallel, perpendicular, cylinder, or grainy. So, avoid abstract and vague words such as nice, very, really, a lot, or pretty with certain types of information that add meaning to physical descriptions in terms of colour, size, shape, texture, quantity, and part names. A typical outline for a physical description contains the following elements;

- Orientation to the object or device, including a technical definition, and when and why the device is used.
- General description of the device, including the overall dimensions, appearance, and components of the device.
- Description of each component, in sequential or logical order, including its physical appearance, purpose, and relationship to other components.

5. **Process Descriptions**

The technical description of process describes how something works, beginning with general information about the overall function of the process, and proceeding to the specific materials or skills required. The description can include a flowchart or schematic chart to show the sequences of actions or decision points in the process. For example;

Puma Rob of Drawing Project

How it works:
The project uses a Staubli Puma 562 robot arm donated by IBM and interfaces it using a number of software pieces written in C++, Perl, and VAL II. The objective is to manipulate the arm to draw on a canvas. The remote user downloads the software and executes the programs. If successful, the user connects to the robot arm. The robot moves to home position, activating the room lights. The user now selects a pen colour and, through a series of programmatic commands, directs the robot to grab a pen and draw on a canvas.

The above process description includes a line drawing of the robot arm, and describes how the robot arm works in the project. A typical outline for a process description contains the following elements;

Scanned with CamScanner

- Orientation to the process, including a technical definition, and when and why the process is performed.
- General description of the process, including the main divisions of the process, materials, skills, and time required; and pre-operation conditions.
- Description of each step in the process, including why and when it takes place, how long it lasts, and any human intervention required.

WRITING DESCRIPTIONS AND EXPLANATIONS

Descriptive writing is the process of using precise details to show the way something looks, tastes, smells, sounds or feels. It appeals to one or more senses of the five senses such as - sight, sound, taste, smell and touch. The writer should have ability to appeal the senses while describing, a person, object, event, situation or operation and process. Description writing involves different forms such as travel articles, advertisements to science reports. Writing description needs special tactics. The aim of description is to create in the readers' mind a clear picture of a process or a piece of equipment. Unlike instructions, descriptions are not restricted in the choice of structure and tactics. However, an established useful basic strategies will be helpful for writing descriptions.

Write Description Stage by Stage

Description writing should be based on different stages that a process or action gets into detail layer by layer. General statements, overviews and definitions at first, they orient the readers' mind. The following basic questions should be answered while writing a description;

- What is it like?
- What is it used for?
- What does it consists of?
- How does it operate?
- How do you use it?

A Car

A car is a metal structure about 5 m by 2 m high, with wheels at each corner.
It transports people over distances too great to walk.
It consists of a passenger compartment, with seats and windows, an engine for motive power, and steering, braking and warning systems.
The engine burns petrol to produce motive power which is used to drive the wheels forward.
One seat is provided with hand and floor controls to guide the car, and to control starting, accelerating and stopping.

Use Logical Order in Description

The logical order for description starts with familiar and general, and moves by stages towards the specific and detailed. Language itself operates on the same principle. For example, 'light-pen' is not a pen, since it does not draw, or use ink; but it looks more like a pen than anything else. It is used to make the computer draw. So, the name 'pen' is used by analogy to describe it. The adjective 'light' distinguishes it from any other type of pen such as 'fountain pen', 'ball pen' and so on. The same

Scanned with CamScanner

principle of analogy and differentiation is applied to something to naming at first in description writing. The most convenient way of describing something is to say what familiar object it resembles. What ways it differs from that familiar object. Definition is the process of comparison and distinction, which works in stages from a familiar general category to a specific example.

Secondly, the readers want a description of what the equipment looks like, and a description of its general function. Finally, the component parts can be specified and described in description writing. The same logic as described at first is applied in each sub-division. For example; the description of the 'light-pen' was a part of a larger document describing an interactive computer terminal. Each element in the system such VDU, light-pen, the key-board, the software, etc. received a separate description. Each description followed the sequence of general definition, appearance, components, functioning and use. While describing complex equipment or processes, the writer meets one of the limitations of language. Such descriptions cover the page in a steady sequence, and contain no loops or repetitions. However, most machines can do more than one thing at once. The moderate complexity is likely to have loops, repetitions, and simultaneous activities. Language can never reproduce the operation of the system, but it can reproduce the sequence of the operation of the system along with the readers' attention to understand the system. Moreover, it is beyond human capacity to read two parallel pieces of information at once. Language is linear and we can fully attend to one thing at once. So, the writer can sequence their language to direct the readers' attention in a comfortable progress.

Explanations

Explanations go beyond description. The explanation goes further and says why and how something works; however, it is similar to writing description. In explanation, first give a general definition in terms of aim, purpose, or the result of the process or system. Next present a general statement of the theory that lies behind the process or system. The general statement is about how the process or system is operated. Then, give an over-view of the component parts. At last, give the details of the individual elements in the process or system, and the way they operate can be given in the order.

The writer should break the whole system or process into manageable number of separate sub-systems which helps the readers to grasp a complex system in a perceivable manner. The hierarchical structure can be easily grasped and remembered by the readers. So, the writers should explain the sequence that fits into the context of a complex system. The mind can remember detail only if it fits into a pattern. Unlike description, the repeated stress of sequence and aim helps to reinforce the mental image of overall pattern, and assists both understanding and memory while reading explanation.

WRITING IN EXAMINATIONS

Most of us find examinations stressful, and when our full-time education comes to an end, we vow that we shall avoid being examined in future. But in modern business and industry, the introduction of new technology frequently means that we need to qualify in the use of new skills; and as we become more senior, we find increasing need for further training in management and business-school studies. Above all, effective writing in examination should meet the following criteria;

- Relate your new information carefully to your readers' existing level(s) of expertise.
- Discard information that you have available but that would be irrelevant to your readers' immediate need.

Scanned with CamScanner

- Avoid jargon or inflated vocabulary that your readers will not know or need.
- Acknowledge the following points when you are writing in examination
  a. Your information is rarely new to the examiners.
  b. You are really writing for readers who have a lower level of expertise than yo have.
  c. Display your knowledge on the basis of how much you know rather than th ability to select only what will be needed to equip your readers to take a decisio or complete a task.
  d. You are often expected to introduce specialist terminologies in order t demonstrate that you understand the assigned terminology in the question, an can manipulate it accurately.

You have to write effectively and use right tactics of selection, organization and expression to produc the desired response in your audience. The difference lies not to approach to writing, but in the decision you should reach. You should carefully think about the aim and audience, and then select, arrange an express your information skillfully. However, your decisions should focus as much on passing th examination as on passing information. You should focus on providing what is expected, rather than o increasing your readers' state of knowledge. You should at least increase the examiners' state o knowledge by showing that you know what they would like you to know, and that you know how t marshal and express your knowledge coherently in the forms and styles they require.

Examinations in Technical Writing

In some examinations in Technical Writing, you are asked to demonstrate your ability to fulf particular communicative tasks. For example; in questions such as summary writing, the examiner are looking not only at your use of English in writing the text, but also at your understanding o what constitutes an informative summary. Similarly, at your sense of what items of information i the full text are worthy of inclusion in the summary for the specified audience.

Regarding the questions that ask theoretical discussion of specialist content or that ask you t demonstrate your ability to fulfill particular tasks such as report writing, memo writing, writin business letter and so on; it is advised that do not start writing your answer too quickly. Plan befor you write. Plan in advance, the total time for examination that you will allot to each question. Plan t spend time for each question according to the number given in the margin of the question pape And then, only begin to construct your answer. Spend some time to outline your answer, and finall start writing your answer as clearly and simply as you can.

Article Writing

An article is a piece of writing usually intended for publication in a newspaper, magazine or journa It is written for a wide audience, so it is essential to attract and retain the readers' attention. It ma include amusing stories, reported speech and descriptions. It can be formal or informal, dependin on the target audience. The articles should be written in an interesting or entertaining manner. I should give opinions and thoughts, as well as facts. It is in a less formal style than a report. An artic can describe an experience, event, person or place, present an opinion or balanced argumen compare and contrast. It also provides information, offers suggestions and advice.

Scanned with CamScanner

Parts of an Article

An article should have an eye-catching title which attracts the readers' attention and suggests the theme of the article. In addition, it should have sub-headings before each body paragraph if necessary. The title is necessary for writing an article, and should be a concise summary of the information which is going to follow in the article. In other words, the main topic of the article should be stated in the title. The parts of an article are given as below;

1. **Introduction**

   The introduction of the article should give the reader, a brief idea for the subject of discussion in the article. In the introduction, you can simply define some important terms or concepts which would be discussed in detail in the main body of the article. The introduction should ideally be a few sentences and should be in a font smaller than the title or the headline. It clearly defines the topic to be covered and keeps the reader's attention.

2. **Main Body**

   The main body is vital to other parts of the article because it is supposed to answer all the questions of the reader. The first thing to remember while writing the main body of the article is that it should be relevant to the subject or the title of the article. There are many ways of writing the body of the article and it depends largely on the topic of the article. You can write the body of the article in a question and answer format which can act as a questionnaire for the reader. This is one of the most popular, widely used and a rather systematic way of formatting the article. The body of the article can have multiple paragraphs and ideally you should have a subtitle for each of the paragraphs. It generally consists of two to five paragraphs in which the topic is further developed in detail. This will enable the reader to know at a glance of what that particular paragraph is talking about.

   You can also include a list of various important things in the body of the article. For example, while writing on a medical topic, you can have a list of the symptoms or the causes of certain diseases or disorders. The tips, certain facts, advice and solution can also be given in a list form for quick understanding. Try to answer the important questions like 'why ', 'how ', 'what ' in the body of the article. The font of the body of the article should be the same which has been used in the introduction.

3. **Conclusion**

   In the conclusion of the article, which appears at the bottom of the body, you should give a crux of the article in brief. You can also give some references and links in the case of online articles for the reader to receive more relevant information on the subject. It gives a short summary of the topic or a final opinion, recommendation or comment. In the format for writing a newspaper article, it is essential to mention the writer 's name and the date of the article in the days, months and year format. However, in academic articles, an abstract along with key words are needed. Look at the following samples of newspaper and academic articles;

Scanned with CamScanner

Sample Articles

The Himalayan Times

-7th Magh, 2077

WRITING WITH AND WITHOUT A COMPUTER

Writing has been an important aspect of our daily life. We write everyday from a small note to large books, reports, business statistics, etc. A writer is always writing books, stories, poems as a salesperson writes sales report, product data, etc. A student has to write college notes, class work, homework, etc. But, we write in two ways as writing with or without a computer.

Writing with computer is easy. It requires less effort and is fast as well. Similarly, writing with computer involves the use of computer and computer aided software tools to support writing. We can use word processors while writing documents with computer like Ms-word, Powerpoint, Excel, etc. These software make work our work easier and more accurate with the help of grammar correcting, spelling checking, computing, words and line counting facilities. They provide ability to get meanings of difficult words, synonymy, antonymy, etc. while writing. Similarly, writing without computer involves writing by users in their own hands without using computer software tools. It involves more time and effort than writing with computer. Pen and paper along with colouring and measuring instruments such as pencil, ruler, compass, etc. are used while writing without computer. However, computer has been a great way for doing activities in our daily life because of their efficiency, facilities and accuracy.

A person can write a document very easily within ten minutes in computer to which he would spend an hour in writing without computer. Writing with computer is more accurate than writing without computer. Furthermore, there are a lot of resources available on Internet and online which can be used in a document by a person while writing with a computer. It is not possible while writing without a computer. Writing without computer exercises person's hand, mind and develops writing speed and skills. However, a lot of people in today's world have established speed, accuracy and thought to discover more in computer as the need of 21st century.

Writing with a computer has developed rapidly and has a successful use in today's world. Writing without computer is also necessary and should not be ignored as we might be short of using our abilities one day. So, we should make a balance in the use of both writing with and without computer in our work.

WRITING WITH AND WITHOUT A COMPUTER

Abstract

There are two ways of writing as writing with and without computer. Writing with a computer is more accurate and decorative in nature. There is no problem of good and bad handwritings. The mistakes of spelling and grammar can also be solved by computer program itself. We can Google or search if the word is not understandable. Computer contains notepad, Ms-Word, PowerPoint, Excel, etc. where we can write our letters, notes, paragraphs, etc. Using computer is the best way of writing. It contains toolbar as we can colour in computer. The title can be attracted by using colour in it.

Keywords: Google, search, notepad, copy, paste, delete, forward, hard disk, software, Ms-Word, PowerPoint, Excel, toolbar, etc.

Scanned with CamScanner

Introduction

Computer is an electronic device which is more accurate and powerful than human beings. There is no comparison between writing with and without computer. Writing with a computer as word processor is the best way of writing. According to Rai (2016), "Technology is the best way to make your work easier and efficient. So, better be in the use of it (3)". It helps to reduce both technical and non-technical errors and facilitates in editing the text in more readable format. It makes easy to plan a document into different sections which can be types directly into a file. It also encourages revision and editing styles immediately after we type on the screen. In this connection Magar (2017) says, "I have been in love with the computers, as I am able to share not only my ideas but also update timely (7)". In some situations, we have to write same phrases and sentences in another paragraph or section, then it is more useful as we can use copy and paste method; however, it is impossible while writing without computer. Writing with computer facilitates auto-correction and readability with different graphics, clip arts and pictures. It is more beneficial to write with computer than handwriting.

Advantages of Writing with Computer

Writing with computer is a new approach of writing. It is suitable for every writer. It is more efficient than traditional handwritings. It makes the writing more clearer, neater and readable. It is also easy to edit and update the text with computer. The formatted document looks much attractive and can be easily forwarded through internet. It looks more official. The advantages of writing with a computer are listed below:

1. It is the fast method of writing than human hands.
2. It can correct mistakes and errors without making the document look worse.
3. It helps with more knowledge of computer skills.
4. It suggests possible words and phrases in advance.

Disadvantages of Writing with Computer

Writing with a computer may lead to dependency of the writer to the computer. The creativity of the writer may decrease. It may cause a problem to a writer if one is not familiar with technology. The written documents are always stored in hard disk; if there exist any problems in the hard disk, the documents will be deleted. Moreover, there may be memory limit in the hard disk which may cause problem while writing with computer. The disadvantages of writing with a computer are listed below:

1. It may encourage monotonous repetition in the whole text.
2. It may lead to uneconomic use of the capacities in terms of revision and reprint.
3. The ease with computer can update and add to text can lead to verbosity.
4. Any changes made between the text compels to go thoroughly again the whole text.

Advantages of Writing without Computer

Writing with a paper is a traditional approach of writing. People can express their ideas freely without any restrictions. They are not bounded by any rules or format while writing without a computer. It has become an alternative way in case of damage and loss of power in computer. The advantages of writing without a computer are listed below:

Scanned with CamScanner

1. It may increase individual creativity.
2. It costs low.
3. It does not need computer knowledge.
4. Every literate people can write easily.

Disadvantages of Writing without Computer

Writing without a computer may lead to the chances of error in spelling because no human is perfect. People may have their own kind of handwriting and it may be difficult for some readers to read and understand such writings. The disadvantages of writing without a computer are listed below;

1. It can cause physical pain in the body while writing for a long time.
2. It is time consuming and never facilitates with updates except human effort.
3. It never insists on the importance of computer in the age of science and technology.
4. It may not offer with readymade designs and styles.

Conclusion

Writing with a computer is very helpful in comparison to writing without computer. Now-a-days computers are everywhere and the world is becoming digital. However, writing without computer is also necessary and should not be ignored as we might be short of using our abilities one day. We should make a balance in the use of both writing with and without computer in our work.

References

Magar, Smreeti. *How to Write with Computer*. Kathmandu: Ekta Prakashan. (2017). Print

Rai, Samana. *Computer: A New Technology of Wrtiting*. www.rai.com/ ncit (retireved on 7 Dec, 2016). pdf.

REPORT WRITING

A report is a written statement or document prepared after a detail investigation of causes, effects and possible solutions of a given problem. The main purpose of a report preparation is to communicate its information or findings with recommendations to the concerned authority or targeted group of audience. In official term, the job of report preparation is usually understood as an assignment given to an official to prepare an authentic document on a given issue so that the prepared document may work as an instrument to facilitate the official decision making process. Report writing is different from other forms of writing because it only includes facts, not the opinion or judgment of the writer. A report is a statement of the results of an investigation or of any matter on which definite information is required. Reports are a highly structured form of writing often following conventions that have been laid down to produce a common format. Structure and convention in written reports stress the process by which the information was gathered as much as

Scanned with CamScanner

the information itself. During the time at university you may be asked to write different types of reports, depending upon the subject area which you have chosen. These could include laboratory reports, technical reports, term paper report, and reports of a work placement or industrial visit, reports of a field trip or field work. Reports vary in their purpose, but all of them will require a formal structure and careful planning, presenting the material in a logical manner using clear and concise language.

Structure of the Report

You must carefully read your course information details to ensure that you comply with what your supervisor stipulates. A report is typically made up of three main divisions: (1) preliminary material, (2) body and (3) supplementary materials. Each of the sections contains a different subsections as listed below;

(1) Preliminary material

- Title of Report
- Table of Contents (not always required)
- Abstract/Synopsis

(2) Body of report

- Introduction
- Literature Review(sometimes included in the Introduction)
- Methodology
- Results
- Discussion
- Conclusion
- Recommendations(sometimes included in the Conclusion)

(3) Supplementary material

- References or Bibliography
- Appendices

CONCLUSION

We have attempted to present different facets of communication especially technical communication. We have presented a model of communication, elements of communication and importance of communication along with 7Cs of communication. The major forms of communication along with communication barrios have been presented briefly in this unit. The styles for readability, writing elements and computer assisted guidelines have also been presented along with how to define and present any ideas descriptively. We have also briefly presented about article writing and last but not least introduced report writing very briefly at the end of the unit.

Scanned with CamScanner

REVIEW QUESTIONS

1. Define communication and highlight its importance.
2. Discuss the model of communication along with its elements briefly.
3. What are the major forms of communication? Discuss.
4. What is communication? Explain the dimensions of communication.
5. What are the 7Cs of communication? Discuss the barriers of effective communication.
6. How do you make your writing readable? Explain.
7. How would you adapt your writing with a computer? Discuss different ways of writing with a computer.
8. Discuss different elements used in technical writing.
9. Write short notes on writing in examination.
10. Prepare a newspaper article in about 250 words on 'the Use and Misuse of Internet'.

Areas for Writing

1. Write a short report on Technical Communication.
2. Write an academic article on Technical Writing.

◆◆◆

Scanned with CamScanner