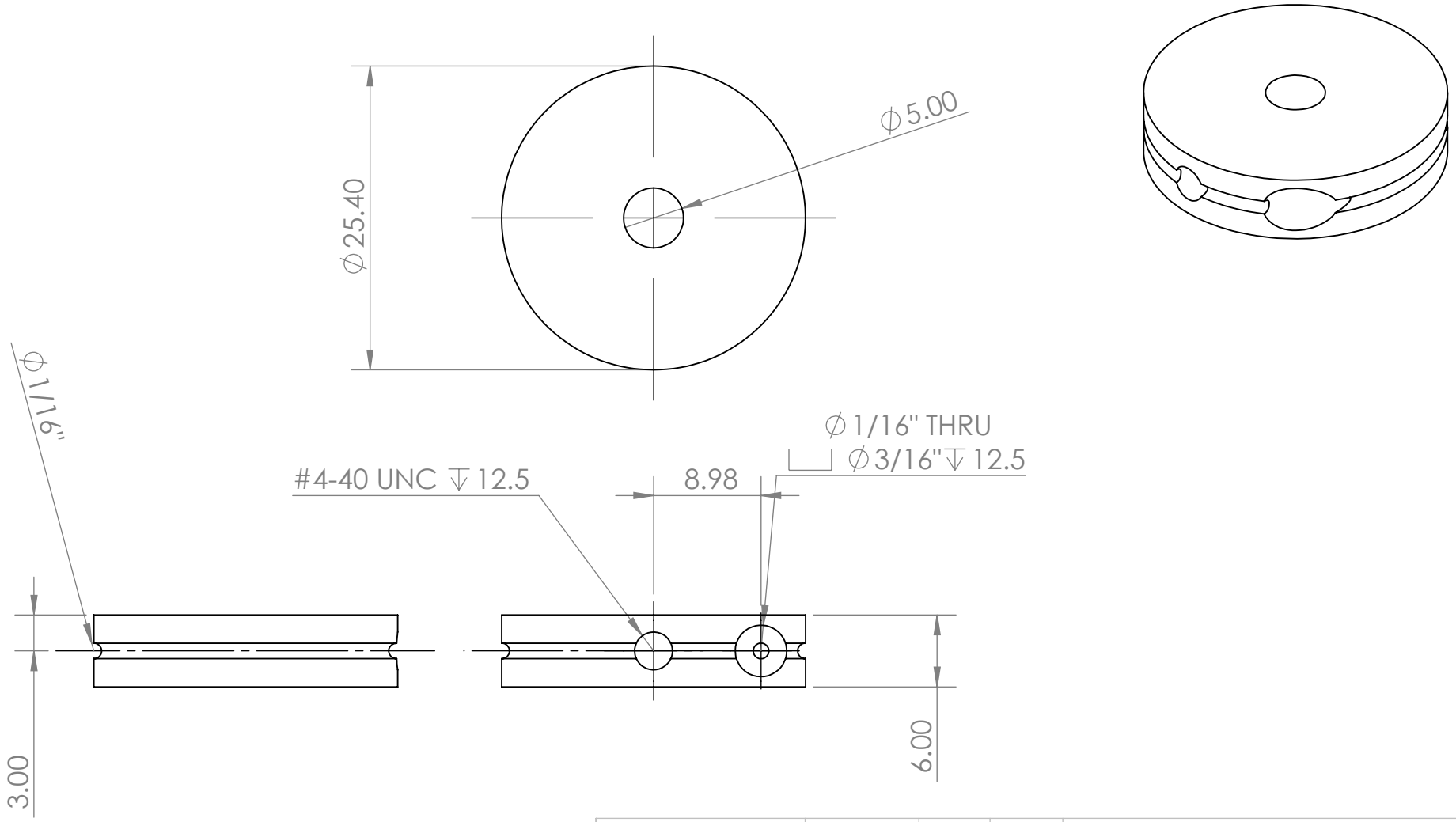

UNLESS OTHERWISE SPECIFIED:		NAME	DATE
DIMENSIONS ARE IN MM UNLESS OTHERWISE SPECIFIED. TOLERANCES: 0.0 ±0.5 0.00 ±0.05	DRAWN	IAN H	
	CHECKED		
	ENG APPR.		
	MFG APPR.		
	Q.A.		
MATERIAL: 6061 Al	COMMENTS: SIDE GROOVE MACHINED [LATHE]		
FINISH: RAW			
DO NOT SCALE DRAWING			

TITLE:

MOTOR PULLEY

SIZE	DWG. NO.	REV
A	MP001	1

SCALE: 2:1 | WEIGHT: 7.17 g | SHEET 1 OF 1