CUI Devices is now Same Sky! Learn More

SERIES: AMT10 | DESCRIPTION: MODULAR INCREMENTAL ENCODER

FEATURES

- patented capacitive ASIC technology
- low power consumption
- CMOS outputs
- 16 DIP switch selectable resolutions
- index pulse
- modular package design
- straight (radial) and right-angle (axial) versions
- 9 mounting hole options for radial version
- 8 mounting hole options for axial version
- -40~100°C operating temperature

RoHS

ELECTRICAL

parameter	conditions/description	min	typ	max	units
power supply	VDD	3.6	5	5.5	V
current consumption	with unloaded output		6		mA
output high level		VDD-0.8			V
output low level				0.4	V
output current	CMOS sink/source per channel			2	mA
rise/fall time			30		ns

INCREMENTAL CHARACTERISTICS

parameter	conditions/description	min	typ	max	units
channels	quadrature A, B, and X index				
waveform	CMOS voltage square wave				
phase difference	A leads B for CCW rotation (viewed from front)		90		degrees
quadrature resolutions[1]	48, 96, 100, 125, 192, 200, 250, 256, 384, 400, 500, 512, 800, 1000, 1024, 2048				PPR
index[2]	one pulse per 360 degree rotation				
accuracy			0.25		degrees
quadrature duty cycle (at each resolution)	256, 512, 1024, 2048	49	50	51	%
	48, 96, 100, 125, 192, 200, 250, 384, 400, 500	47	50	53	%
	800, 1000	43	50	56	%

Notes:
1. Resolution selected via adjustable DIP switch, pre-set to 2048 PPR. All resolutions are listed as pre-quadrature, meaning the final number of counts is PPR x 4.
2. Some stepper motors may leak a magnetic field causing the AMT index pulse to not function properly (non-magnetic version available with 8 pulses per revolution).

MECHANICAL

parameter	conditions/description	min	typ	max	units
motor shaft length		9			mm
motor shaft tolerance			NOM +0/-0.015		mm
weight	AMT102 AMT103		20.5 14.0		g g
axial play				±0.3	mm
rotational speed (at each resolution)	192, 384, 400, 500, 800, 1000, 1024, 2048			7500	RPM
	48, 96, 100, 125, 200, 250, 256, 512			15000	RPM

ENVIRONMENTAL

parameter	conditions/description	min	typ	max	units
operating temperature[1]		-40		100	°C
humidity	non-condensing			95	%
vibration	20~500 Hz, 1 hour on each XYZ			10	G
shock	11 ms, ±XYZ direction			50	G
RoHS	yes				

Note: 1. Encoders with operating temperature of -40~125°C are available as a custom order

WAVEFORMS

Figure 1
Quadrature signals with index showing counter-clockwise rotation

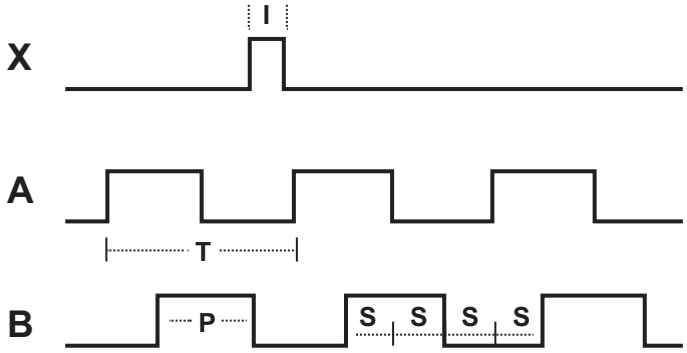

The following parameters are defined by the resolution selected for each encoder. The encoders resolution is listed as Pulses Per Revolution (PPR), which is the number of periods (or high pulses) over the encoders revolution.

Parameter	Description	Expression	Units	Notes
PPR	resolution		Pulses Per Revolution	This is the user selected value and the format all resolutions are listed in
CPR	counts	PPR x 4	Counts Per Revolution	This is the number of quadrature counts the encoder has
T	period	360/R	mechanical degrees	
P	pulse width	T/2	mechanical degrees	
S	A/B state width	T/4	mechanical degrees	This is the width of a quadrature state
I	index width	T/4	mechanical degrees	The width of a once per turn index is the state width for A & B lines

Note: For more information regarding PPR, CPR, or LPR (Lines Per Revolution) view https://www.sameskydevices.com/blog/what-is-encoder-ppr-cpr-and-lpr

PART NUMBER KEY

For customers that prefer a specific AMT10 configuration, please reference the custom configuration key below.

AMT10X - X XXXX - X XXXX - X

Base Number

Orientation:
2 = Radial
3 = Axial
*See Mechanical Drawings

Resolution Option:
"blank" = fixed resolution
D = adjustable resolution

Resolution[1] (ppr):

0048	0384
0096	0400
0100	0500
0125	0512
0192	0800
0200	1000
0250	1024
0256	2048

Index Pulse:
I = single index pulse per revolution
N = 8 index pulses per revolution

Sleeve Bore Diameter:
2000 = 2 mm
3000 = 3 mm
3175 = 3.175 mm (1/8")
4000 = 4 mm
4760 = 4.76 mm (3/16")
5000 = 5 mm
6000 = 6 mm
6350 = 6.35 mm (1/4")
8000 = 8 mm

Mounting Base:
S = Standard
W = Wide (AMT102 only)

Note: 1. Fixed resolutions are permanently set at this value; adjustable resolutions are preset via DIP switch to this value upon shipment.

AMT10-V KITS

In order to provide maximum flexibility for our customers, the AMT10 series is provided in kit form standard. This allows the user to implement the encoder into a range of applications using one sku#, reducing engineering and inventory costs.

ORDERING GUIDE

AMT10X-V

Orientation:
2 = Radial
3 = Axial
*See Mechanical Drawings

SLEEVES

8mm	1/4 inch (6.35mm)	6mm	5mm	3/16 inch (4.76mm)	4mm	1/8 inch (3.175mm)	3mm	2mm
Blue	Snow	Red	Green	Yellow	Gray	Purple	Orange	Light Sky Blue

102 BASE

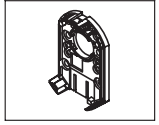

102 WIDE BASE

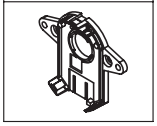

102 TOP COVER

SHAFT ADAPTER

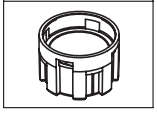

103 BASE

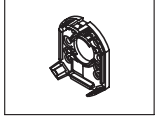

103 TOP COVER

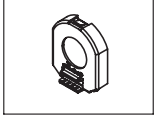

TOOL A

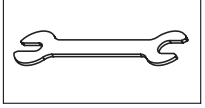

TOOL B

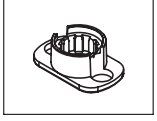

RESOLUTION SETTINGS

1 = On, 0 = Off

Resolution (PPR)	Maximum RPM	1	2	3	4
2048	7500	0	0	0	0
1024	7500	0	0	1	0
1000	7500	1	0	0	0
800	7500	0	1	0	0
512	15000	0	0	0	1
500	7500	1	0	1	0
400	7500	0	1	1	0
384	7500	1	1	0	0
256	15000	0	0	1	1
250	15000	1	0	0	1
200	15000	0	1	0	1
192	7500	1	1	1	0
125	15000	1	0	1	1
100	15000	0	1	1	1
96	15000	1	1	0	1
48	15000	1	1	1	1

DIP switch:
Example setting: 500 PPR

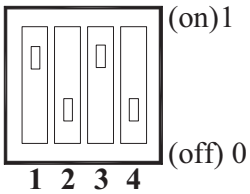

ENCODER INTERFACE

PINOUT CONNECTOR		
Function		
#	AMT102	AMT103
B	B CHANNEL	B CHANNEL
5V	+5 V	+5 V
A	A CHANNEL	A CHANNEL
X	INDEX CHANNEL	INDEX CHANNEL
G	GND	GND
T	UNUSED	N/A

AMT102

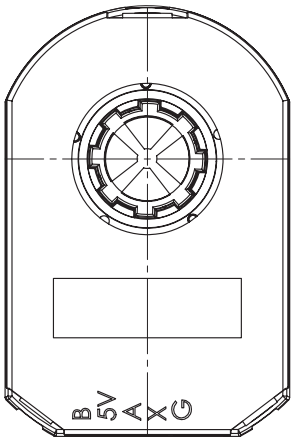

Mating Connector:
Molex 50-57-9405 Housing
Molex 16-02-0086 Terminals

AMT103

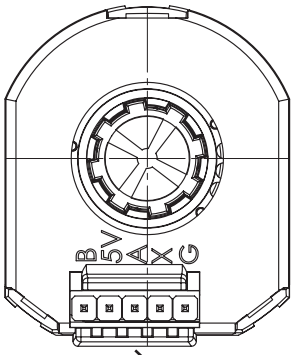

Mating Connector:
AMP 3-640440-5 (tin)
AMP 3-641237-5 (gold)

MECHANICAL DRAWING

AMT102

units: mm[inch]
tolerance: ±0.1mm

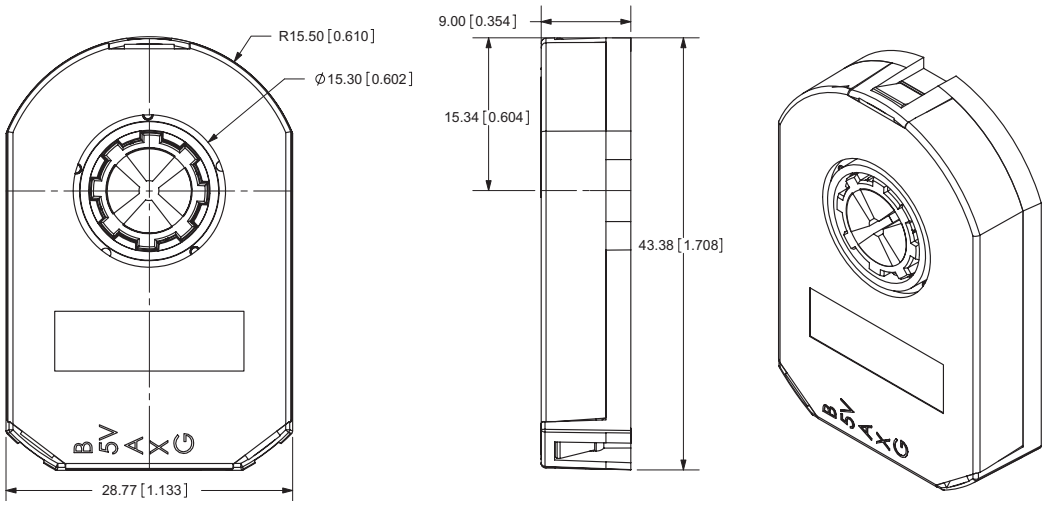

AMT102 WIDE BASE

units: mm[inch]
tolerance: ±0.1mm

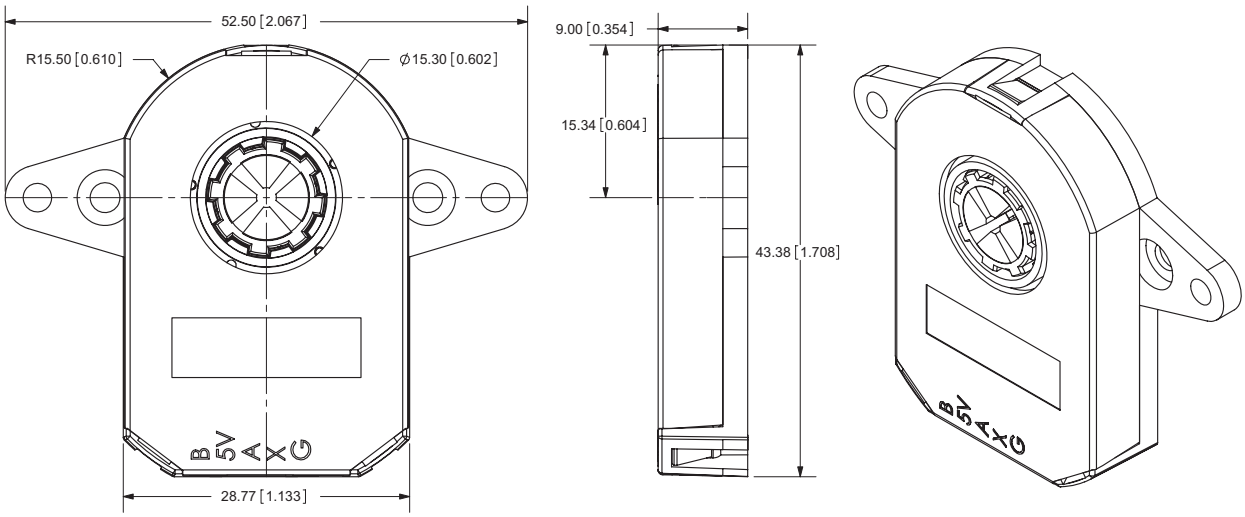

AMT103

units: mm[inch]
tolerance: ±0.1mm

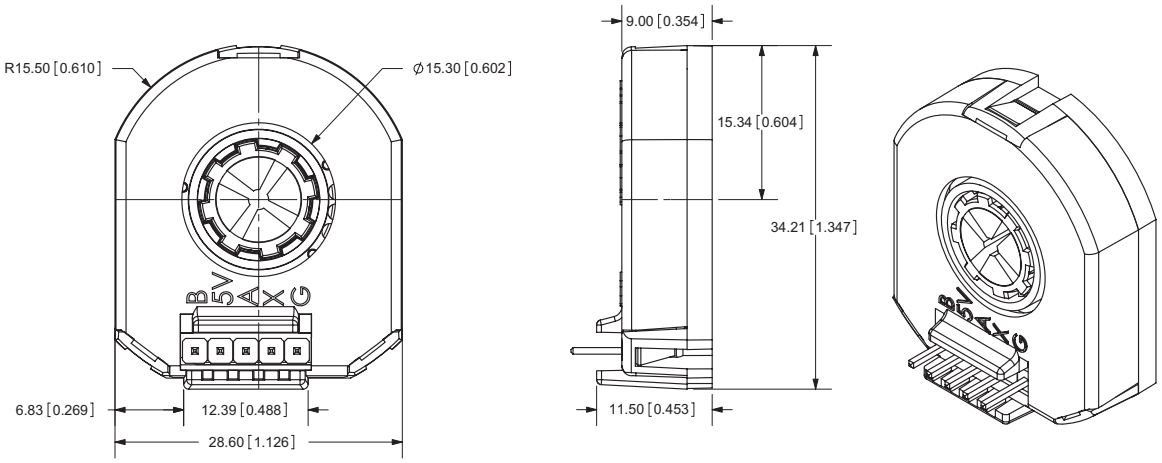

MECHANICAL DRAWING (CONTINUED)

MOUNTING HOLE PATTERNS

AMT102

units: mm[inch]
tolerance: ±0.1mm

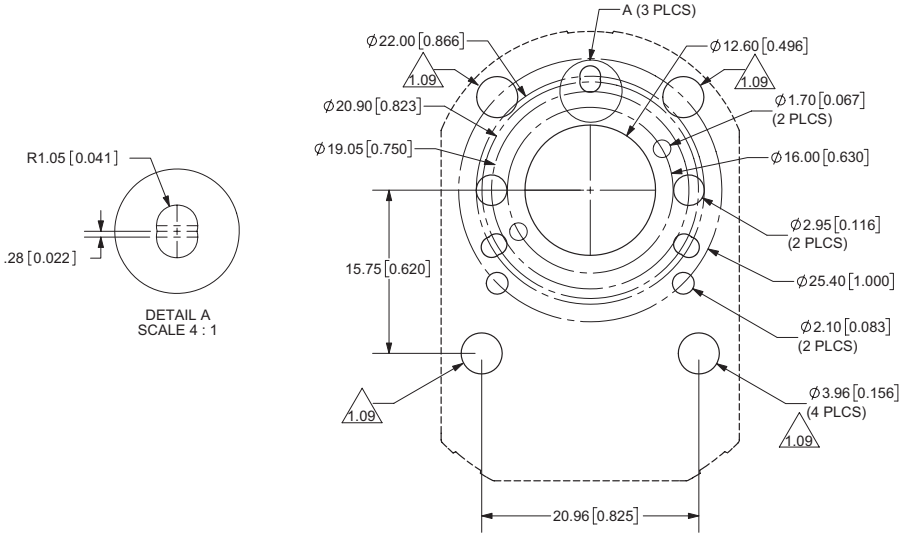

AMT102 WIDE BASE

units: mm[inch]
tolerance: ±0.1mm

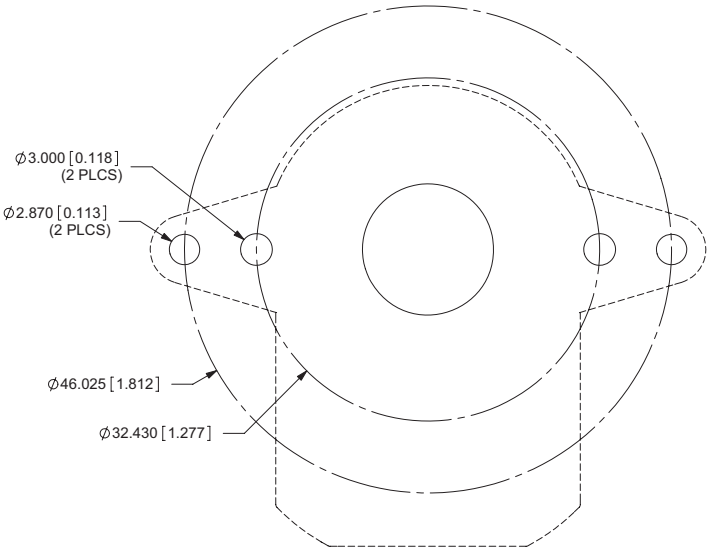

AMT103

units: mm[inch]
tolerance: ±0.1mm

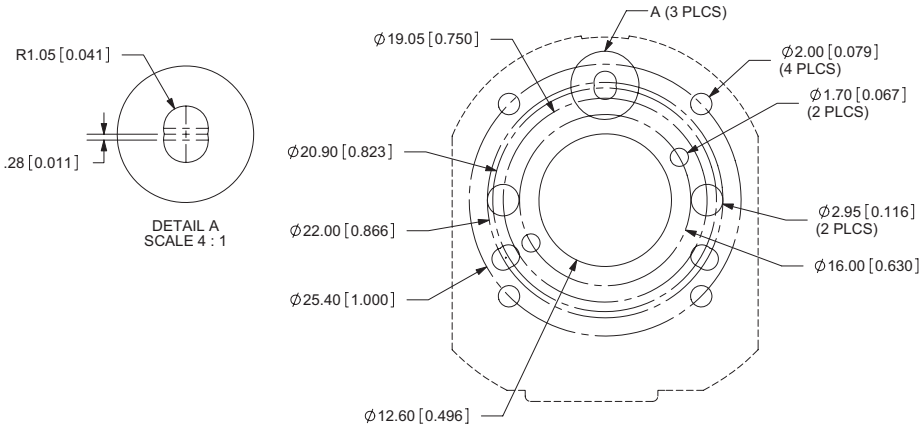

ASSEMBLY PROCEDURE

STEP 1

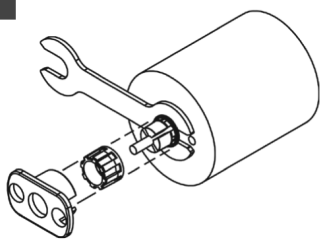

1. Insert Tool A as a spacer that defines the distance to the mounting surface.

2. Slide appropriate sized Sleeve over shaft all the way down to Tool A.

3. Slide Shaft Adaptor over Sleeve.

4. Use Tool B to press Shaft Adaptor over Sleeve until flush with Tool A.

STEP 2

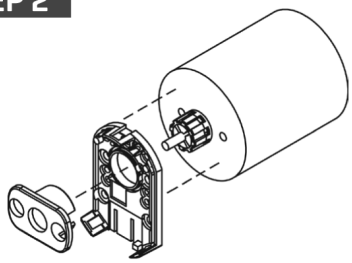

1. Remove Tools A and B.

2. Place Base on motor, with Tool B used as a centering tool.

STEP 3

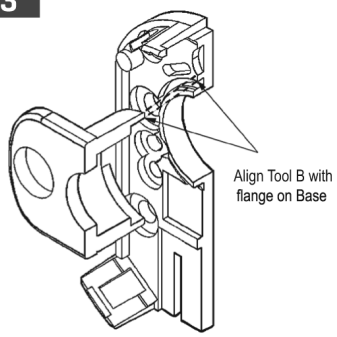

1. Align Tool B with flange on Base.

2. Slide Base and Tool B onto motor, centering onto the Shaft Adapter.

STEP 4

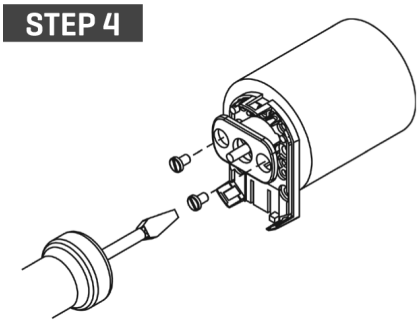

1. Fasten the Base on the motor.

2. Remove Tool B.

STEP 5

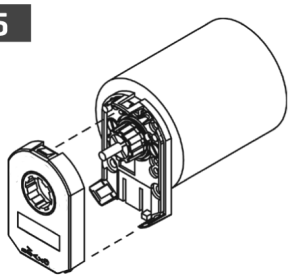

1. Slide the Top Cover onto the Base, carefully observing that the teeth of the Shaft Adaptor align with the grooves in the hub.*

* *We recommend no more than three cycles of mounting and removal of the AMT top cover base. Multiple cycles of mounting and removing the top cover can cause base fatigue over time and affect encoder performance.*

STEP 6

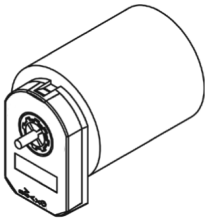

1. Make sure the snaps are fully engaged and the Top Cover is flush with the Base.

2. When assembly is finished, the Shaft Adaptor should be about flush with the front of the Encoder and the Motor Shaft should rotate freely.

REVISION HISTORY

rev.	description	date
1.0	initial release	05/04/2011
1.01	updated electrical specifications	07/11/2011
1.02	updated electrical specifications	09/16/2011
1.03	updated resolution table and electrical specifications	10/18/2012
1.04	updated part number key	11/20/2012
1.05	updated spec, updated DIP switch table	07/26/2013
1.06	updated spec	01/03/2014
1.07	updated part number key	04/14/2014
1.08	updated spec	07/18/2014
1.09	mounting holes increased to Ø3.96 mm through all, Ø5.79 x 1.02 mm counter-sink	09/04/2015
1.10	added high operating temperature range option	12/18/2017
1.11	updated spec	10/10/2018
1.12	brand update	11/21/2019
1.13	added motor shaft tolerance details	08/04/2021
1.14	logo, datasheet style update	08/05/2022
1.15	CUI Devices rebranded to Same Sky	09/12/2024

The revision history provided is for informational purposes only and is believed to be accurate.

Same Sky offers a one (1) year limited warranty. Complete warranty information is listed on our website.

Same Sky reserves the right to make changes to the product at any time without notice. Information provided by Same Sky is believed to be accurate and reliable. However, no responsibility is assumed by Same Sky for its use, nor for any infringements of patents or other rights of third parties which may result from its use.

Same Sky products are not authorized or warranted for use as critical components in equipment that requires an extremely high level of reliability. A critical component is any component of a life support device or system whose failure to perform can be reasonably expected to cause the failure of the life support device or system, or to affect its safety or effectiveness.